Micro-Tech Series

Operation Manual

Micro-Tech
600, 1200, & 2400

Micro-Tech
601, 1201, & 2401

Obtaining Other Language Versions: To obtain information in another language about the use of this product, please contact your local Crown Distributor. If you need assistance locating your local distributor, please contact Crown at 574-294-8000.

This manual does not include all of the details of design, production, or variations of the equipment. Nor does it cover every possible situation which may arise during installation, operation or maintenance.

The information provided in this manual was deemed accurate as of the publication date. However, updates to this information may have occurred. To obtain the latest version of this manual, please visit the Crown website at www.crownaudio.com.

Trademark Notice: Crown, Amcron, Crown Audio and ODEP are registered trademarks of Crown International. Grounded Bridge is a trademark of Crown International. Other trademarks are the property of their respective owners.

Some models may be exported under the name Amcron.®

©2004 by Crown Audio®, Inc. P.O. Box 1000, Elkhart, Indiana 46515-1000 U.S.A. Telephone: 574-294-8000

102990-8
06/04

A Harman International Company

Important Safety Instructions

1) Read these instructions.
2) Keep these instructions.
3) Heed all warnings.
4) Follow all instructions.
5) Do not use this apparatus near water.
6) Clean only with a dry cloth.
7) Do not block any ventilation openings. Install in accordance with the manufacturer's instructions.
8) Do not install near any heat sources such as radiators, heat registers, stoves, or other apparatus that produce heat.
9) Do not defeat the safety purpose of the polarized or grounding-type plug. A polarized plug has two blades with one wider than the other. A grounding-type plug has two blades and a third grounding prong. The wide blade or the third prong is provided for your safety. If the provided plug does not fit into your outlet, consult an electrician for replacement of the obsolete outlet.
10) Protect the power cord from being walked on or pinched, particularly at plugs, convenience receptacles, and the point where they exit from the apparatus.
11) Only use attachments/accessories specified by the manufacturer.
12) Use only with a cart, stand, bracket, or table specified by the manufacturer, or sold with the apparatus. When a cart is used, use caution when moving the cart/apparatus combination to avoid injury from tip-over.
13) Unplug this apparatus during lightning storms or when unused for long periods of time.
14) Refer all servicing to qualified service personnel. Servicing is required when the apparatus has been damaged in any way, such as power-supply cord or plug is damaged, liquid has been spilled or objects have fallen into the apparatus, the apparatus has been exposed to rain or moisture, does not operate normally, or has been dropped.
15) To reduce the risk of fire or electric shock, do not expose this apparatus to rain or moisture.

TO PREVENT ELECTRIC SHOCK DO NOT REMOVE TOP OR BOTTOM COVERS. NO USER SERVICEABLE PARTS INSIDE. REFER SERVICING TO QUALIFIED SERVICE PERSONNEL.

CAUTION
RISK OF ELECTRIC SHOCK DO NOT OPEN

À PRÉVENIR LE CHOC ÉLECTRIQUE N'ENLEVEZ PAS LES COUVERCLES. IL N'Y A PAS DES PARTIES SERVICEABLE À L'INTÉRIEUR. TOUS REPARATIONS DOIT ETRE FAIRE PAR PERSONNEL QUALIFIÉ SEULMENT.

AVIS
RISQUE DE CHOC ÉLECTRIQUE N'OUVREZ PAS

IMPORTANT

The Micro-Tech 2400/2401 requires Class 1 output wiring. The Micro-Tech 600/601/ & 1200/1201 require Class 2 output wiring.

MAGNETIC FIELD

CAUTION! Do not locate sensitive high-gain equipment such as preamplifiers or tape decks directly above or below the unit. Because this amplifier has a high power density, it has a strong magnetic field which can induce hum into unshielded devices that are located nearby. The field is strongest just above and below the unit.

If an equipment rack is used, we recommend locating the amplifier(s) in the bottom of the rack and the preamplifier or other sensitive equipment at the top.

WATCH FOR THESE SYMBOLS:

The lightning bolt triangle is used to alert the user to the risk of electric shock.

The exclamation point triangle is used to alert the user to important operating or maintenance instructions.

FCC COMPLIANCE NOTICE

This device complies with part 15 of the FCC rules. Operation is subject to the following two conditions: (1) This device may not cause harmful interference, and (2) this device must accept any interference received, including interference that may cause undesired operation.

CAUTION: Changes or modifications not expressly approved by the party responsible for compliance could void the user's authority to operate the equipment.

NOTE: This equipment has been tested and found to comply with the limits for a Class B digital device, pursuant to part 15 of the FCC Rules. These limits are designed to provide reasonable protection against harmful interference in a residential installation. This equipment generates, uses, and can radiate radio frequency energy and, if not installed and used in accordance with the operation manual, may cause harmful interference to radio communications. However, there is no guarantee that interference will not occur in a particular installation. If this equipment does cause harmful interference to radio or television reception, which can be determined by turning the equipment off and on, the user is encouraged to try to correct the interference by one or more of the following measures:

- Reorient or relocate the receiving antenna.
- Increase the separation between the equipment and receiver.
- Connect the equipment into an outlet on a circuit different from that to which the receiver is connected.
- Consult the dealer or an experienced radio/TV technician for help.

Crown International, Inc.

DECLARATION of CONFORMITY

Issued By: Crown International, Inc.
1718 W. Mishawaka Road
Elkhart, Indiana 46517 U.S.A.

Sue Whitfield
574-294-8289
swhitfield@crownintl.com

European Representative's Name and Address:
Nick Owen
19 Clos Nant Coslech
Pontprennau
Cardiff
CF23 8ND United Kingdom

Equipment Type: Commercial Audio Power Amplifiers
Family Name: Micro-Tech Amplifiers
Model Names: Micro-Tech 600, 1200, 2400, 601, 1201, 2401

EMC Standards:

EN 55103-1:1995 Electromagnetic Compatibility - Product Family Standard for Audio, Video, Audio-Visual and Entertainment Lighting Control Apparatus for Professional Use, Part 1: Emissions

EN 55103-1:1995 Magnetic Field Emissions-Annex A @ 10 cm and 1 M

EN 61000-3-2:1995+A14:2000 Limits for Harmonic Current Emissions (equipment input current 16A per phase)

EN 61000-3-3:1995 Limitation of Voltage Fluctuations and Flicker in Low-Voltage Supply Systems Rated Current 16A

EN 55022:1992 + A1: 1995 & A2:1997 Limits and Methods of Measurement of Radio Disturbance Characteristics of ITE: Radiated, Class B Limits; Conducted, Class B

EN 55103-2:1996 Electromagnetic Compatibility - Product Family Standard for Audio, Video, Audio-Visual and Entertainment Lighting Control Apparatus for Professional Use, Part 2: Immunity

EN 61000-4-2:1995 Electrostatic Discharge Immunity (Environment E2-Criteria B, 4k V Contact, 8k V Air Discharge)

EN 61000-4-3:1996 Radiated, Radio-Frequency, Electromagnetic Immunity (Environment E2, Criteria A)

EN 61000-4-4:1995 Electrical Fast Transient/Burst Immunity (Criteria B)

EN 61000-4-5:1995 Surge Immunity (Criteria B)

EN 61000-4-6:1996 Immunity to Conducted Disturbances Induced by Radio-Frequency Fields (Criteria A)

EN 61000-4-11:1994 Voltage Dips, Short Interruptions and Voltage Variation

Safety Standard:

EN 60065: 1998 Safety Requirements - Audio Video and Similar Electronic Apparatus

I certify that the product identified above conforms to the requirements of the EMC Council Directive 89/336/EEC as amended by 92/31/EEC, and the Low Voltage Directive 73/23/EES as amended by 93/68/EEC.

Signed

Larry Colburn Title: Senior Vice President of Manufacturing

Date of Issue: January 1, 2001

Due to line current harmonics, we recommend that you contact your supply authority before connection.

Table of Contents

Important Safety Instructions 2
Declaration of Conformity 3
1 Welcome 5
1.1 Features 5
1.2 Unpacking Your Amplifier 5
2 How to Use This Manual 5
3 Setup 6
3.1 Unpack Your Amplifier 6
3.2 Install Your Amplifier 6
3.3 Ensure Proper Cooling 6
3.4 Choose Input Wire and Connectors 7
3.5 Choose Output Wire and Connectors 8
3.6 Wire Your System 9
3.6.1 Stereo Mode 9
3.6.2 Bridge-Mono Mode 9
3.6.3 Parallel-Mono Mode 9
3.7 Set Input Sensitivity 10
3.8 Set Ground Lift Switch 10
3.9 Connect to AC Mains 10
3.10 Startup Procedure 10
4 Operation 11
4.1 Precautions 11
4.2 Controls, Indicators and Connectors 12
4.2.1 Front Panel Facilities 12
4.2.2 Rear Panel Facilites 13
5 Advanced Features and Options 14
5.1 Protection Systems 14
5.1.1 ODEP 14
5.1.2 Ultrasonic and Radio Frequency Protection 14
5.1.3 Drive Protection 14
5.1.4 Transformer Thermal Protection 14
5.1.5 Fuses and Circuit Breakers 14
5.2 Accessories 15
5.2.1 Cooling Fan Options 15
5.2.2 Input Connectors Option 15
5.3 Filter Cleaning 15
6 Principles of Operation 16
6.1 Overview 16
6.2 Circuit Theory 16
6.2.1 Stereo Operation 17
6.2.2 Bridge-Mono Operation 18
6.2.3 Parallel-Mono Operation 18
7 Troubleshooting 19
8 Specifications 20
9 AC Power Draw and Thermal Dissipation 22
10 Service 24
10.1 Worldwide Service 24
10.2 US and Canada Service 24
10.2.1 Service at a US or Canada Service Center 24
10.2.2 Factory Service 24
10.2.3 Factory Service Shipping Instructions 24
11 Warranty 25
Crown Factory Service Information Form 27

MT-600	*1 kHz Power	**20 Hz–20 kHz Power
2 ohm Dual (per ch.)	**400W**	**335W**
4 ohm Dual (per ch.)	**325W**	**300W**
8 ohm Dual (per ch.)	**225W**	**210W**
4 ohm Bridge-Mono	**750W**	**650W**
8 ohm Bridge-Mono	**655W**	**605W**

*1 kHz Power: refers to maximum average power in watts at 1 kHz with 0.1% THD.

**20 Hz–20 kHz Power: refers to maximum average power in watts from 20 Hz to 20 kHz with 0.1% THD.

MT-1200	*1 kHz Power	**20 Hz–20 kHz Power
2 ohm Dual (per ch.)	**675W**	**585W**
4 ohm Dual (per ch.)	**480W**	**450W**
8 ohm Dual (per ch.)	**310W**	**295W**
4 ohm Bridge-Mono	**1,300W**	**1,130W**
8 ohm Bridge-Mono	**970W**	**895W**

*1 kHz Power: refers to maximum average power in watts at 1 kHz with 0.1% THD.

**20 Hz–20 kHz Power: refers to maximum average power in watts from 20 Hz to 20 kHz with 0.1% THD.

MT-2400	*1 kHz Power	**20 Hz–20 kHz Power
2 ohm Dual (per ch.)	**1,050W**	**850W**
4 ohm Dual (per ch.)	**800W**	**750W**
8 ohm Dual (per ch.)	**520W**	**505W**
4 ohm Bridge-Mono	**2,070W**	**1,670W**
8 ohm Bridge-Mono	**1,585W**	**1,485W**

*1 kHz Power: refers to maximum average power in watts at 1 kHz with 0.1% THD.

**20 Hz–20 kHz Power: refers to maximum average power in watts from 20 Hz to 20 kHz with 0.1% THD.

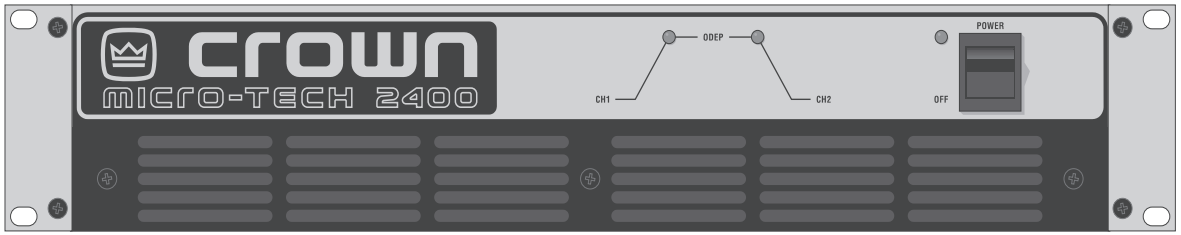

1 Welcome

The Crown® Micro-Tech 600, 1200 and 2400 are the original industry standards for touring amplifiers. Micro-Tech amplifiers are known around the world as the benchmark for high-density, ultra-pure power in a compact package. In addition, each model gives you Crown's legendary *ODEP*® protection to keep the show going long after other amplifiers would fail.

Models MT-601, 1201 and 2401(for Japan) are identical to corresponding models MT-600, 1200 and 2400.

Modern power amplifiers are sophisticated pieces of engineering capable of producing extremely high power levels. They must be treated with respect and correctly installed if they are to provide the many years of reliable service for which they were designed.

In addition, the Micro-Tech amplifiers include a number of features which require some explanation before they can be used to their maximum advantage.

Please take the time to study this manual so that you can obtain the best possible service from your amplifier.

1.1 Features

- *Grounded Bridge*™ design delivers incredible voltage swings without stressing output transistors. This results in significantly lower distortion and superior reliability.
- Patented ODEP® (Output Device Emulation Protection) circuitry compensates for overheating and overload to keep the amplifier working.
- High damping factor provides superior motion control over low-frequency drivers for clean, accurate low end.
- Two mono modes (Bridge-Mono and Parallel-Mono) for driving a wide range of load impedances.
- Full protection against shorted outputs, open circuits, DC, mismatched loads, general overheating, high-frequency overloads and internal faults.

1.2 Unpacking Your Amplifier

Please unpack and inspect your amplifier for any damage that may have occurred during transit. If damage is found, notify the transportation company immediately. Only you can initiate a claim for shipping damage. Crown will be happy to help as needed. Save the shipping carton as evidence of damage for the shipper's inspection.

We also recommend that you save all packing materials so you will have them if you ever need to transport the unit. Never ship the unit without the factory pack.

2 How to Use This Manual

This manual provides you with the necessary information to safely and correctly set up and operate your amplifier. It does not cover every aspect of installation, setup or operation that might occur under every condition. For additional information, please consult Crown's *Amplifier Application Guide* (available online at www.crownaudio.com), Crown Tech Support, your system installer or retailer.

We strongly recommend you read all instructions, warnings and cautions contained in this manual. Also, for your protection, please send in your warranty registration card today. And save your bill of sale-it's your official proof of purchase.

3 Setup

3.1 Unpack Your Amplifier

YOU WILL NEED (not supplied):

- Input wiring cables
- Output wiring cables

Rack for mounting amplifier (or a stable surface for stacking)

WARNING: Before you start to set up your amplifier, make sure you read and observe the Important Safety Instructions found at the beginning of this manual.

3.2 Install Your Amplifier

CAUTION: Before you begin, make sure your amplifier is disconnected from the power source, with power switch in the "off" position and all level controls turned completely down (counterclockwise).

Use a standard 19-inch (48.3 cm) equipment rack. See Figure 3.1 for amplifier dimensions.

You may also stack amps without using a cabinet.

NOTE: When transporting, amplifiers should be supported at both front and back.

3.3 Ensure Proper Cooling

When using an equipment rack, mount units directly on top of each other. Close any open spaces in rack with blank panels. DO NOT block front or rear air vents. The side walls of the rack should be a minimum of two inches (5.1 cm) away from the amplifier sides, and the back of the rack should be a minimum of four inches (10.2 cm) from the amplifier back panel.

Figure 3.2 illustrates standard amplifier airflow.

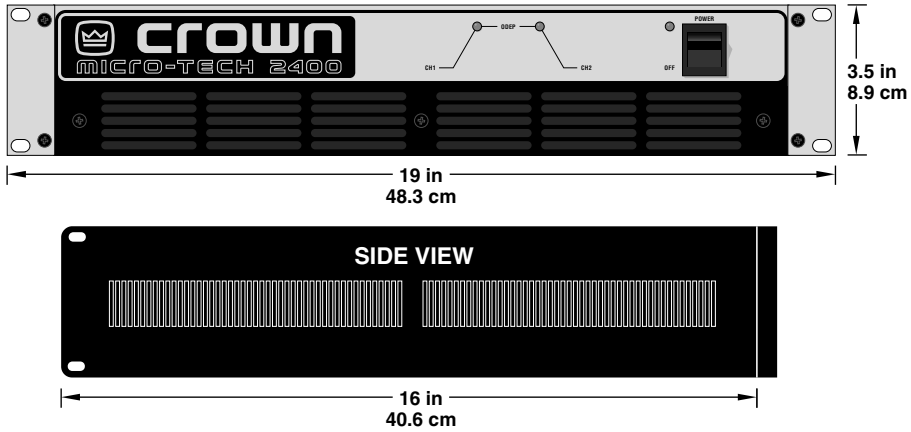

Figure 3.1 Mounting Dimensions

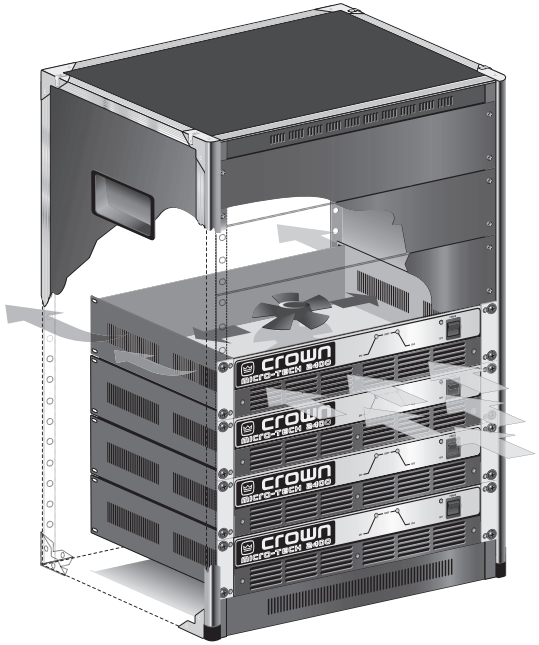

Figure 3.2 Airflow

3 Setup

3.4 Choose Input Wire and Connectors

Crown recommends using pre-built or professionally wired, balanced line (two-conductor plus shield), 22-24 gauge cables and connectors. Depending upon which amplifier input you choose, you should use either 3-pin male XLR connectors, TRS phone connectors, or terminal forks at the amplifier inputs.

Unbalanced lines may also be used but may result in noise over long cable runs.

The amplifier input connectors not used for audio signal input may be used to daisy-chain the audio signal to other components.

Figure 3.3 shows connector pin assignments for balanced wiring, and Figure 3.4 shows connector pin assignments for unbalanced wiring

NOTE: Custom wiring should only be performed by qualified personnel.

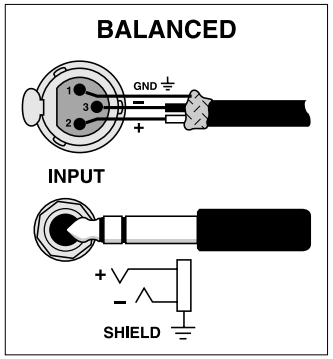

Figure 3.3 Balanced Input Connector Wiring

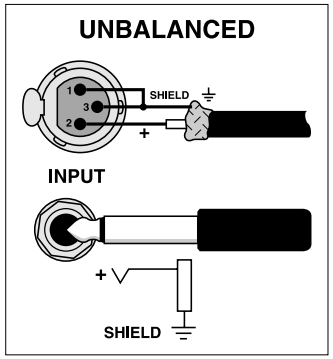

Figure 3.4 Unbalanced Input Connector Wiring

3 Setup

3.5 Choose Output Wire and Connectors

Crown recommends using pre-built or professionally wired, high-quality, two-conductor, heavy gauge speaker wire and connectors. Use banana plugs, spade lugs or bare wire for your output connectors (Figure 3.5). To prevent short circuits, wrap or otherwise insulate exposed loudspeaker cable connectors.

Using the guidelines below, select the appropriate size of wire based on the distance from amplifier to speaker.

Distance	Wire Size
up to 25 ft.	16 gauge
26-40 ft.	14 gauge
41-60 ft.	12 gauge
61-100 ft.	10 gauge
101-150 ft.	8 gauge
151-250 ft.	6 gauge

CAUTION: Never use shielded cable for output wiring.

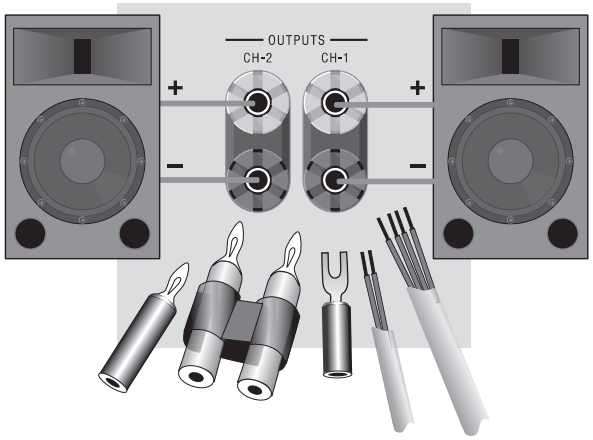

Figure 3.5 Output Connections

3 Setup

3.6 Wire Your System

3.6.1 Stereo Mode

Typical input and output wiring is shown in Figure 3.6. Turn off the amplifier, and set the Stereo/Mono mode switch on the back to Stereo.

INPUTS: Connect input wiring for both channels.

OUTPUTS: Maintain proper polarity (+/-) on output connectors.

Connect Channel 1 positive (+) speaker load to Channel 1 positive terminal of amp; repeat for negative (-). Repeat Channel 2 wiring as for Channel 1.

3.6.2 Bridge-Mono Mode

Typical input and output wiring is shown in Figure 3.6. Turn off the amplifier, and set the Stereo/Mono mode switch on the back to Bridge Mono.

INPUTS: Connect input wiring to Channel 1 only.

OUTPUTS: Connect the speaker across the positive (red) terminals of each channel. Do not use the negative terminals when the amp is being operated in Bridge-Mono mode. The load must be balanced so neither lead is connected to ground.

CAUTION: Connect only balanced equipment (meters, switches, etc.) to the Bridge-Mono output. Both sides of the line must be isolated from the input grounds or oscillations may occur.

NOTE: To prevent distortion and low levels, the Channel 2 level control should be set fully counter-clockwise when operating the amplifier in Bridge-Mono mode.

NOTE: Crown provides a reference of wiring pin assignments for commonly used connector types in the Crown Amplifier Application Guide (Section 1.21.) available at www.crownaudio.com.

3.6.3 Parallel-Mono Mode

Typical input and output wiring is shown in Figure 3.6. Turn off the amplifier, and set the Stereo/Mono mode switch on the back to Parallel Mono. Turn down the Channel 2 level control.

INPUTS: Connect input wiring to Channel 1 only.

OUTPUTS: Connect positive (+) speaker load to amplifier Channel 1 red (+) binding post. Connect negative (-) speaker load to amplifier Channel 1 black (-) binding post. Add a 14 gauge (or larger) jumper wire between the red (+) binding posts of both channels 1 and 2.

CAUTION: When the amplifier is wired for Parallel-Mono mode, do not change the rear switch to Stereo or Bridge-Mono. Doing that will result in inefficient operation, high distortion and excessive heating.

NOTE: Crown provides a reference of wiring pin assignments for commonly used connector types in the Crown *Amplifier Application Guide* (Section 1.21.) available at www.crownaudio.

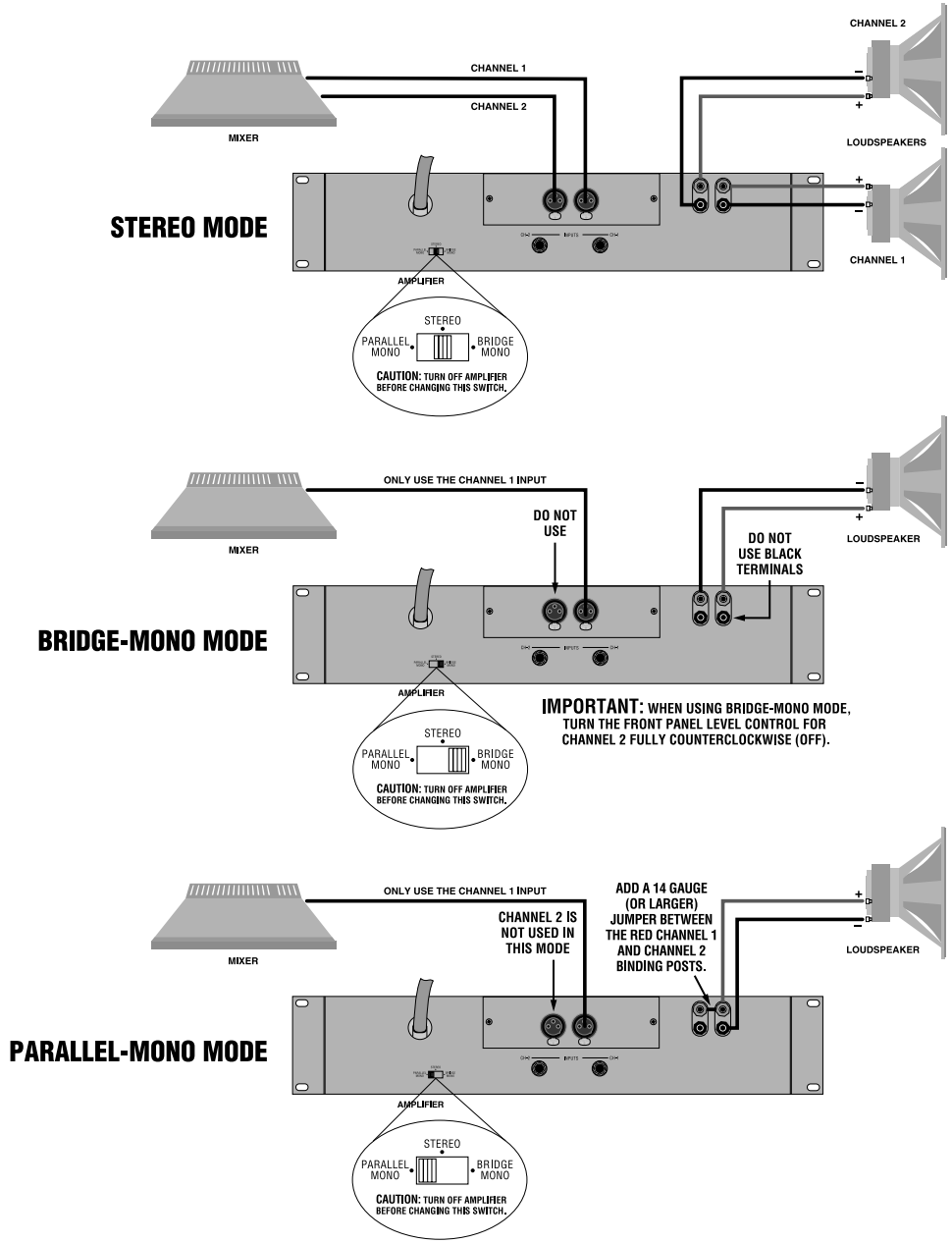

Figure 3.6 Three System Connection Methods

3 Setup

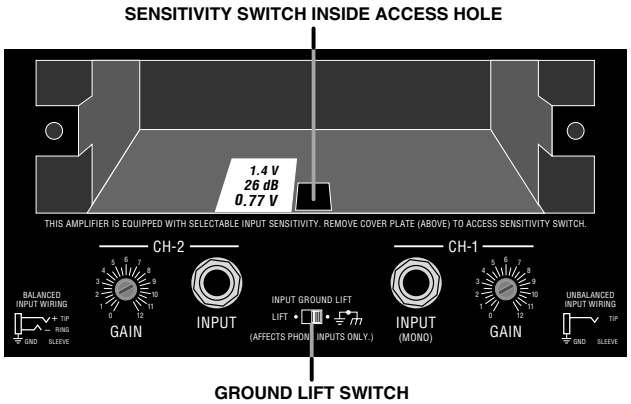

Figure 3.7 Input Sensitiviy and Ground Lift Switches

3.7 Set Input Sensitivity

The three-position input sensitivity switch is located inside the amplifier behind the MT-XLR module (Figure 4.2 letter "I"). The switch is set at the factory to a sensitivity of 0.775 volt for standard 1 kHz power into 8 ohms. (Factory setting for International versions is 1.4 V.) If desired, the sensitivity can be switched to 1.4 volts for standard 1 kHz power into 8 ohms, or a voltage gain of 26 dB. The 26 dB gain setting is equivalent to a sensitivity of 2.1 volts for the Micro-Tech 600, 2.5 volts for the Micro-Tech 1200 and 3.2 volts for the Micro-Tech 2400.

To change the input sensitivity:

1. Remove the back panel cover plate (or input connector accessory).

2. Locate the access hole for the sensitivity switch inside the chassis opening (Figure 3.7). The sensitivity switch will not be visible because it is mounted below the hole. Use your little finger to reach it.

3. Set the switch to the desired position noted on the label beside the access hole.

4. Replace the back panel cover plate (or input connector accessory).

3.8 Set Ground Lift Switch

The **ground lift switch** (Figure 3.7) is located on the back panel and can isolate the input signal grounds from the AC (chassis) ground. It affects only the phone jack inputs and has no effect on accessory input connectors. Sliding the switch to the left isolates or "lifts" the grounds by placing an impedance between the sleeve of each phone jack and the AC ground.

The Micro-Tech 2400 has two **reset switches** for its high-voltage power supplies. Refer to the Troubleshooting Section in the unusual event of a tripped breaker.

3.9 Connect to AC Mains

Connect your amplifier to the AC mains power source (power outlet) with the supplied AC power cordset.

WARNING: The third prong of the power connector (ground) is an important safety feature. Do not attempt to disable this ground connection by using an adapter or other methods.

Amplifiers don't create energy. The AC mains voltage and current must be sufficient to deliver the power you expect. You must operate your amplifier from an AC mains power source with not more than 10% variation above or below the amplifier's specified line voltage and within the specfied frequency requirements (indicated on the amplifier's back panel label). If you are unsure of the output voltage of your AC mains, please consult your electrician.

3.10 Startup Procedure

Use the following procedure when first turning on your amplifier:

1. Turn down the level of your audio source.
2. Turn down the level controls of the amplifier.
3. Turn on the "Power" switch. The Power indicator should glow.
4. Turn up the level of your audio source to an optimum level.
5. Turn up the Level controls on the amplifier until the desired loudness or power level is achieved.
6. Turn down the level of your audio source to its normal range.

If you ever need to make any wiring or installation changes, don't forget to disconnect the power cord.

For help with determining your system's optimum gain structure (signal levels) please refer to the Crown Amplifier Application Guide, available online at www.crownaudio.com.

4 Operation

4.1 Precautions

Your amplifier is protected from internal and external faults, but you should still take the following precautions for optimum performance and safety:

1. Before use, your amplifier first must be configured for proper operation, including input and output wiring hookup and Stereo/Mono-switch setting. Improper wiring can result in serious operating difficulties. In Parallel-Mono mode, a jumper is used between the red (+) Channel 1 and 2 output binding posts. To prevent distortion and overheating, remove this jumper for Bridge-Mono and Stereo modes.

   For information on wiring and configuration, please consult the Setup section of this manual or, for advanced setup techniques, consult Crown's Amplifier Application Guide available online at www.crownaudio.com.

2. Use care when making connections, selecting signal sources and controlling the output level. The load you save may be your own!

3. Do not short the ground lead of an output cable to the input signal ground. This may form a ground loop and cause oscillations.

4. **Never connect the output to a power supply, battery or power main. Electrical shock may result**.

5. Tampering with the circuitry, or making unauthorized circuit changes may be hazardous and invalidates all agency listings.

6. Do Not operate the amplifier with the ODEP LEDs turning off.

7. Do Not overdrive the mixer, which will cause clipped signal to be sent to the amplifier. Such signals will be reproduced with extreme accuracy, and loudspeaker damage may result.

8. Do Not operate the amplifier with less than the rated load impedance. Due to the amplifier's output protection, such a configuration may result in premature clipping and speaker damage.

Remember: Crown is not liable for damage that results from overdriving other system components.

4 Operation

4.2 Controls, Indicators and Connectors

4.2.1 Front Panel Facilities

A. Filter Grille

Supports and protects the dust filter (B). To clean the dust filter, detach the grille by removing the three screws that hold it in place.

B. Dust Filter

Removes large particles from the air drawn by the cooling fan. Check the filter regularly to prevent clogging. The filter can be cleaned by soaking in a mild detergent (e.g. dishwashing liquid).

C. ODEP Indicators (Output Device Emulation Protection)

During normal operation, these amber indicators glow brightly to show that reserve thermodynamic energy is present. They dim proportionally as energy reserves decrease. In the rare event that energy reserves are depleted, the ODEP indicators turn off and the protection circuitry proportionally limits output drive so the amplifier can safely continue operating even under extreme conditions. These indicators also help identify more unusual operating conditions (see Section 5.1.1 on ODEP and Section 7 on Troubleshooting).

D. Enable Indicator

Lights when the amplifier is on. AC power is available and the low-voltage power supply and fan are operational. Does not indicate the status of the high-voltage power supply (see Section 6 on Troubleshooting).

E. Power Switch

Amplifier is on when the switch is in the "on" position. When turned on, the output is muted for approximately four seconds to protect your system from start-up transients.

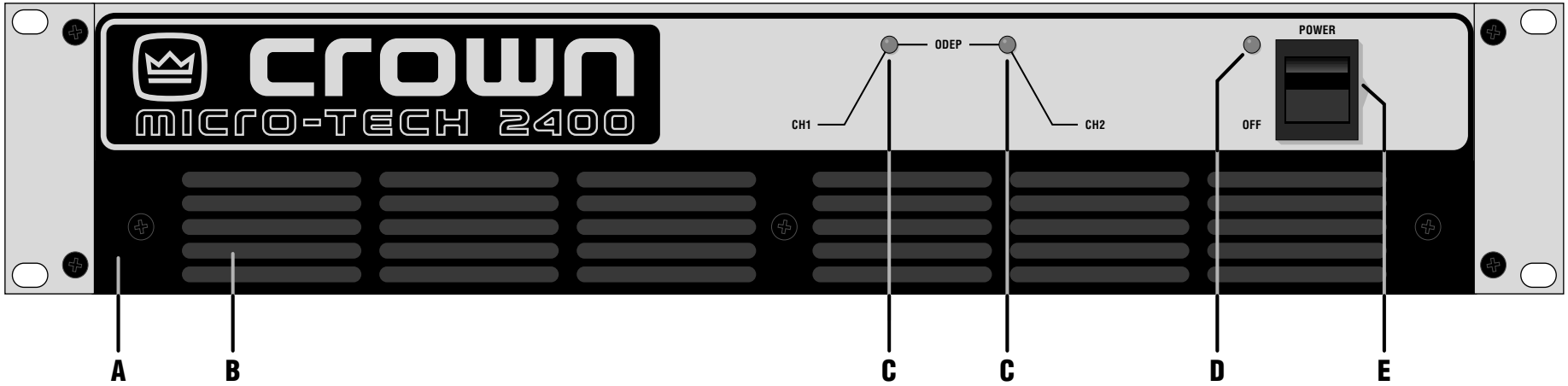

Figure 4.1 Front Panel Indicators and Grille

4 Operation

4.2.2 Rear Panel Facilities

F. Power Cord

All units are shipped with an approprate plug and cord for the required AC voltage.

G. Stereo/Mono Modes Switch

- Use Stereo mode for normal two-channel operation.
- Use Bridge-Mono mode to drive a single channel with a load impedance of at least 4 ohms.
- Use Parallel-Mono mode to drive a single channel with a load impedance less than 4 ohms.

Important: Turn off the amplifier before changing the Stereo/Mono modes switch.

H. Reset Switches (Micro-Tech 2400 only)

The Micro-Tech 2400 has two push-button reset swiches on the back panel that are used to reset the circuit breakers for the high-voltage power supplies. Refer to Section 5.1.5 in the rare event of a tripped breaker.

I. MT-XLR Module

This module provides two balanced XLR inputs. Because the MT-XLR connectors are in parallel with the amplifier's built-in phone connectors, an input signal fed to either input can be fed to another amplifier from the unused connector for that channel. If you prefer to use barrier block inputs instead, order the MT-BB accessory (see Section 5.2).

Input Sensitivity Switch

The three-position input sensitivity switch (Figure 4.2) is located inside the amplifier behind the MT-XLR module (I). See Section 3.7 for details.

J. Level Controls

Used to set the amplifier's output levels. These controls are on the back panel to prevent tampering. Be sure to turn down the Channel-2 level control (fully counterclockwise) when operating in Bridge-Mono or Parallel-Mono mode.

K. Balanced Phone Jack Inputs

A balanced ¼-inch phone jack input is provided for each channel. The jacks may be used with either balanced (tip, ring and sleeve) or unbalanced (tip and sleeve) lines (refer to Figure 3.5). Balanced XLR ijnputs for each channel are provided with the MT-XLR module. Barrier-block input connectors are available with the MT-BB accessory (see Section 5.2.2). Caution: Do not use the Channel-2 input in either mono mode.

L. Ground Lift Switch

Used to isolate the phone jack signal grounds from the AC power (chassis) ground. Moving the switch to the "lift" position helps prevent the hum associated with ground loops. Sliding the switch to the left isolates or "lifts" the grounds by placing an impedance between the sleeve of each phone jack and the AC ground.

M. Output Jacks

A pair of versatile binding posts is provided for output connection to each channel. Loudspeakers can be easily connected using banana plugs, spade lugs or bare wire (European models do not accept banana plugs). See Section 3.5.

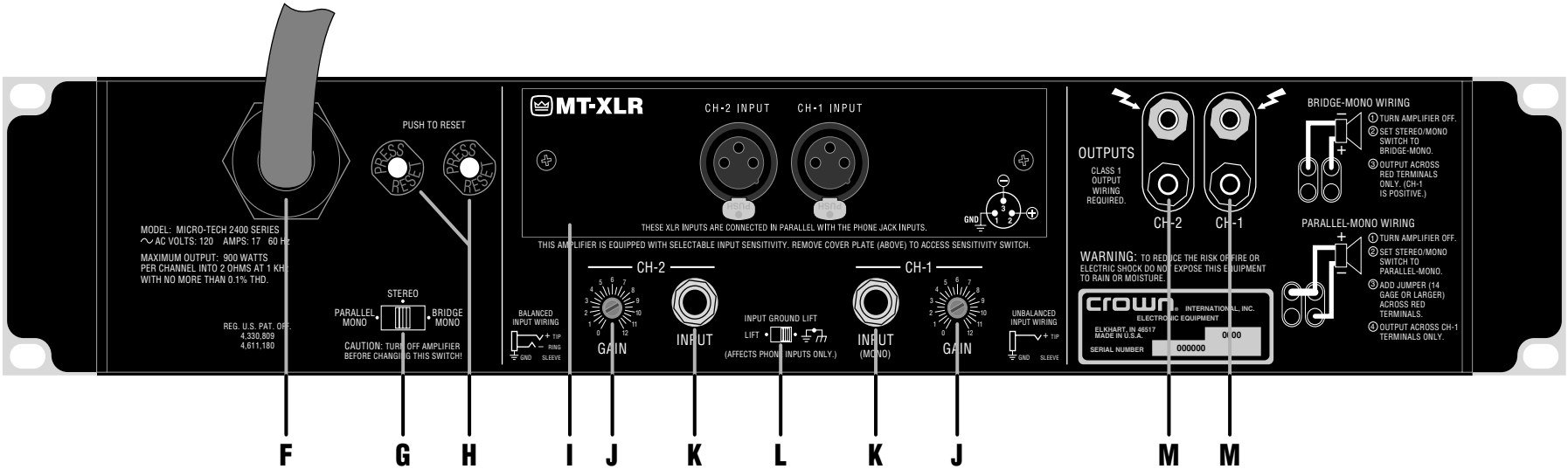

Figure 4.2 Rear Panel Connectors and Controls

5 Advanced Features and Options

NOTE: For detailed information about these Crown amplifier features, please consult the Crown Amplifier Application Guide, available on the Crown website at www.crownaudio.com.

5.1 Protection Systems

Your Crown amplifier provides extensive protection and diagnostic capabilities, including ODEP, ultrasonic/RF protection, drive protection, and power supply fuses or breakers.

5.1.1 ODEP

Crown invented ODEP to prevent amplifier shutdown during demanding operation, and to increase the efficiency of the output circuitry.

To do this, Crown measured the safe operating area (SOA) of each output transistor before installing it in an amplifier. Next, Crown designed intelligent circuitry to simulate the instantaneous operating conditions of those output transistors. Its name describes what it does: Output Device Emulation Protection or ODEP. In addition to simulating output transistor operating conditions, it compares their operation to their known SOA. If ODEP sees that more power will be asked of the output devices than they can deliver, ODEP immediately limits the drive level until it falls within the SOA. Limiting is proportional and kept to an absolute minimum — only what is required to prevent output transistor damage.

This level of protection enables Crown to increase output efficiency to never-before-achieved levels while greatly increasing reliability. The front-panel ODEP indicators show whether the amplifier is functioning correctly or whether ODEP is limiting the drive level.

5.1.2 Ultrasonic and Radio Frequency Protection

Micro-Tech amplifiers have a controlled slew rate. This means that their design puts a limit on the frequencies they can reproduce. The controlled slew rate has no effect on audio performance because the high-frequency limit is well above 20 kHz. This approach protects the amplifier and tweeters from radio frequencies. An amplifier's slew rate only needs to be large enough to deliver the maximum voltage at the highest required frequency — higher slew rates actually let the amplifier reproduce undesirable frequencies.

5.1.3 Drive Protection

This system temporarily removes drive from the output stages to protect the amplifier and its loads, and prevents oscillation. Drive protection can be activated in two situations. First, if dangerous subsonic frequencies or direct current (DC) is detected in the amplifier's output, drive protection will activate. The amplifier resumes normal operation when it no longer detects dangerous output. Activating this protection is very unlikley, but improper source signals like subsonic square waves or a severely clipped signal can activate this system.

Second, the amplifier's fault protection system puts the affected channel into drive protection mode in rare situations where heavy common-mode current is detected in its output. The amplifier should never output heavy common-mode current unless its circuitry is damaged. Activating drive protection helps prevent further damage.

5.1.4 Transformer Thermal Protection

This activates in the rare case where the unit's transformer temperature rises to unsafe levels. Then the amplifier will remove power from the affected channel's high-voltage power supply, which puts the channel in drive protection mode. The channel will return to normal operation after its transformer cools to a safe temperature.

A transformer can overheat during very severe conditions: higher than rated output levels, excessively low-impedance loads, and unreasionably high input signals.

Micro-Tech amplifiers keep working under conditions where other amplifiers would fail. But even when a Micro-Tech's limits are exceeded, it will still protect itself — and your investment — from damage.

5.1.5 Fuses and Circuit Breakers

120 VAC, 60 Hz models and all Micro-Tech 2400s have an internal fuse that protects the low-voltage power supply and cooling fan. The high-voltage power supplies for the Micro-Tech 600 and 1200 are protected by internal fuses, while the power supplies for the Micro-Tech 2400 high-voltage supplies are protected by circuit breakers.

With rated loads and output levels, the fuses (or circuit breakers) should shut down the amplfier only in the rare instance of a catastrophic failure. ODEP protection keeps the amplifier operational under most other severe conditions. The fuses (or circuit breakers) can also shut down the amplifier if extremely low-impedance loads and high output levels result in current draw that exceeds their rating. Again, this should be possible only when operating outside rated conditions, as when the amplifier is used to drive a 1-ohm load in Stereo mode, or when an input signal is clipped severely.

Micro-Tech amplifiers do not blow their fuses or trip their breakers unless something is wrong. In the rare event that an internal fuse blows, please refer the unit to a qualified technician. If a breaker in a Micro-Tech 2400 trips, try to identify and correct the problem before resetting the breakers. If the problem persists, refer the unit to a qualified technician.

5 Advanced Features and Options

5.2 Accessories

5.2.1 Cooling Fan Options

Every Micro-Tech amplifier has a built-in high-velocity fan that provides optimum cooling. Two optional replacement fan blades are available for special cooling requirments. Crown part C 6594-3 is a quieter, low-velocity fan blade that in many cases can provide adequate cooling. Crown part C 6593-5 is a reverse air flow fan blade which changes the direction of the air flow in and out of the amplifier (*not* recommended for the Micro-Tech 2400).

Important: The optional replacement fan blades should only be installed by a qualified technician.

5.2.2 Input Connectors Option

The MT-BB is an accessory panel that provides barrier-block input connectors. An MT-BB accessory might be desirable in applications requiring bare wire connections. It can also be used to daisy-chain an input signal from one amplifier to another, just like the MT-XLR.

The MT-BB must be installed at an authorized service center or the Crown factory.

5.3 Filter Cleaning

A dust filter is provided on the air intake to the cooling system (Figure 4.1, letter “B”). If this filter becomes clogged, the unit will not cool as efficiently as it should and may produce lower-than-normal output levels due to high heat-sink temperature.

To remove the filter, use a phillips screwdriver to remove the three screws that hold the front grille in place. Wash the filter with mild dish-washing detergent and warm water. Be sure to dry the filter before installing it. Replacement filters may be ordered from the factory.

Dust filters are not 100% efficient. So, depending on the local environment, the internal heat sinks of the amplifier will benefit from periodic cleaning by a qualified technician. Internal cleaning information is available from our Technical Support Group.

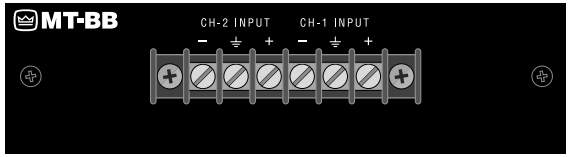

Figure 5.1 MT-BB Input Panel Accessory

6 Principles of Operation

6.1 Overview

Micro-Tech amplifiers incorporate several technological advancements including real-time computer simulation of output transistor stress, low-stress output stages and an advanced heat sink embodiment.

Custom circuitry is incorporated to limit temperature and current to safe levels making it highly reliable and tolerant of faults. Unlike many lesser amplifiers, it can operate at its voltage and current limits without self-destructing.

Micro-Tech amplifiers are protected from all common hazards that plague high-power amplifiers including shorted, open or mismatched loads; overloaded power supplies; excessive temperature, chain-destruction phenomenon, input overload and high-frequency blowups. The unit protects loudspeakers from input and output DC, as well as turn-on and turn-off transients.

Real-time computer simulation is used to create an analogue of the junction temperature of the output transistors (hereafter referred to as the output devices). Current is limited only when the device temperature becomes excessive—and only by the minimum amount required). This patented approach called Output Device Emulation Protection (or ODEP) maximizes the available output power and protects against overheating—the major cause of device failure.

Crown also invented the four-quadrant topology used in the output stages of each Micro-Tech amplifier (see Figure 6.1). This special circuitry is called the Grounded Bridge. It makes full use of the power supply by delivering peak-to-peak voltages to the load that are twice the voltage seen by the output devices.

As its name suggests, the Grounded Bridge topology is referenced to ground. Composite devices are constructed as gigantic NPN and PNP devices to handle currents which exceed the limits of available devices. Each output stage has two composite NPN devices and two composite PNP devices.

The devices connected to the load are referred to as “high-side NPN and PNP” and the devices connected to ground are referred to as “low-side NPN and PNP.” Positive current is delivered to the load by increasing conductance simultaneously in the high-side NPN and low-side PNP stage, while decreasing conductance of the high-side PNP and low-side NPN.

The two channels may be used together to double the voltage (Bridge-Mono) or current (Parallel-Mono) presented to the load. This feature gives you flexibility to maximize power available to the load.

A wide bandwidth, multiloop design is used for state-of-the-art compensation. This produces ideal behavior and results in ultra-low distortion values.

Aluminum extrusions have been widely used for heat sinks in power amplifiers due to their low cost and reasonable performance. But measured on a watts per pound or watts per volume basis, the extrusion technology doesn’t perform nearly as well as the heat sink technology developed for Micro-Tech amplifiers.

The heat sinks in a Micro-Tech amplifier are fabricated from custom convoluted fin stock that provides an extremely high ratio of area to volume, or area to weight. All power devices are mounted directly to massive heat spreaders that are electrically at the Vcc potential. Making the heat spreaders electrically alive improves thermal performance by eliminating the insulating interface underneath each power device. The chassis itself is also used as part of the thermal circuit to maximize utilization of the available resources.

6.2 Circuit Theory

Each channel is powered by its own power transformer T100 or T200. Both channels share a common low-voltage supply. The secondary output of T100 is full-wave rectified by D109 and is filtered by a large computer grade capacitor. A thermal switch embedded in the transformer protects it from overheating.

The low-voltage fanformer is rectified by diodes D1, D2, D3 and D4 to generate an unregulated 24 volts. Monolithic regulators U1 and U2 provide a regulated ±15 volts.

6 Principles of Operation

6.2.1 Stereo Operation

For simplicity, the discussion of Stereo operation will refer to one channel only. Mono operation will be discussed later. For specific circuit references, see the block diagram in Figure 6.1.

The signal at the ¼-inch phone jack input passes directly to the balanced gain stage (U104-A and U104-B). The balanced gain stage causes balanced to single-ended conversion using a difference amplifier. From there, gain can be controlled with a potentiometer. The error amp (U104-C) amplifies the difference between the output signal and the input signal from the gain pot, and drives the voltage translator stage.

From the error amp, the voltage translator stage routes the signal to the Last Voltage Amplifiers (LVAs) based on signal polarity. The +LVA (Q105) and the –LVA (Q110), with their push-pull effect through the bias servo Q318, drive the fully complementary output stage.

The bias servo Q318 is thermally coupled to the heat sink and sets the quiescent bias current in the output stage to lower the distortion in the crossover region of the output signal. D301, D302, D303, and D304 remove the charge on the unused portion of the output stage based on the polarity of the output signal.

With the voltage swing provided by the LVAs, the signal then gains current amplification through the Darlington emitter-follower output stage.

The bridge-balanced circuit (U104-D) receives a signal from the output of the amplifier and compares it to the signal at the Vcc supply. The bridge-balanced circuit then develops a voltage to drive the bridge-balanced output stage. This results in the Vcc supply having exactly one half of the output voltage added to their quiescent voltage. D309, D310, D311 and a trimmer resistor set the quiescent current point for the bridge-balanced output stage.

The protection mechanisms that affect the signal path are implemented to protect the amplifier under real-world conditions. These conditions are high instantaneous current, excessive temperature, and output device operation outside safe conditions.

Q107 and Q108 sense output current and act as a common current limiter. When instantaneous current exceeds the design criteria, the limiters remove the drive from the LVAs to limit output current to safe levels.

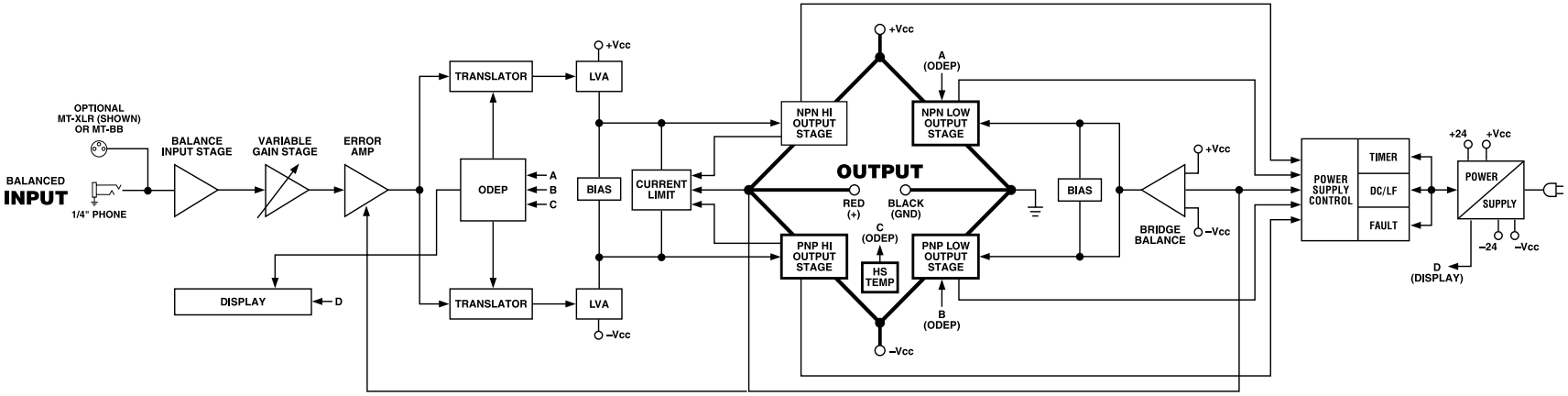

ONLY ONE CHANNEL SHOWN

Figure 6.1 Circuit Block Diagram

6 Principles of Operation

To further protect the output stages, the patented ODEP circuitry is used. It produces an analog output proportional to the always changing die temperature of the output transistor. This output controls the translator stage previously mentioned, removing any further drive that may exceed the safe operating area of the output stage.

Thermal sensors S100 and S200 give the ODEP circuits vital information on the operating temperature of the heat sink on which the output devices are mounted.

Should the amplifier fail in a way that would cause DC across the output lead, the DC protection circuit senses this on the negative feedback loop and shuts down the output stage drive until the DC is removed.

6.2.2 Bridge-Mono Operation

By setting the back panel stereo/mono switch to Bridge-Mono, you can convert a Micro-Tech amplifier for bridged-mono operation. With a signal applied to the channel 1 input and the load connected between the positive (+) output terminals, twice the voltage can be delivered to the load.

The channel 1 output feeds the channel 2 error amp U204-A. The signal feeding channel 2 is inverted so the channel 2 output will have the opposite polarity of channel 1. This makes it possible to deliver twice as much voltage to the load while the protection mechanisms for each channel continue to work independently.

6.2.3 Parallel-Mono Operation

With the stereo/mono switch set to Parallel-Mono, the output of channel 2 is paralleled with that of channel 1. A suitable jumper capable of handling high current must be connected across the positive (+) output terminals to gain the benefits of this operating mode.

The signal path for channel 1 is the same as previously discussed, except that channel 1 also drives the output stage of channel 2. The balanced input, error amp, translators, and LVAs of channel 2 are disconnected and no longer control the channel 2 output stage. The channel 2 output stage and protection mechanisms are also coupled through S1 and function as one.

In Parallel-Mono mode, the amplifier can deliver twice the current of a single channel. Because the channel 2 ODEP circuit is coupled through S1, the amplifier gains additional protection if a fault occurs in the channel 2 output stage. The channel 2 ODEP circuit will limit the output of both output stages by removing the drive from the channel 1 voltage translator.

7 Troubleshooting

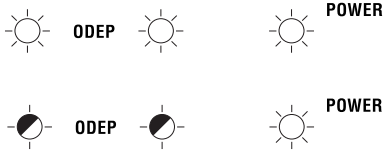

CONDITION: Normal operation.

The Enable (Power) LED is on, and the ODEP LEDs are on or flickering.

ODEP LEDs on indicates a high energy reserve. An *ODEP LED flickering* means that the energy reserve for the affected channel is dipping.

OTHER POSSIBLE CONDITIONS TO BE AWARE OF:

CONDITION: Normal LED display but distorted sound.

POSSIBLE REASON:

- Load is wired incorrectly or Stereo/Mono mode switch is set incorrectly. Check both.
- Input signal level is too high. Turn down your amplifier level controls, or turn down the input signal, until the clip LED goes out.

Check mixer levels and gain staging, mixer clip lights, and pads built into microphones.

CONDITION: Normal LED display but no sound.

POSSIBLE REASON:

- Input signal level is very low.
- Level controls are turned down.
- Input cable broken or not plugged in.
- Speakers not connected.
- The amplifier output level is so high that the breaker has tripped. Try to identify and correct the problem before resetting the breaker. If the problem persists, refer the unit to an authorized Crown Service Center.
- The amplifier output is shorted. First disconnect your speakers from the affected channel(s) one by one to determine if one of the loads is shorted.

CONDITION: Enable LED on, ODEP LEDs off, no sound. Low-voltage power supply and fan are still working.

POSSIBLE REASON:

- Transformer thermal protection has activated. Amplifier will come back on automatically when it cools.
- ODEP reserves have been depleted and the amplifier is about to activate protection.
- High-voltage power supply fuse or breaker has blown.

Check for shorts in the speaker lines. Avoid loads of 1 ohm or less. Let the amplifier cool down, then reset the breaker (Micro-Tech 2400 only).

CONDITION: All LEDs off.

POSSIBLE REASON:

- The amplifier has lost power.
- The amplifier is not plugged into the power receptacle.
- The amplifier's circuit breaker has tripped. Allow the amplifier to cool; check for shorts in the speaker lines; remove excessive loads. Then reset the breaker.
- The amplifier has blown its internal fuse for the low-voltage power. supply. Refer the unit to a qualified technician.
- The power switch is off.

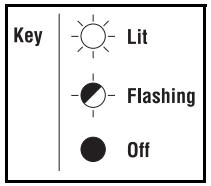

8 Specifications

Minimum Guaranteed Power	MT-600	MT-1200	MT-2400
120 VAC, 60 Hz Units, Stereo mode, per channel, both channels driven			
1 kHz with 0,1% THD			
Stereo, 2 ohms (per ch.)	400 W	675 W	1,050 W
Stereo, 4 ohms (per ch.)	325 W	480 W	800 W
Stereo, 8 ohms (per ch.)	220 W	310 W	520 W
120 VAC, 60 Hz Units, Bridge mono mode			
1 kHz with 0.1% THD			
Bridge mono, 4 ohms	750 W	1,300	2,070 W
Bridge mono, 8 ohms	655 W	970 W	1,585 W
Bridge mono, 16 ohms	450 W	620 W	1,035 W
120 VAC, 60 Hz Units, Parallel mono mode			
1 kHz with 0.1% THD			
Parallel mono, 1 ohm	700 W	1,300 W	2,080 W
Parallel mono, 2 ohms	665 W	965 W	1, 605 W
Parallel mono, 4 ohms	450 W	620 W	1, 035 W

Performance	MT-600	MT-1200	MT-2400
Frequency Response (at 1 watt, 20Hz - 20 kHz)	± 0.1 dB	± 0.1 dB	± 0.1 dB
Phase Response (at 1 watt, 20Hz - 20 kHz)	±10°	±10°	±10°
Signal to Noise Ratio below full bandwidth power			
20 Hz to 20 kHz	>100 dB	>100 dB	>100 dB
A-weighted	>105 dB	>105 dB	>105 dB
Total Harmonic Distortion (THD) at rated power, from 20 Hz to 20 kHz	0.1%	0.1%	0.1%
Intermodulation Distortion (IMD) 60 Hz and 7 kHz at 4:1, from 163 milliwatts to full bandwidth power	< 0.05%	< 0.05%	< 0.05%
Damping Factor: 10 Hz to 400 Hz	>1000	>1000	>1000
Crosstalk (below rated power, 20 Hz to 20 kHz)	> 60 dB	> 60 dB	> 60 dB
Common Mode Rejection (CMR) (20 Hz to 1 kHz)	> 70 dB	> 70 dB	>70 dB
DC Output Offset (Shorted input)	±10 mV	±10 mV	±10 mV
Input Impedance (nominally balanced, nominally unbalanced)	20 k ohms, 10 k ohms	20 k ohms, 10 k ohms	20 k ohms, 10 k ohms
Load Impedance (Note: Safe with all types of loads)			
Stereo	2-16 ohms	2-16 ohms	2-16 ohms
Bridge Mono	4 -16 ohms	4 -16 ohms	4 -16 ohms
Parallel Mono	1-4 ohms	1-4 ohms	1-4 ohms

8 Specifications

Performance	MT-600	MT-1200	MT-2400
Voltage Gain (at maximum level setting, ± 0.5 dB)			
26dB sensitivitiy	26 dB	26 dB	26 dB
0.775V sensitivity	35.0 dB	36.0 dB	38.0 dB
1.4V sensitivity	30.0 dB	31.0 dB	33.0 dB
Required AC Mains (country specific)	50/60 Hz, 100 - 240 VAC (±10%)	50/60 Hz, 100 - 240 VAC (±10%)	50/60 Hz, 100 - 240 VAC (±10%)
Power Draw at Idle	90 watts	90 watts	90 watts
Cooling	Flow-through ventilation from front to side panels. Internal heat sinks with forced air cooling.	Flow-through ventilation from front to side panels. Internal heat sinks with forced air cooling.	Flow-through ventilation from front to side panels. Internal heat sinks with forced air cooling.
Dimensions: Width, Height, Depth	EIA Standard 19 in. (48.3 cm) x 3.5 in. (8.9 cm) x 16 in. (40.6 cm)	EIA Standard 19 in. (48.3 cm) x 3.5 in. (8.9 cm) x 16 in. (40.6 cm)	EIA Standard 19 in. (48.3 cm) x 3.5 in. (8.9 cm) x 16 in. (40.6 cm)
Weight (120VAC, 60-Hz units)			
Net Weight	36 lb 4 oz (16.5 kg)	41 lb 1 oz (18.6 kg)	46 lb 14 oz (21.3 kg)
Shippping Weight	41 lb 2 oz (18.7 kg)	45 lb 3 oz (20.5 kg)	55 lb 12 oz (25.3 kg)
Weight (International units)			
Net Weight	38 lb 7 oz (17.9 kg)	41 lb 0 oz (18.6 kg)	47 lb 9 oz (21.6 kg)
Shipping Weight	44 lb 2 oz (20.0 kg)	45 lb 4 oz (20.5 kg)	56 lb 6 oz (25.6 kg)

9 AC Power Draw and Thermal Dissipation

This section provides detailed information about the amount of power and current drawn from the AC mains by Micro-Tech amplifiers and the amount of heat produced under various conditions. The calculations presented here are intended to provide a realistic and reliable depiction of the amplifiers. The following assumptions or approximations were made:

- The amplifier's available channels are loaded, and full power is being delivered.
- Amplifier efficiency at standard 1 kHz power is estimated to be 65%.
- Typical quiescent power draw for the Micro-Tech 600 is 65 watts; typical quiescent power draw for the Micro-Tech 1200 and 2400 is 80 watts.
- Quiescent thermal dissipation equals 222 btu/hr at 65 watts and 273 btu/hr at 80 watts.
- The estimated duty cycles take into account the typical crest factor for each type of source material.
- Duty cycle of pink noise is 50%.
- Duty cycle of highly compressed rock 'n' roll midrange is 40%.
- Duty cycle of rock 'n' roll is 30%.
- Duty cycle of background music is 20%.
- Duty cycle of continuous speech is 10%.
- Duty cycle of infrequent paging is 1%.

Here are the equations used to calculate the data presented in Figures 9.1, 9.2 and 9.3:

$$\text{AC Mains Power Draw (watts)} = \frac{\text{Total output power with all channels driven (watts)} \times \text{Duty Cycle}}{\text{Amplifier Efficiency (.65)}} + \text{Quiescent Power Draw (watts)}$$

The quiescent power draw figures provided in the opposite column are typical and include power drawn by the fan. The following equation converts power draw in watts to current draw in amperes:

$$\text{Current Draw (amperes)} = \frac{\text{AC Mains Power Draw (watts)}}{\text{AC Mains Voltage} \times \text{Power Factor (.83)}}$$

The power factor of 0.83 is needed to compensate for the difference in phase between the AC mains voltage and current. The following equation is used to calculate thermal dissipation:

$$\text{Thermal Dissipation (btu/hr)} = \left(\frac{\text{Total output power with all channels driven (watts)} \times \text{Duty Cycle} \times .35}{\text{Amplifier Efficiency (.65)}} + \text{Quiescent Power Draw (watts)} \right) \times 3.415$$

The constant 0.35 is inefficiency (1.00–0.65) and the factor 3.415 converts watts to btu/hr. Thermal dissipation in btu is divided by the constant 3.968 to get kcal. If you plan to measure output power under real-world conditions, the following equation may also be helpful:

$$\text{Thermal Dissipation (btu/hr)} = \left(\frac{\text{Total measured output power from all channels (watts)} \times .35}{\text{Amplifier Efficiency (.65)}} + \text{Quiescent Power Draw (watts)} \right) \times 3.415$$

9 AC Power Draw and Thermal Dissipation

Figure 9.1 Micro-Tech 600 Power Draw, Current Draw and Thermal Dissipation at Various Duty Cycles

Micro-Tech 600

	LOAD														
	8 Ohm Stereo / 16 Ohm Bridge-Mono / 4 Ohm Parallel-Mono					4 Ohm Stereo / 8 Ohm Bridge-Mono / 2 Ohm Parallel-Mono					2 Ohm Stereo / 4 Ohm Bridge-Mono / 1 Ohm Parallel-Mono				
Duty Cycle	AC Mains Power Draw (Watts)	Current Draw (Amps)		Thermal Dissipation		AC Mains Power Draw (Watts)	Current Draw (Amps)		Thermal Dissipation		AC Mains Power Draw (Watts)	Current Draw (Amps)		Thermal Dissipation	
		100-120 V	220-240 V	btu/hr	kcal/hr		100-120 V	220-240 V	btu/hr	kcal/hr		100-120 V	220-240 V	btu/hr	kcal/hr
50%	415	5.0	2.3	640	160	580	6.9	3.2	835	210	680	8.2	3.7	960	245
40%	345	4.1	1.9	555	140	475	5.7	2.6	715	180	560	6.7	3.1	810	205
30%	275	3.3	1.5	470	120	375	4.5	2.0	590	150	435	5.2	2.4	665	170
20%	205	2.5	1.1	390	100	270	3.2	1.5	470	120	315	3.7	1.7	520	130
10%	135	1.6	0.7	305	80	170	2.0	0.9	345	90	190	2.3	1.0	370	95

Figure 9.2 Micro-Tech 1200 Power Draw, Current Draw and Thermal Dissipation at Various Duty Cycles

Micro-Tech 1200

	LOAD														
	8 Ohm Stereo / 16 Ohm Bridge-Mono / 4 Ohm Parallel-Mono					4 Ohm Stereo / 8 Ohm Bridge-Mono / 2 Ohm Parallel-Mono					2 Ohm Stereo / 4 Ohm Bridge-Mono / 1 Ohm Parallel-Mono				
Duty Cycle	AC Mains Power Draw (Watts)	Current Draw (Amps)		Thermal Dissipation		AC Mains Power Draw (Watts)	Current Draw (Amps)		Thermal Dissipation		AC Mains Power Draw (Watts)	Current Draw (Amps)		Thermal Dissipation	
		100-120 V	220-240 V	btu/hr	kcal/hr		100-120 V	220-240 V	btu/hr	kcal/hr		100-120 V	220-240 V	btu/hr	kcal/hr
50%	560	6.7	3.0	845	215	830	10.0	4.5	1165	295	1120	13.5	6.1	1515	385
40%	465	5.6	2.5	730	185	680	8.2	3.7	990	250	915	11.0	5.0	1270	320
30%	370	4.4	2.0	615	155	530	6.4	2.9	810	205	705	8.5	3.9	1020	260
20%	275	3.3	1.5	505	130	380	4.6	2.1	630	160	495	6.0	2.7	770	195
10%	175	2.1	1.0	390	100	230	2.8	1.3	455	115	290	3.5	1.6	525	135

Figure 9.3 Micro-Tech 2400 Power Draw, Current Draw and Thermal Dissipation at Various Duty Cycles

Micro-Tech 2400

	LOAD														
	8 Ohm Stereo / 16 Ohm Bridge-Mono / 4 Ohm Parallel-Mono					4 Ohm Stereo / 8 Ohm Bridge-Mono / 2 Ohm Parallel-Mono					2 Ohm Stereo / 4 Ohm Bridge-Mono / 1 Ohm Parallel-Mono				
Duty Cycle	AC Mains Power Draw (Watts)	Current Draw (Amps)		Thermal Dissipation		AC Mains Power Draw (Watts)	Current Draw (Amps)		Thermal Dissipation		AC Mains Power Draw (Watts)	Current Draw (Amps)		Thermal Dissipation	
		100-120 V	220-240 V	btu/hr	kcal/hr		100-120 V	220-240 V	btu/hr	kcal/hr		100-120 V	220-240 V	btu/hr	kcal/hr
50%	880	10.6	4.8	1230	310	1315	15.8	7.2	1750	445	1695	20.4	9.3	2205	555
40%	720	8.7	3.9	1040	265	1070	12.9	5.8	1455	370	1375	16.5	7.5	1820	460
30%	560	6.7	3.1	850	215	825	9.9	4.5	1160	295	1050	12.6	5.7	1435	365
20%	400	4.8	2.2	660	165	575	6.9	3.1	865	220	730	8.7	4.0	1050	265
10%	240	2.9	1.3	465	120	330	3.9	1.8	570	145	405	4.9	2.2	660	170

10 Service

Crown amplifiers are quality units that rarely require servicing. Before returning your unit for servicing, please contact Crown Technical Support to verify the need for servicing.

This unit has very sophisticated circuitry which should only be serviced by a fully trained technician. This is one reason why each unit bears the following label:

CAUTION: To prevent electric shock, do not remove covers. No user serviceable parts inside. Refer servicing to a qualified technician.

10.1 Worldwide Service

Service may be obtained from an authorized service center. (Contact your local Crown/Amcron representative or our office for a list of authorized service centers.) To obtain service, simply present the bill of sale as proof of purchase along with the defective unit to an authorized service center. They will handle the necessary paperwork and repair.

Remember to transport your unit in the original factory pack.

10.2 US and Canada Service

Service may be obtained in one of two ways: from an authorized service center or from the factory. You may choose either. It is important that you have your copy of the bill of sale as your proof of purchase.

10.2.1 Service at a US or Canada Service Center

This method usually saves the most time and effort. Simply present your bill of sale along with the defective unit to an authorized service center to obtain service. They will handle the necessary paperwork and repair. Remember to transport the unit in the original factory pack. A list of authorized service centers in your area can be obtained from the Crown website at www.crownaudio.com, or by calling Crown Customer Service.

10.2.2 Factory Service

To obtain factory service, fill out the service information page found in the back of this manual and send it along with your proof of purchase and the defective unit to the Crown factory.

For warranty service, we will pay for ground shipping both ways in the United States. Contact Crown Customer Service to obtain prepaid shipping labels prior to sending the unit. Or, if you prefer, you may prepay the cost of shipping, and Crown will reimburse you. Send copies of the shipping receipts to Crown to receive reimbursement.

Your repaired unit will be returned via UPS ground. Please contact us if other arrangements are required.

10.2.3 Factory Service Shipping Instructions:

1. Before sending a Crown product to the factory for service, first call the Crown Service Department for a return authorization (RA) number.
2. Be sure to fill out the service information form that follows and enclose it with your shipment, either inside the box or in a packing slip envelope securely attached to the outside of the shipping carton. Do not send the service information form separately. If you are sending the unit from a Shipping Center, we recommend taping the form to the product. We also recommend recording the serial number and model before shipping for your reference.
3. To ensure the safe transportation of your unit to the factory, ship it in an original factory packing container. If you don't have the original carton, you may obtain a product service foam-in-place shipping pack from the Crown Factory Service Department at the number listed below. For non-warranty service, you may also provide your own shipping pack, however we still recommend using a Crown Supplied Shipping Container. Minimum recommended requirements for materials are as follows: 275 P.S.I. burst test Double-Wall carton that allows for 2-inch solid Styrofoam on all six sides of unit or 3 inches of plastic bubble wrap on all six sides of unit; securely seal the package with an adequate carton sealing tape. Do not use light boxes or "peanuts." Damage caused by poor packing cannot be covered under warranty.
4. Do not ship the unit in any kind of cabinet (wood or metal). Ignoring this warning may result in extensive damage to the unit and the cabinet. Accessories are not needed—do not send the product documentation, cables and other hardware.

If you have any questions, please contact Crown Factory Service.

Crown Factory Service
1718 W. Mishawaka Rd.,
Elkhart, Indiana 46517 U.S.A.

Telephone: 574-294-8200
800-342-6939 (North America, Puerto Rico, and Virgin Islands only)

Facsimile:
574-294-8301 (Technical Support)
574-294-8124 (Factory Service)

Internet:
http://www.crownaudio.com

11 Warranty

UNITED STATES & CANADA

SUMMARY OF WARRANTY

Crown International, 1718 West Mishawaka Road, Elkhart, Indiana 46517-4095 U.S.A. warrants to you, the ORIGINAL PURCHASER and ANY SUBSEQUENT OWNER of each NEW Crown product, for a period of three (3) years from the date of purchase by the original purchaser (the "warranty period") that the new Crown product is free of defects in materials and workmanship. We further warrant the new Crown product regardless of the reason for failure, except as excluded in this Warranty.

ITEMS EXCLUDED FROM THIS CROWN WARRANTY

This Crown Warranty is in effect only for failure of a new Crown product which occurred within the Warranty Period. It does not cover any product which has been damaged because of any intentional misuse, accident, negligence, or loss which is covered under any of your insurance contracts. This Crown Warranty also does not extend to the new Crown product if the serial number has been defaced, altered, or removed.

WHAT THE WARRANTOR WILL DO

We will remedy any defect, regardless of the reason for failure (except as excluded), by repair, replacement, or refund. We may not elect refund unless you agree, or unless we are unable to provide replacement, and repair is not practical or cannot be timely made. If a refund is elected, then you must make the defective or malfunctioning product available to us free and clear of all liens or other encumbrances. The refund will be equal to the actual purchase price, not including interest, insurance, closing costs, and other finance charges less a reasonable depreciation on the product from the date of original purchase. Warranty work can only be performed at our authorized service centers or at the factory. Warranty work for some products can only be performed at our factory. We will remedy the defect and ship the product from the service center or our factory within a reasonable time after receipt of the defective product at our authorized service center or our factory. All expenses in remedying the defect, including surface shipping costs in the United States, will be borne by us. (You must bear the expense of shipping the product between any foreign country and the port of entry in the United States including the return shipment, and all taxes, duties, and other customs fees for such foreign shipments.)

HOW TO OBTAIN WARRANTY SERVICE

You must notify us of your need for warranty service within the warranty period. All components must be shipped in a factory pack, which, if needed, may be obtained from us free of charge. Corrective action will be taken within a reasonable time of the date of receipt of the defective product by us or our authorized service center. If the repairs made by us or our authorized service center are not satisfactory, notify us or our authorized service center immediately.

DISCLAIMER OF CONSEQUENTIAL AND INCIDENTAL DAMAGES

YOU ARE NOT ENTITLED TO RECOVER FROM US ANY INCIDENTAL DAMAGES RESULTING FROM ANY DEFECT IN THE NEW CROWN PRODUCT. THIS INCLUDES ANY DAMAGE TO ANOTHER PRODUCT OR PRODUCTS RESULTING FROM SUCH A DEFECT. SOME STATES DO NOT ALLOW THE EXCLUSION OR LIMITATIONS OF INCIDENTAL OR CONSEQUENTIAL DAMAGES, SO THE ABOVE LIMITATION OR EXCLUSION MAY NOT APPLY TO YOU.

WARRANTY ALTERATIONS

No person has the authority to enlarge, amend, or modify this Crown Warranty. This Crown Warranty is not extended by the length of time which you are deprived of the use of the new Crown product. Repairs and replacement parts provided under the terms of this Crown Warranty shall carry only the unexpired portion of this Crown Warranty.

DESIGN CHANGES

We reserve the right to change the design of any product from time to time without notice and with no obligation to make corresponding changes in products previously manufactured.

LEGAL REMEDIES OF PURCHASER

THIS CROWN WARRANTY GIVES YOU SPECIFIC LEGAL RIGHTS, YOU MAY ALSO HAVE OTHER RIGHTS WHICH VARY FROM STATE TO STATE. No action to enforce this Crown Warranty shall be commenced after expiration of the warranty period.

THIS STATEMENT OF WARRANTY SUPERSEDES ANY OTHERS CONTAINED IN THIS MANUAL FOR CROWN PRODUCTS. 12/01

11 Warranty

WORLDWIDE EXCEPT USA & CANADA

SUMMARY OF WARRANTY

Crown International, 1718 West Mishawaka Road, Elkhart, Indiana 46517-4095 U.S.A. warrants to you, the ORIGINAL PURCHASER and ANY SUBSEQUENT OWNER of each NEW Crown1 product, for a period of three (3) years from the date of purchase by the original purchaser (the "warranty period") that the new Crown product is free of defects in materials and workmanship, and we further warrant the new Crown product regardless of the reason for failure, except as excluded in this Warranty.

1 Note: If your unit bears the name "Amcron," please substitute it for the name "Crown" in this warranty.

ITEMS EXCLUDED FROM THIS CROWN-WARRANTY

This Crown Warranty is in effect only for failure of a new Crown product which occurred within the Warranty Period. It does not cover any product which has been damaged because of any intentional misuse, accident, negligence, or loss which is covered under any of your insurance contracts. This Crown Warranty also does not extend to the new Crown product if the serial number has been defaced, altered, or removed.

WHAT THE WARRANTOR WILL DO

We will remedy any defect, regardless of the reason for failure (except as excluded), by repair, replacement, or refund. We may not elect refund unless you agree, or unless we are unable to provide replacement, and repair is not practical or cannot be timely made. If a refund is elected, then you must make the defective or malfunctioning product available to us free and clear of all liens or other encumbrances. The refund will be equal to the actual purchase price, not including interest, insurance, closing costs, and other finance charges less a reasonable depreciation on the product from the date of original purchase. Warranty work can only be performed at our authorized service centers. We will remedy the defect and ship the product from the service center within a reasonable time after receipt of the defective product at our authorized service center.

HOW TO OBTAIN WARRANTY SERVICE

You must notify your local Crown importer of your need for warranty service within the warranty period. All components must be shipped in the original box. Corrective action will be taken within a reasonable time of the date of receipt of the defective product by our authorized service center. If the repairs made by our authorized service center are not satisfactory, notify our authorized service center immediately.

DISCLAIMER OF CONSEQUENTIAL AND INCIDENTAL DAMAGES

YOU ARE NOT ENTITLED TO RECOVER FROM US ANY INCIDENTAL DAMAGES RESULTING FROM ANY DEFECT IN THE NEW CROWN PRODUCT. THIS INCLUDES ANY DAMAGE TO ANOTHER PRODUCT OR PRODUCTS RESULTING FROM SUCH A DEFECT.

WARRANTY ALTERATIONS

No person has the authority to enlarge, amend, or modify this Crown Warranty. This Crown Warranty is not extended by the length of time which you are deprived of the use of the new Crown product. Repairs and replacement parts provided under the terms of this Crown Warranty shall carry only the unexpired portion of this Crown Warranty.

DESIGN CHANGES

We reserve the right to change the design of any product from time to time without notice and with no obligation to make corresponding changes in products previously manufactured.

LEGAL REMEDIES OF PURCHASER

No action to enforce this Crown Warranty shall be commenced after expiration of the warranty period.

THIS STATEMENT OF WARRANTY SUPERSEDES ANY OTHERS CONTAINED IN THIS MANUAL FOR CROWN PRODUCTS. 7/01

Crown Factory Service Information

Shipping Address: Crown Factory Service, 1718 W. Mishawaka Rd., Elkhart, IN 46517

Phone: 1-800-342-6939 or 1-574-294-8200 Fax: 1-574-294-8124

Owner's Name : _____

Shipping Address: _____

Phone Number: _____ **Fax Number:** _____ **Email** _____

Model: _____ **Serial Number:** _____

Purchase Date : _____

NATURE OF PROBLEM

(Be sure to describe the conditions that existed when the problem occurred and what attempts were made to correct it.)

_____

_____

_____

_____

_____

_____

_____

_____

Other equipment in system: _____

_____

_____

_____

If warranty has expired, payment will be: ☐ **Cash/Check** ☐ **Visa** ☐ **Master Card** ☐ **C.O.D.** ☐ **Purchase Order for Crown Dealer**

Card Number:_____ **Exp. Date:**_____

Signature:_____

ENCLOSE THIS PORTION WITH THE UNIT. DO NOT MAIL SEPARATELY.

crown

A Harman International Company