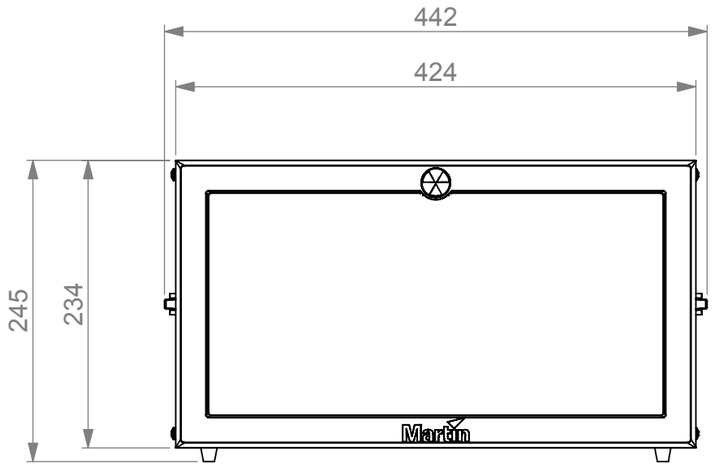

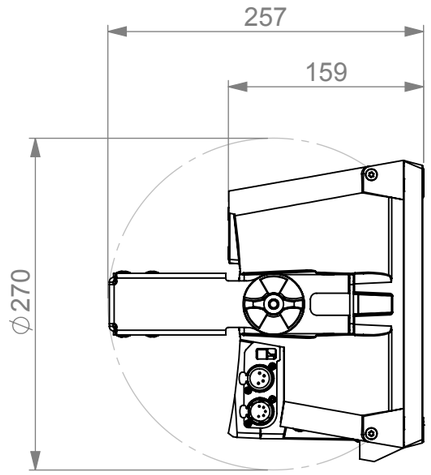

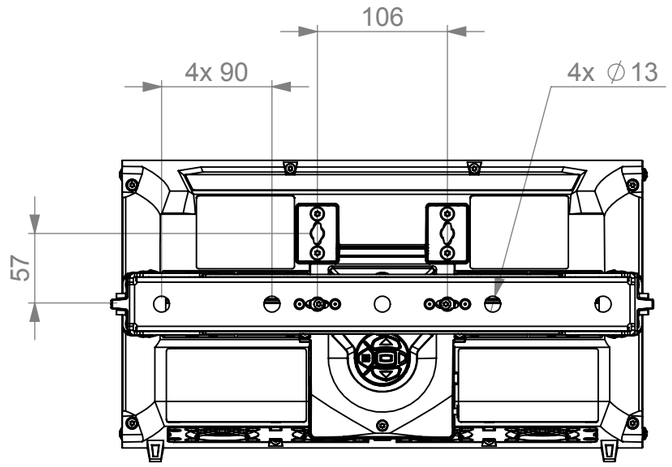

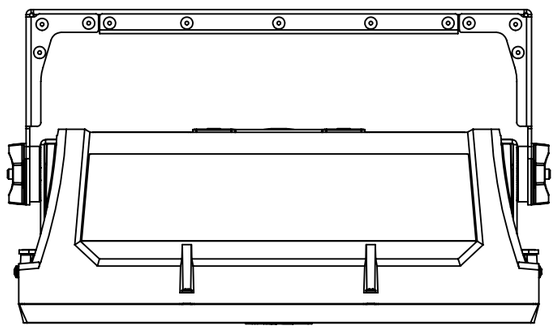

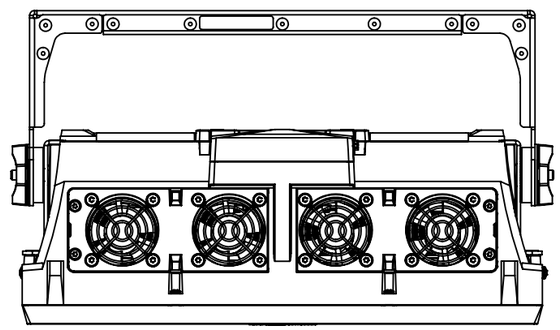

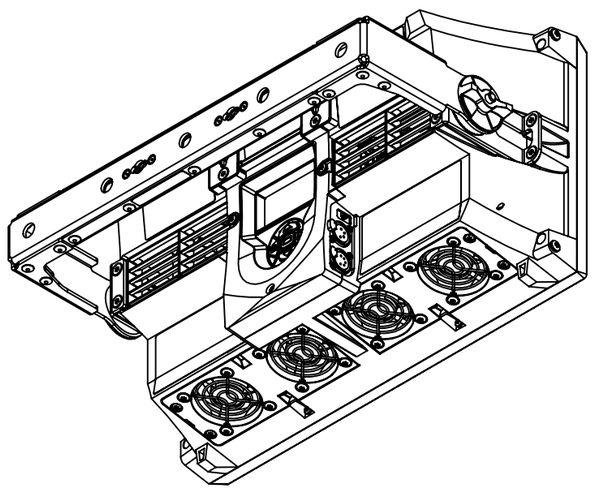

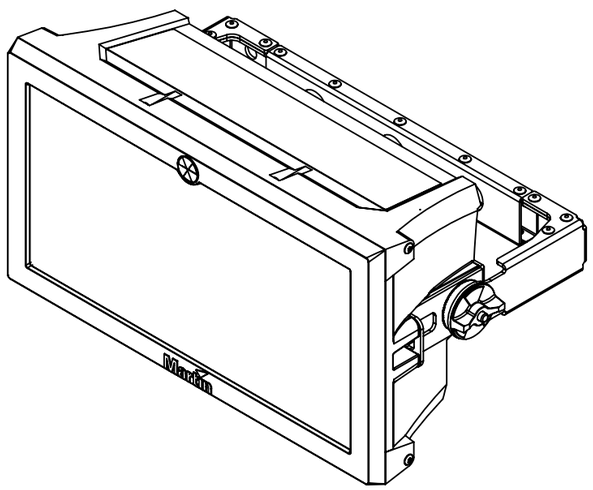

Martin by HARMAN	Format A3	Scale 1:5	Unit mm
Description Atomic 3000 LED			

© 2015 Martin Professional ApS Confidential

Martin™ General Technical Specification apply to this item