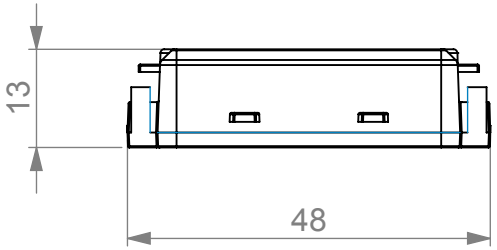

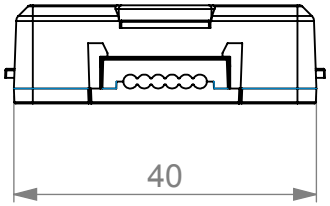

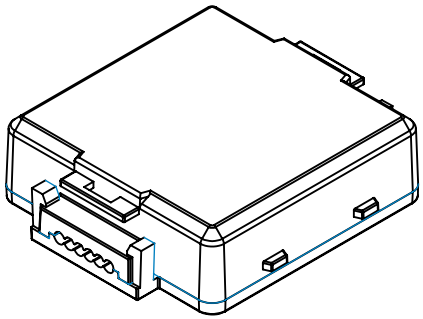

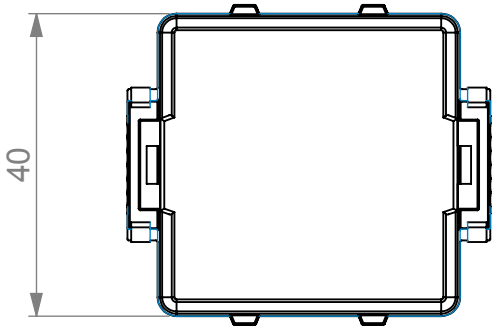

A	17.01.2013	rd_lto	DWG with dimensions
Rev.	Date	Resp.	CO no. / Comment

Martin™	First used in		Material		
Item to be			General linear tolerance		
Item to be			General angular tolerance		
Item to be		Color		Format A4	Scale 1:1	Unit mm

Description (Model in view VC-Dot 9 without Diffuser Dome)

VC-Dot 9 without Diffuser Dome

Item no.-Rev.

© 2012 Martin Professional A/S | Confidential | Martin™ General Technical Specification apply to this item