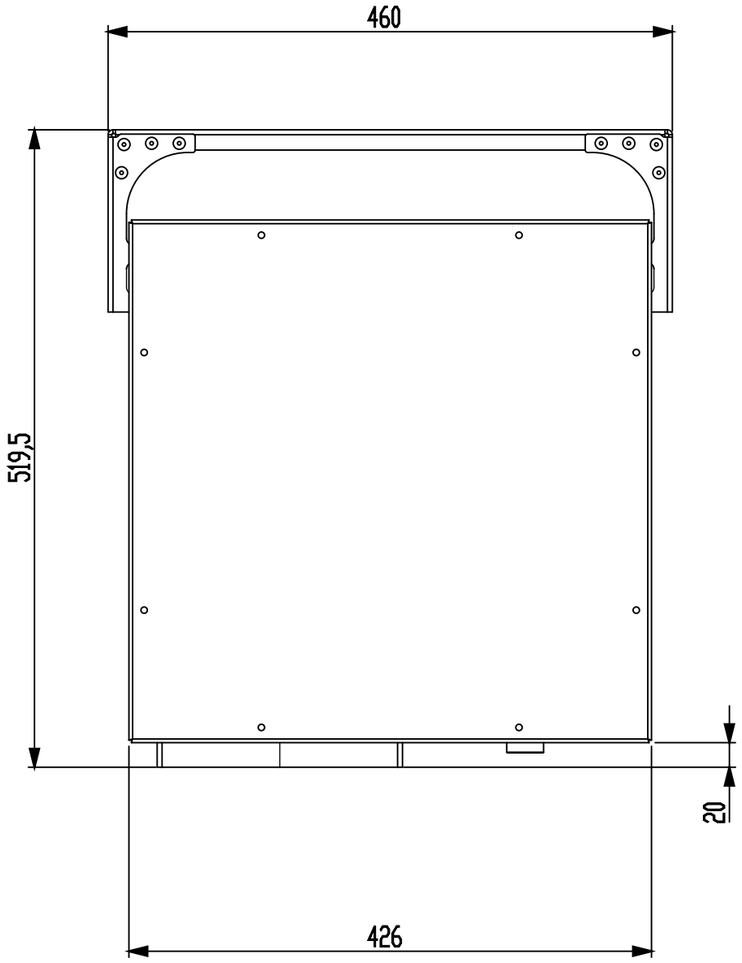


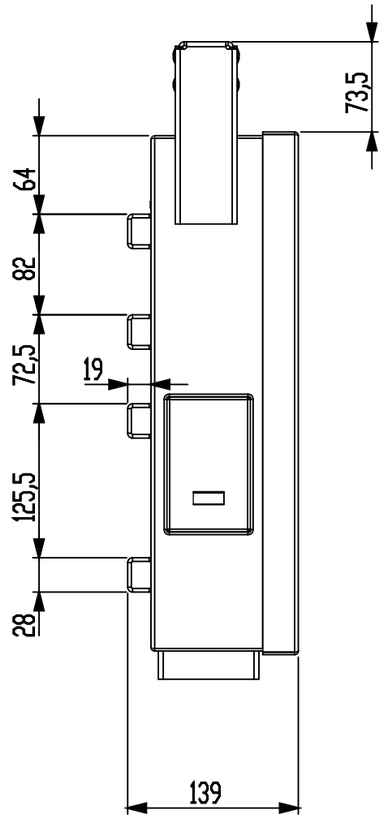


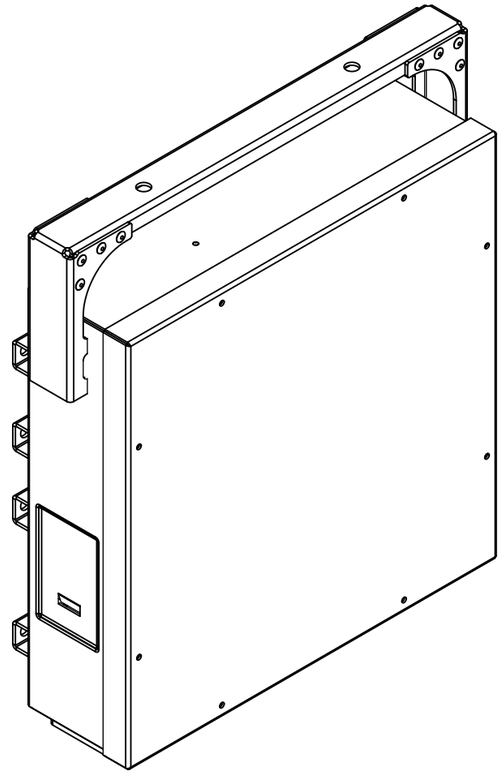

| Rev. | Date | Resp. | CI no. / Comment |
|---|---|---|---|
| | | | |
| | | | |
| | | | |
| | | | |
| | | | |
| | | | |
| | | | |
| | | | |
| | | | |
| | | | |

| | | | | |
|---|---|---|---|---|
| First used in | | | | |
| Item to be | General linear tolerance | | | |
| Item to be | General angular tolerance | | | |
| Item to be | Color | Format A3 | Scale 1:5 | Unit mm |
| Description P3 PowerPort 1000 IP Rental | | | | Item no.-Rev. |

© 2017 Martin Professional ApS | Confidential

Martin™ General Technical Specification apply to this item