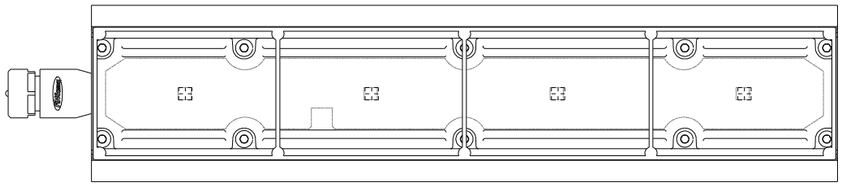

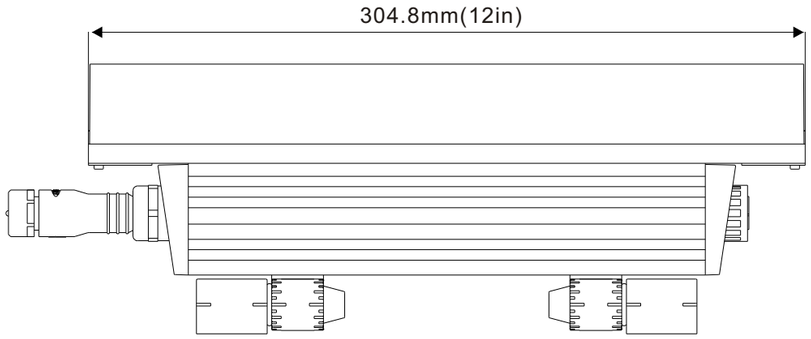

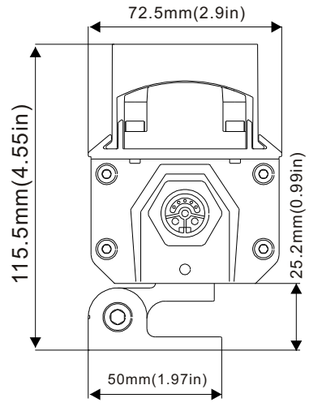

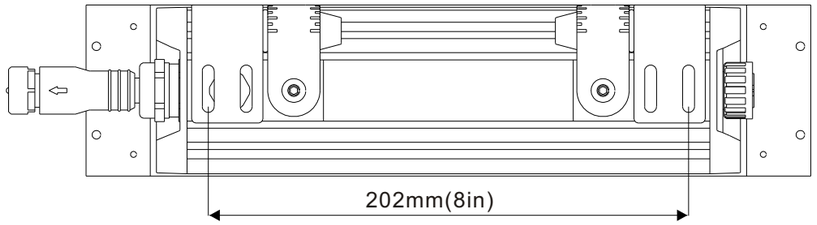

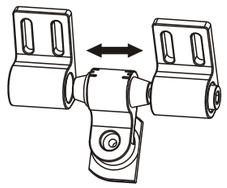

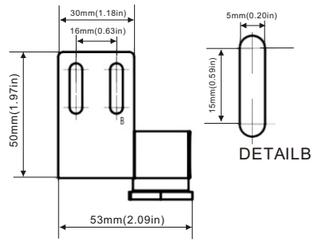

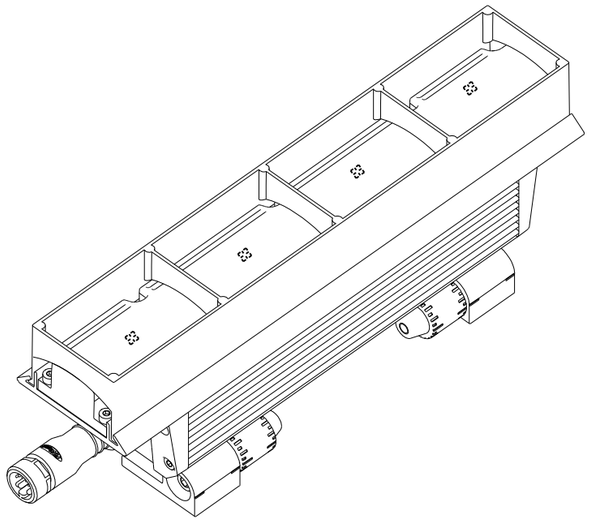

A	12.03.2018	User	First release
Rev.	Date	Resp.	CO no. / Comment

Martin HARMAN	First used in	Material		
Item to be		General linear tolerance		
Item to be		General angular tolerance		
Item to be	Color	Format A3	Scale -	Unit mm
	Description: Exterior Linear 310 Graze mounted with louvre		Item no.-Rev.	

?2018 Martin Professional ApS | Confidential

Martin?General Technical Specification apply to this item