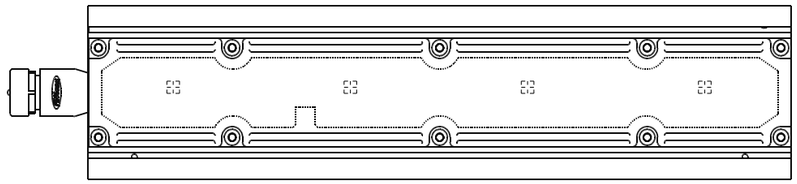

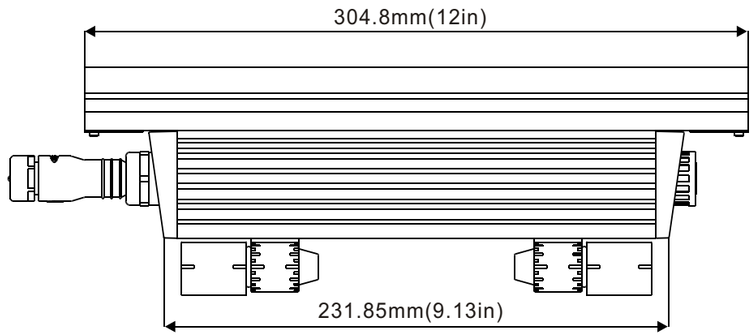

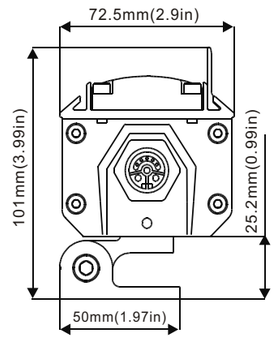

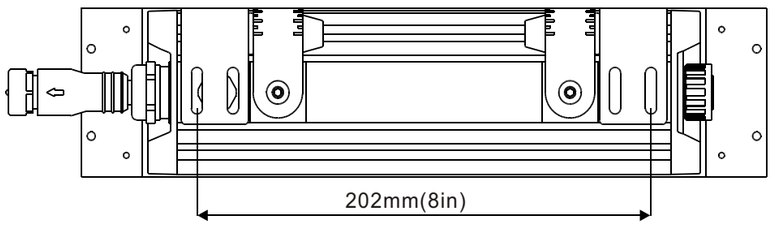

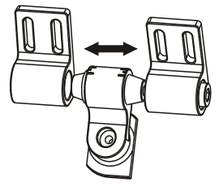

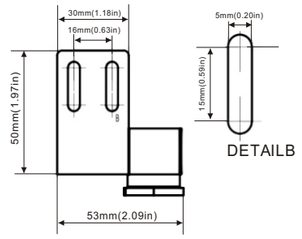

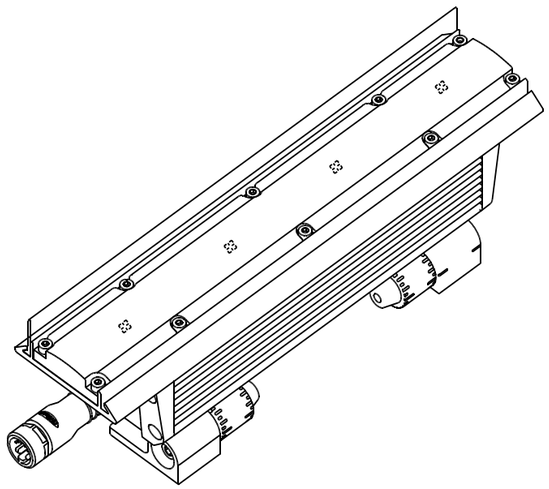

A	12.03.2018	User	First release
Rev.	Date	Resp.	CO no. / Comment

Martin HARMAN	First used in		Material	
Item to be			General linear tolerance	
Item to be			General angular tolerance	
Item to be	Color	Format A3	Scale -	Unit mm
Description: Exterior Linear 310Cove mounted with glare shield			Item no.-Rev.	

?2018 Martin Professional ApS | Confidential

Martin?General Technical Specification apply to this item