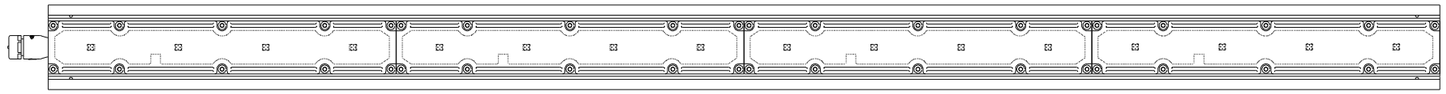

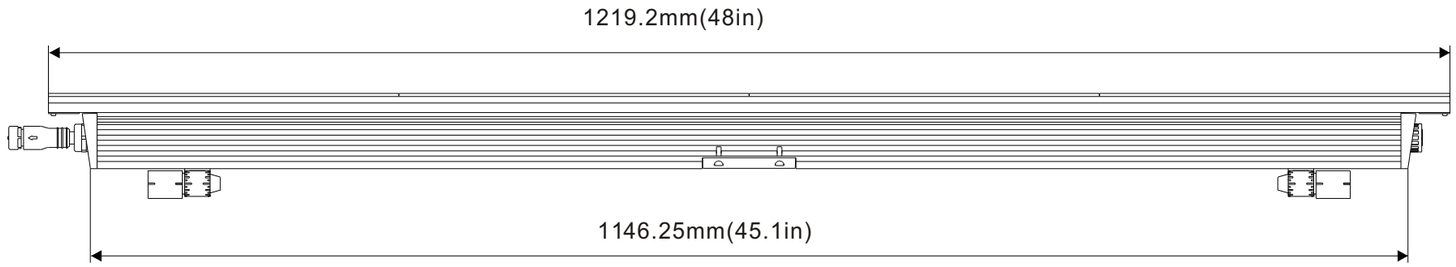

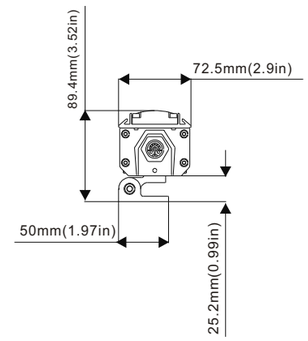

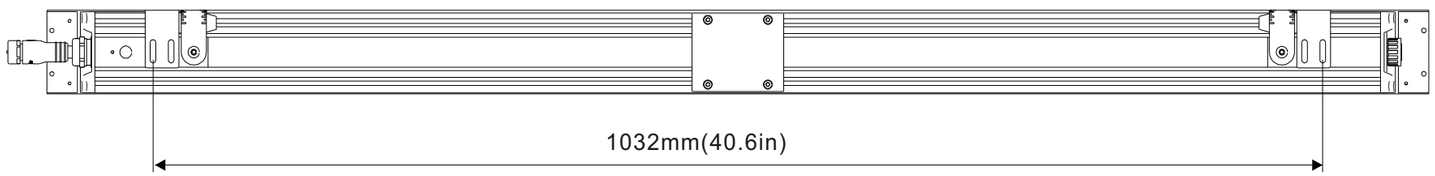

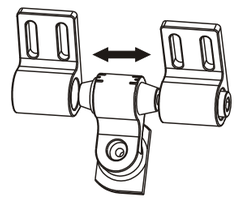

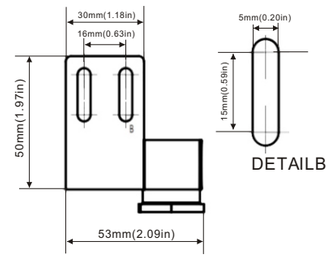

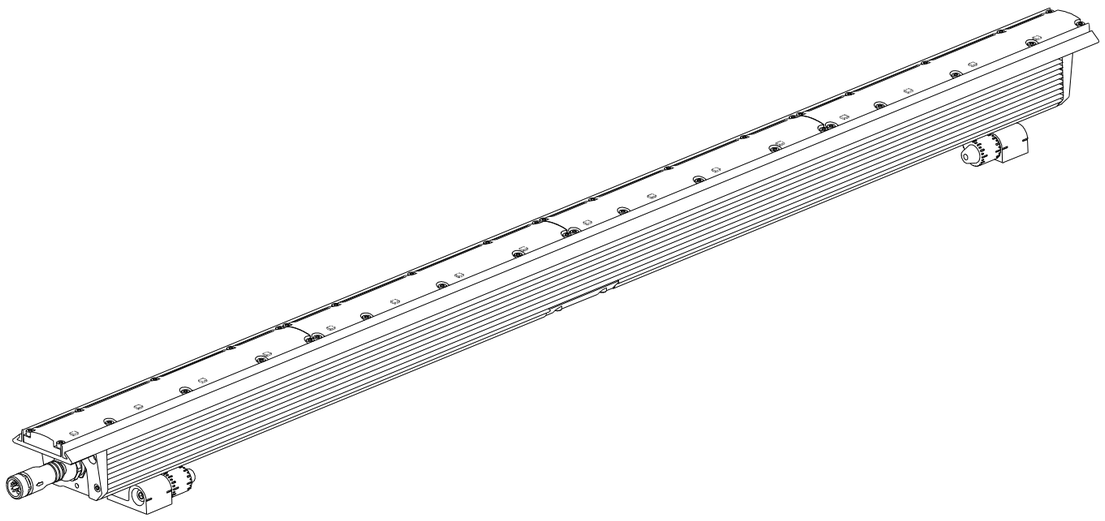

Rev.	Date	Resp.	CO no. / Comment
A	12.03.2018	User	First release

Martin HARMAN

First used in

Material

Item to be

General linear tolerance

Item to be

General angular tolerance

Item to be

Color

Format A3

Scale -

Unit mm

Description

Exterior Linear 1210 Cove

Item no.-Rev.

?2018 Martin Professional ApS Confidential

Martin?General Technical Specification apply to this item