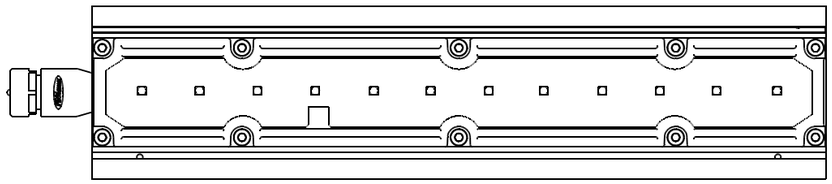

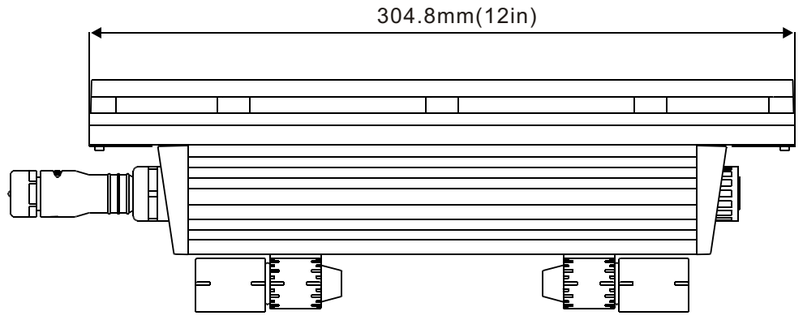

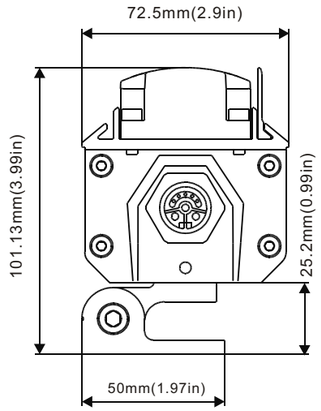

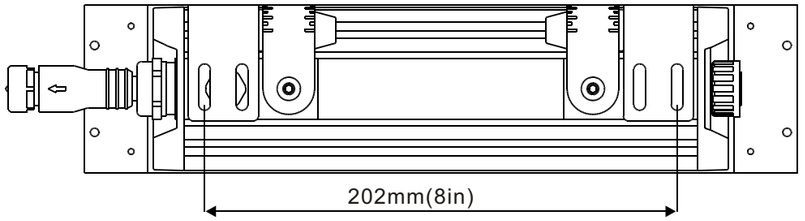

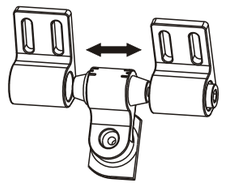

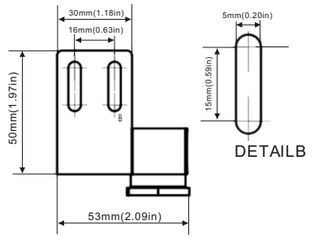

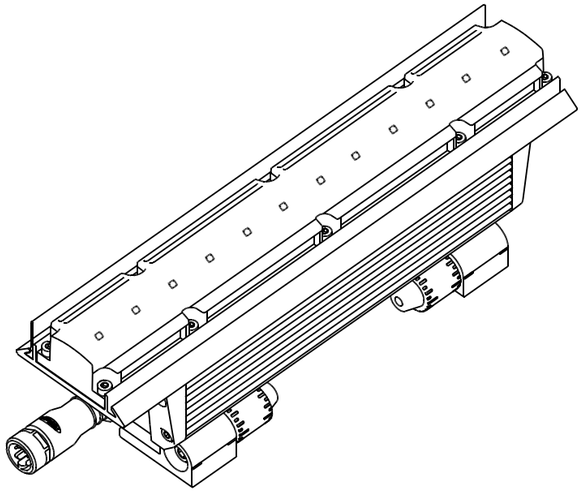

A	12.03.2018	User	First release
Rev.	Date	Resp.	CO no. / Comment

Martin HARMAN	First used in		Material		
Item to be			General linear tolerance		
Item to be			General angular tolerance		
Item to be		Color		Format A3	Scale -	Unit mm
	Description: Exterior Linear 300/320 Graze mounted with glare shield			Item no.-Rev.	

?2018 Martin Professional ApS | Confidential

Martin?General Technical Specification apply to this item