RDM-3SWM Triple Switch Module - 20 A

Overview

The RDM-3SWM Triple Switch Module (**FG606-52**) is a 20 A triple general purpose relay module built for compact and economical switching of incandescent lamps, switched low-voltage transformers, switched fans and electrical outlets. It is designed for use with the RDA series of enclosures, in an AMX Lighting™ modular digital dimming system.

The RDM-3SWM uses positive air gap type relays.

This module's 120, 240, and 277 VAC ratings are CE, UL, and C-UL approved.

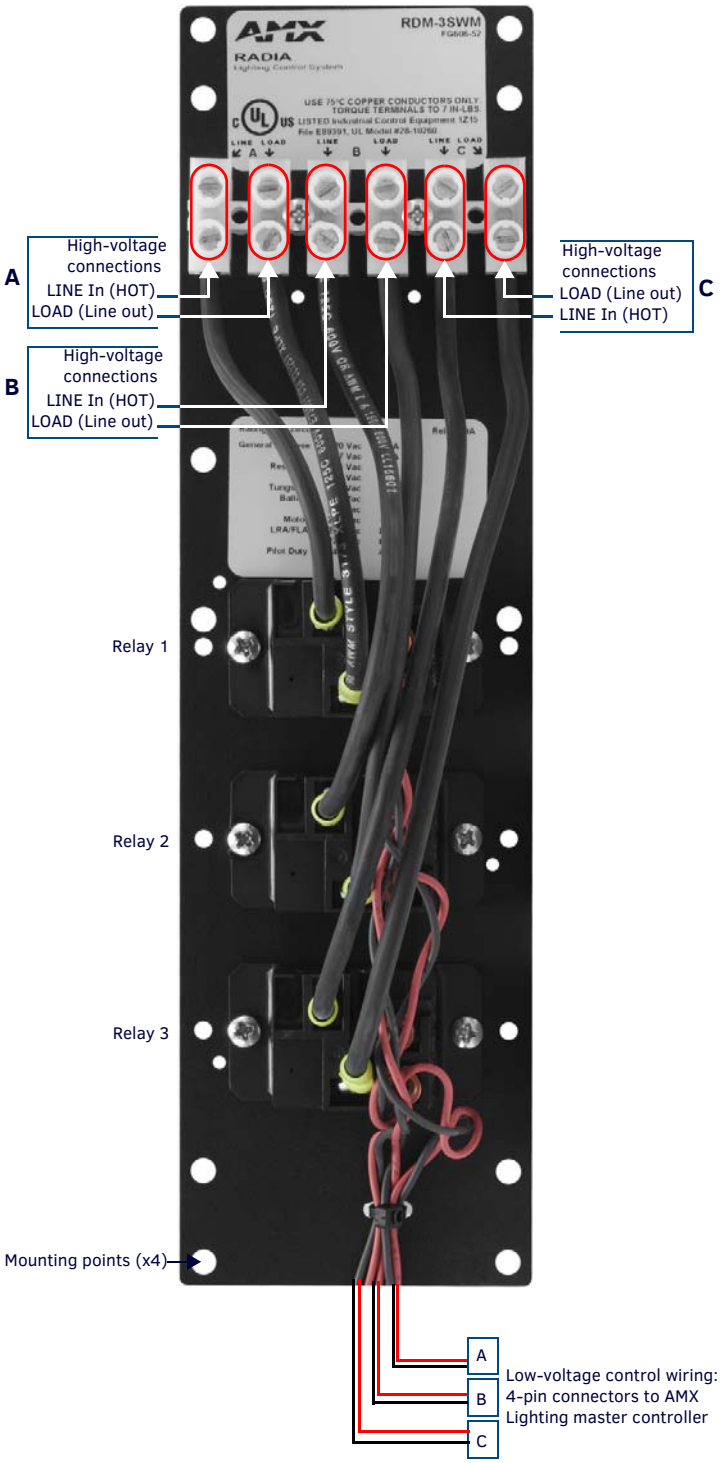

FIG. 1 RDM-3SWM

RDM-3SWM UL and C-UL Ratings

- General purpose: 2400 W
- Resistive: 2400 W
- Ballast: 2400 W
- Motor: 277 VAC, 1 hp

Suggested Switched Loads

- Incandescent
- Low-voltage
- Motors
- Switched outlets
- Fluorescent

Specifications

- Dimensions (HW): 10.00" x 2.75" (25.40 cm x 6.99 cm)
- Non-phase dependant
- Use wires rated at 75°C (167°F)
- Torque terminals to 7 in-lbs. (0.8 N/M)
- Max. wire size: 10 AWG (4 mm²)
- Wire stripping length: 0.28" (7 mm)
- Weight: 0.5 lbs. (0.227 kg)
- BTU/hr: 5 (15 total)
- Control current: 85 mA (255 mA total) @ 12 VDC

Caution: Pre-Installation Notes

- All Class 1 wiring must be connected to proper terminals.
- All control wiring must be connected to proper terminals.
- Disconnect power while installing or connecting the unit.
- Keep top and bottom air vents clear at all times.
- Test loads for shorts before connecting.
- Use low-voltage wires with a 300 volt rating or greater.
- Use field installed copper conductors.
- All electrical ratings are for continuous duty.
- For indoor use only.
- This module may require extra power from the AxLink connection or an external power supply connected to the control card.

Connecting the RDM-3SWM to the AMX Lighting Master

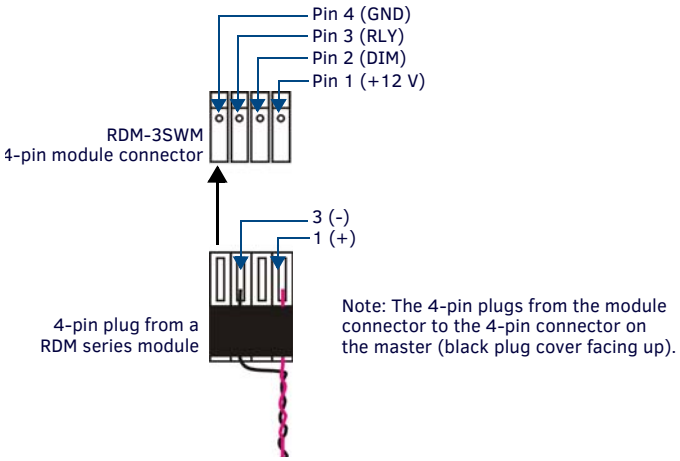

FIG. 2 RDM-3SWM CONNECTIONS

Wiring Diagram

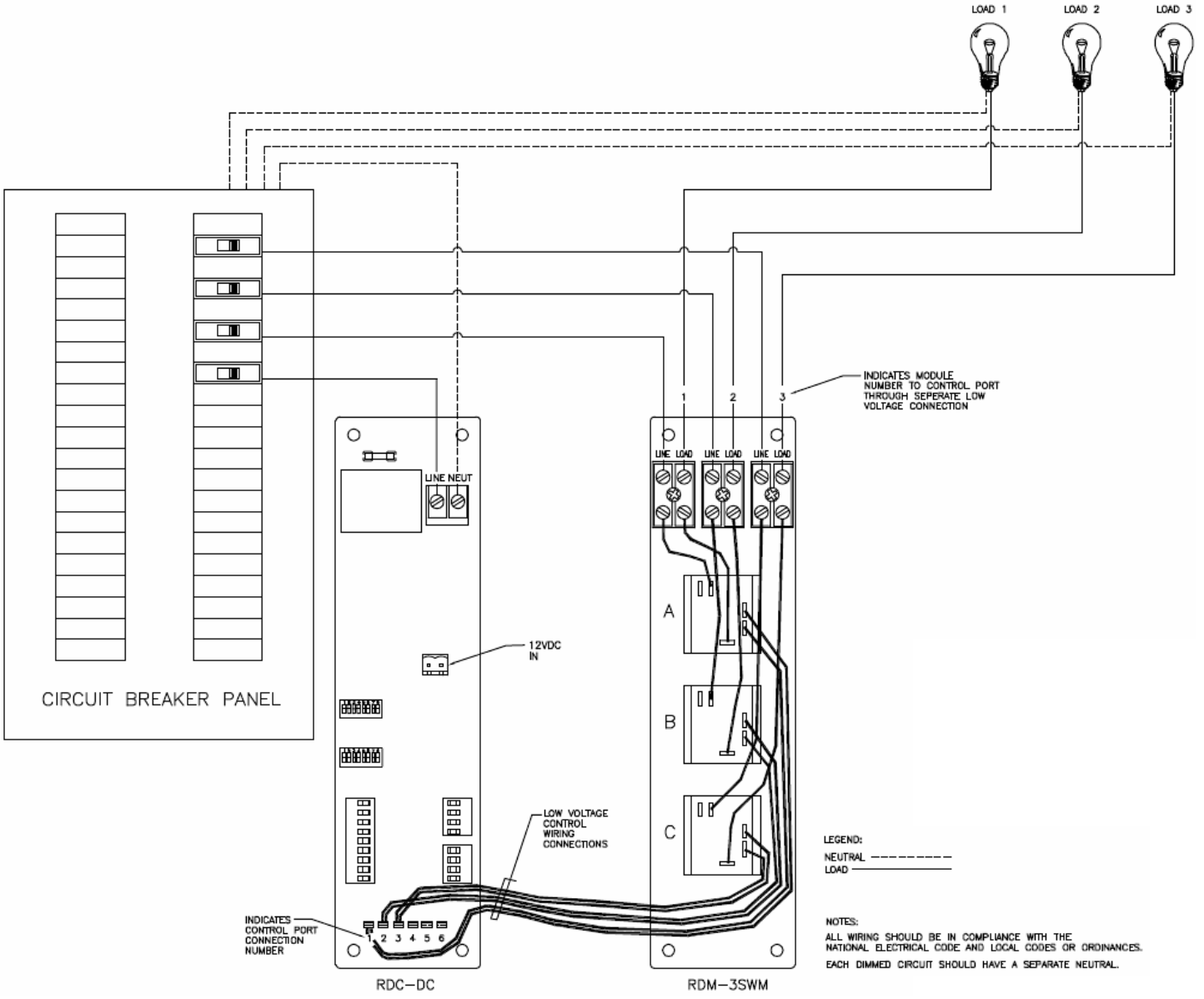

FIG. 3 RDM-3SWM LIGHTING MODULE WIRING

© 2015 Harman. All rights reserved. Radia, AMX, AV FOR AN IT WORLD, and HARMAN, and their respective logos are registered trademarks of HARMAN. Oracle, Java and any other company or brand name referenced may be trademarks/registered trademarks of their respective companies. AMX does not assume responsibility for errors or omissions. AMX also reserves the right to alter specifications without prior notice at any time. The AMX Warranty and Return Policy and related documents can be viewed/downloaded at www.amx.com.

3000 RESEARCH DRIVE, RICHARDSON, TX 75082 AMX.com | 800.222.0193 | 469.624.8000 | +1.469.624.7400 | fax 469.624.7153
AMX (UK) LTD, AMX by HARMAN - Unit C, Auster Road, Clifton Moor, York, YO30 4GD United Kingdom • +44 1904-343-100 • www.amx.com/eu/

93-0606-52 REV: A
Last Revised: 11/09/2015