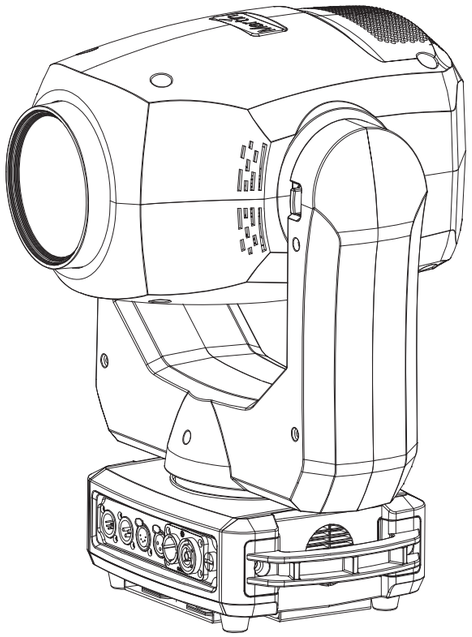

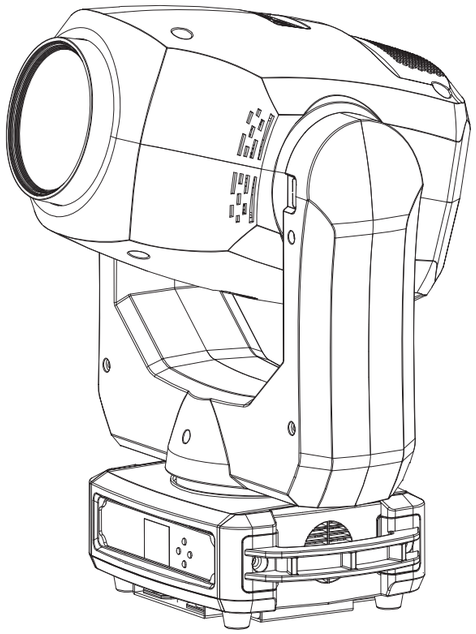

A	15.01.2019	MB	First release
Rev.	Date	Resp.	CO no. / Comment

Martin by HARMAN	First used in		Material	
Item to be			General linear tolerance	
Item to be			General angular tolerance	
Item to be	Color	Format A3	Scale -	Unit mm
	Description Martin ERA 300 Profile		Item no.-Rev.	

© 2018 Martin Professional ApS Confidential

Martin™ General Technical Specification apply to this item