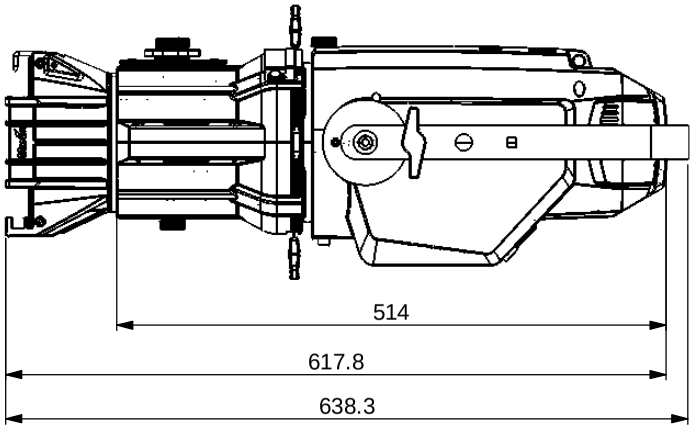

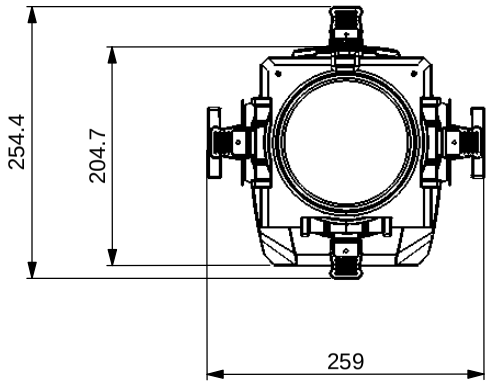

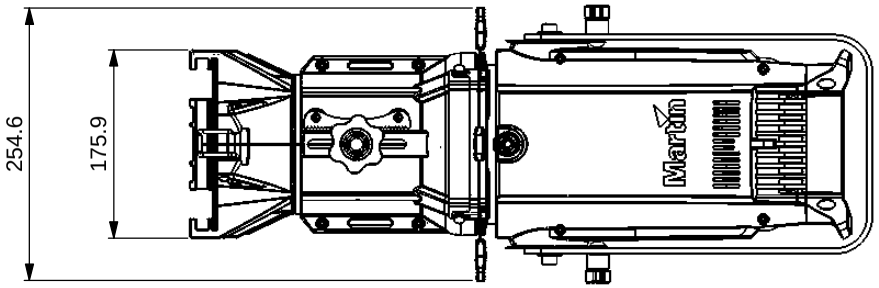

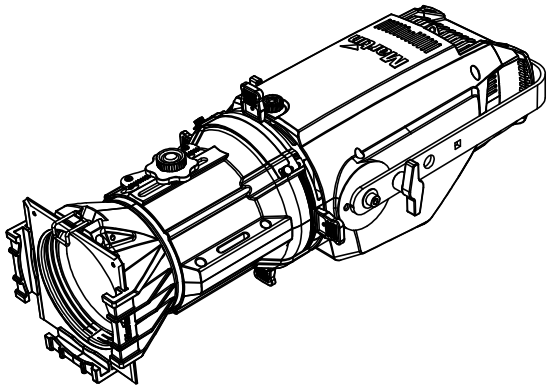

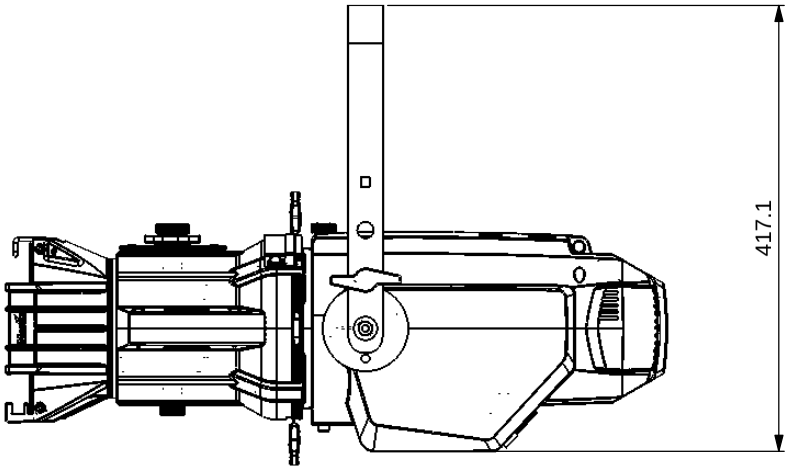

Rev.	Date	Resp.	CO no. / Comment
A	22.01.2019	Jimmy.L	First release

Martin HARMAN	First used in		Material	
Item to be			General linear tolerance	
Item to be			General angular tolerance	
Item to be		Color	Format A3	Scale 1:5 / Unit mm
Description (Model in view elp250fc) Martin ELP CL/WW			Item no.-Rev.	

2018 Martin Professional Aps | Confidential

Martin™ General Technical Specification apply to this item