ELP CL LED Profile

User Manual

Martin by HARMAN

Dimensions

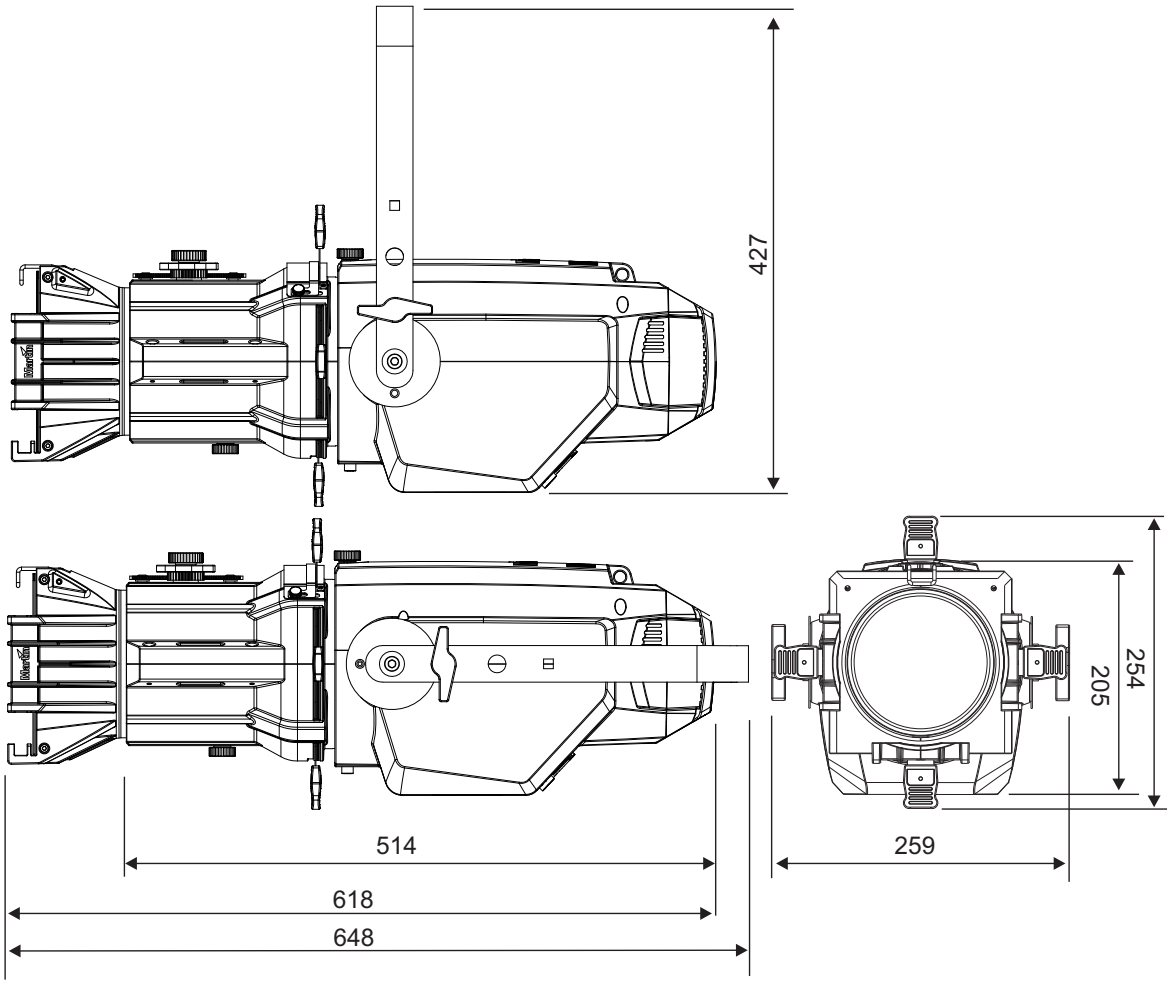

All dimensions are given in millimeters.

© 2018-2020 HARMAN® Professional Denmark ApS. Information subject to change without notice. HARMAN Professional Denmark and all affiliated companies disclaim liability for any injury, damage, direct or indirect loss, consequential or economic loss or any other loss occasioned by the use of, inability to use or reliance on the information contained in this manual. Martin®, HARMAN and all other trademarks in this document pertaining to services or products by Martin Professional or its affiliates and subsidiaries are registered as the property of HARMAN Professional Denmark.

HARMAN PROFESSIONAL DENMARK ApS, Olof Palmes Alle 44, 8200 Aarhus N, Denmark
HARMAN PROFESSIONAL SOLUTIONS U.S., 8500 Balboa Blvd., Northridge CA 91329, USA

www.martin.com

Table of contents

Dimensions 2
Safety information 5
Introduction 9
    Before using the product for the first time 9
Fixture overview 10
Physical installation 11
    Fixture location 11
    Mounting the fixture 11
    Fastening the fixture to a flat surface 11
    Mounting the fixture on a truss 12
    Securing with a safety cable 12
    Changing the lens tube 13
AC power 14
    Linking fixtures to power in a chain 14
Control data 15
    Tips for reliable data transmission 15
    Connecting the DMX data link 15
Fixture Setup 16
    Using the control menus 16
    Control panel display 16
    Fast focus mode 16
    Setting the DMX address 16
    Setting DMX personality 17
    Other fixture settings 17
    Display 19
    Set all settings to factory default 19
    Fixture test 19
    Fixture information 19
    Viewing live DMX values 19
    Setting control values manually 19
    Reset 19
    Setting values 19
    Setting a sequence of scenes 20
    Color calibration 20
Setting options by RDM 21
    Scanning for RDM devices on the data link 21
    Getting status and setting options by RDM 21
    RDM 21
Effects 23
    Dimming 23
    Strobe effects 23
    CTC 23
    Color mix 23
    Color Scene 23
    Manual focus 23

Manual beam shaping shutters 23
Use of filters 24
Use of gobos and irises 24
Service and maintenance 25
Cleaning 25
Fuse replacement 25
Uploading new firmware 25
Service and repairs 26
DMX protocol 27
Control menus 29
Troubleshooting 33
Specifications 34

Safety information

WARNING!

Read the safety precautions in this manual before installing, operating or servicing this product.

The following symbols are used to identify important safety information on the product and in this manual:

Warning!	**Warning!**	**Warning!**	**Warning!**	**Warning!**	**Warning!**
Safety hazard. Risk of severe injury or death.	***Powerful light emission. Risk of eye injury.***	***See user manual for important safety information.***	***Hazardous voltage. Risk of lethal or severe electric shock.***	***Fire hazard.***	***Hot surfaces.***

Warning! Risk Group 3 product (see "Protection from eye injury" on page 6 for full details). This product produces intense light output that may be hazardous if suitable precautions are not taken. Do not view the light output with optical instruments or any device that may concentrate the beam. Possibly hazardous optical radiation emitted from this product. Do not look at operating light source. Eye injury may result.

This lighting fixture is for professional use only and must be installed by a qualified technician. It is not for household use. It presents risks of severe injury or death due to fire hazards, electric shock and falls. It can create a fire hazard or a risk of eye injury if the safety precautions below are not followed.

Respect all locally applicable laws, codes and regulations when installing, applying power to, operating or servicing the fixture.

The light source contained in this luminaire shall only be replaced by the manufacturer or his service agent or a similar qualified person.

Install, operate and service Martin products only as directed in their user manuals, or you may create a safety hazard or cause damage that is not covered by product warranties. Follow the safety precautions listed below and observe all warnings in this manual and printed on the product. Keep this user manual for future use.

For the latest user documentation and other information about this and all Martin products, please visit the Martin website at http://www.martin.com

Technical Support

If you have questions about how to install, service or operate the fixture safely, please contact Harman Professional Technical support:

- For technical support in North America, please contact HProTechSupportUSA@harman.com / phone: (844) 776-4899
- For technical support outside North America, please contact your national distributor.

Protection from electric shock

Ensure that the fixture is electrically connected to ground (earth).

Disconnect the fixture from AC power when not in use.

Do not open the fixture or remove any cover. Refer any service operation not described in this manual to an authorized Martin Service partner.

Shut down power to the entire installation at the main power distribution board and lock out power before carrying out any installation or maintenance work.

Use only a source of AC power that complies with local building and electrical codes and has both overload and ground-fault (earth-fault) protection.

The 0.75 mm^2 / 18 AWG mains power input cable supplied with the fixture is rated 6 A and can supply only one fixture with mains power. Do not connect any device to the fixture's MAINS OUT socket when using this input cable.

Before you can connect other devices to the fixture's MAINS OUT socket, you must use one of the 16 A rated power input cables available as optional accessories from Martin to connect the fixture to power at the MAINS IN socket.

Use one of the 16 A rated power relay cables available as optional accessories from Martin to relay power from the fixture's MAINS OUT socket to the MAINS IN socket of the next fixture. If you link fixtures to power in a chain in this way, do not exceed the following limits:

- Connect a maximum of four (4) ELP PROFILE fixtures in total to power in a chain at 100-120 V, or
- Connect a maximum of nine (9) ELP PROFILE fixtures in total to power in a chain at 200-240 V.

Before using the fixture, check that all power distribution equipment and cables are in perfect condition, are rated for the current requirements of all connected devices, and are of suitable type for the location (including water, pollution, temperature and UV resistance).

The voltage and AC frequency of the power at the MAINS OUT socket are the same as those applied at the MAINS IN socket.

Isolate the fixture from power immediately if any seal, cover, cable, or other component is damaged, defective, deformed or showing signs of overheating. Do not reapply power until repairs have been completed

Do not immerse the fixture in water or any other fluid. Do not install the fixture in a location where flooding may occur.

Protection from burns and fire

Do not operate the fixture if the ambient temperature (Ta) exceeds 40° C (104° F).

The surface of the fixture can reach up to 55° C (131° F) if the fixture is operated at the maximum permitted ambient temperature. Allow the fixture to cool for at least 5 minutes before handling.

Install the fixture on a non-combustible surface (brick, concrete, plaster etc.) only.

Do not aim the fixture towards combustible materials (fabric, wood, paper etc.) that are within 50 cm (19 in.) of the fixture.

Keep the fixture well away from flammable materials (volatile liquids etc.).

Do not expose the front glass to sunlight or any other strong light source from any angle. Lenses can focus the sun's rays inside the fixture, creating a potential fire hazard.

Ensure that there is free and unobstructed airflow around the fixture.

Allow at least 0.2 m (8 in.) free space around the fixture.

Do not attempt to bypass thermostatic switches or fuses.

Do not modify the fixture in any way not described in this manual or install other than genuine Martin parts. Do not stick filters, masks or other materials onto any lens or other optical component. Use only accessories approved by Martin to modify the light beam.

Protection from eye injury

Do not look directly into the product's light output.

Do not look at operating light source. Eye injury may result.

Do not look at the light output with magnifiers, telescopes, binoculars or similar optical instruments that may concentrate the light output.

Ensure that persons are not looking directly into the front of the fixture when the product lights up suddenly. This can happen when power is applied, when the product receives a DMX signal, or when certain control menu items are selected.

To minimize the risk of eye irritation or injury, disconnect the fixture from power at all times when the fixture is not in use and provide well-lit conditions to reduce the pupil diameter of anyone working on or near the fixture.

This fixture corresponds to Risk Group 3 according to EN 62471 when all photobiological risks are considered and Risk Group 2 product according to IEC/TR 62778 for blue light only. It emits possibly hazardous optical radiation. It falls into the Risk Group categories shown below according to both EN 62471 and IEC/TR 62778 under worst-case conditions.

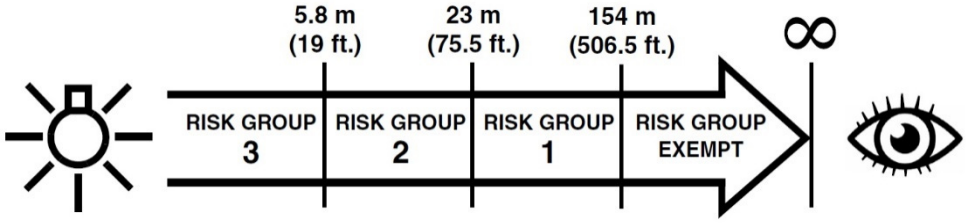

At a distance of less than 5.8 m (19 ft.) from the fixture, the light output can potentially cause eye or skin injury before an exposed person's natural aversion responses (blink reflex and reaction to skin discomfort) can protect them. At distances greater than 5.8 m (19 ft.), potential eye and skin injury hazards from the light output are normally prevented by natural aversion reflexes.

Position the fixture so that persons cannot be exposed to the fixture's light output at a distance of less than 5.8 m (19 ft.) from the fixture, and so that prolonged staring into the light output at less than 23 m (75.5 ft.) from the fixture is not expected.

Protection from injury

Fasten the fixture securely to a fixed surface or structure when in use. The fixture is not portable when installed.

Ensure that all supporting structures, surfaces, fasteners and lifting equipment can bear the weight of all the devices they are intended to support plus an adequate safety margin, and that they conform to local building and safety regulations.

If the fixture is installed in a location where it may cause injury or damage if it falls, install as described in this manual a secondary attachment such as a safety cable that is approved by an official body such as TÜV as a safety attachment for the weight that it secures. The safety cable must comply with EN 60598-2-17 Section 17.6.6 or BGV C1 / DGUV 17, and must be capable of bearing a static suspended

load at least six times (or more if required by locally applicable regulations) the weight that it secures.

Eliminate as much slack as possible in the safety cable (by looping it more than once around the rigging truss, for example). Make sure that, if the primary attachment fails, the fixture cannot fall more than 20 cm (8 inches) maximum before the safety cable catches it.

If the safety cable attachment point becomes deformed, do not suspend the fixture. Have the fixture repaired by an authorized Martin service partner.

Ensure that any accessories such as gel frames, gobo holders are securely fastened.

Block access below the work area and work from a stable platform whenever installing, setting, adjusting, or cleaning the fixture.

Do not operate the fixture with missing or damaged covers, shields or any optical component.

If an operating problem occurs, stop using the fixture immediately and disconnect it from power. Do not attempt to use a fixture that is obviously damaged.

Introduction

The ELP CL from Martin® is an ellipsoidal/profile lighting fixture with a 260 W red, green, blue, amber & lime LED engine that produces a sharp gobo projection with a flat field.

Four fixed beam angle lens tubes and two zoom lens tubes are available for the fixture. We recommend that you order the lens tube of your choice at the same time as ordering the fixture body.

The fixture provides a calibrated color mixing system that offers 2 modes of operation:

- High-quality mode with a CRI of 90 and CCT of 5500 K at 5900 lumens output
- High-performance mode with a CRI of 85 and CCT of 6000 K at 6900 lumens output.

The fixture has 16-bit dimming with 4 selectable curves. It includes innovative features including a gear-based fine focus system which is still compatible with industry standard accessories. The fixture is ideal for theatre, gobo projection, art lighting, architectural lighting and key lighting applications.

The Martin ELP CL can be controlled using any DMX-compliant controller and can be remotely configured by RDM. It also features stand-alone operation with capacity for up to 20 scenes.

The fixture is supplied with this user manual, a 1.5 m (4.9 ft.) power cable ready for a local power plug (not included) and a yoke for attachment of suitable user-supplied rigging clamps.

Before using the product for the first time

1. Read ‘Safety information’ on page 5 before installing, operating or servicing the fixture.
2. Unpack and ensure that there is no transportation damage before using the fixture. Do not attempt to operate a damaged fixture.
3. Before operating, ensure that the voltage and frequency of the power supply match the power requirements of the fixture.
4. If the fixture is not going to be hard-wired to a mains supply, install a local power plug (not supplied) on the end of the supplied power cable.
5. If fixtures are exposed to a sudden temperature change, give them time to warm or cool to the ambient temperature before applying power. This will help avoid damage due to condensation.
6. Check the support pages on the Martin website at www.martin.com for the most recent user documentation and technical information about the fixture. Martin user manual revisions are identified by the revision letter at the bottom of the inside cover.

Fixture overview

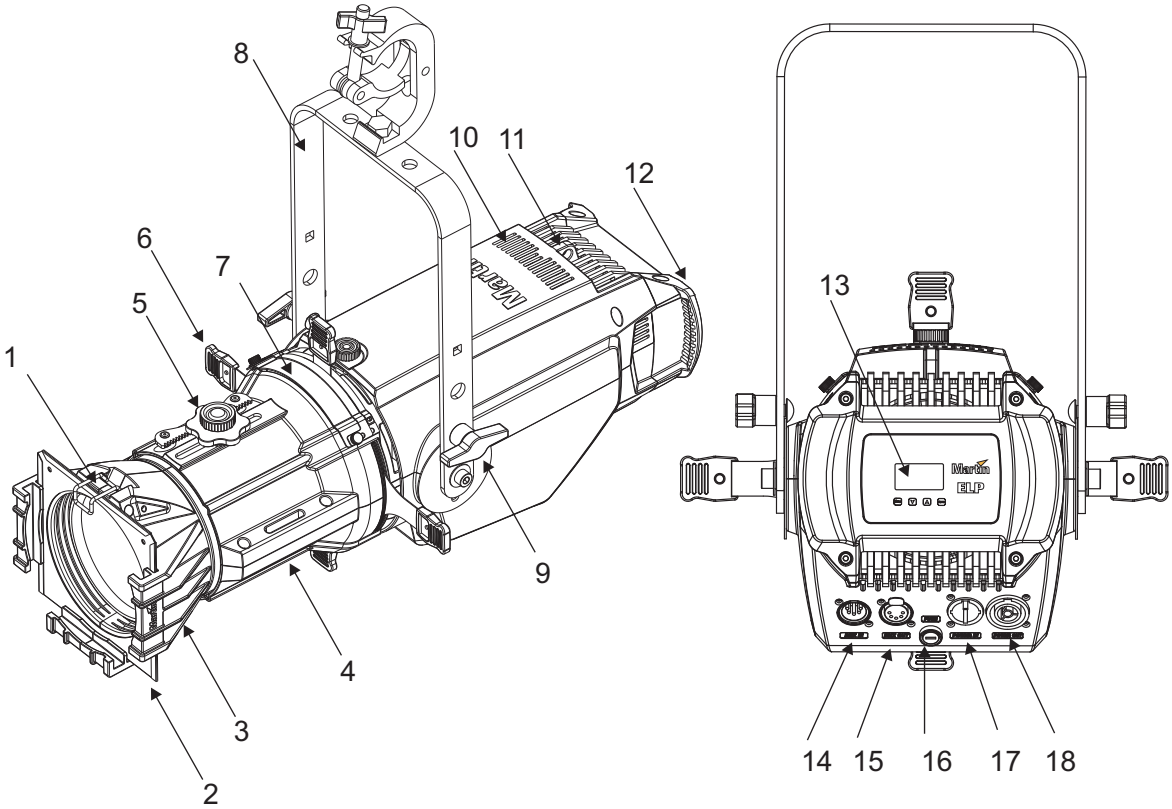

1 – Filter retaining clip

2 – Filter frame

3 – Interchangeable optical lens tube

4 – Lens tube housing

5 – Upper lens tube locking thumbscrew
Fine focus adjustment wheel

6 – Beam shaping shutter handles

7 – Gobo / accessory gate with sliding cover

8 – Mounting bracket / yoke

9 – Tilt locking knob

10 – Heatsink vent

11 – Safety cable attachment point

12 – Rear handles for positioning

13 – Control panel.

14 – DMX input (5-pin XLR)

15 – DMX output (5-pin XLR)

16 – Mains fuse

17 – Mains power input (Neutrik powerCON TRUE1).

18 – Mains power output (Neutrik powerCON TRUE1)

Physical installation

Warning! Read ‘Safety information’ on page 5 before installing the fixture.

Warning! The safety and suitability of lifting equipment, installation location, anchoring method, mounting hardware and electrical installation are the responsibility of the installer. All local safety regulations and legal requirements must be observed when installing and connecting the fixture. Installation must be carried out by qualified professionals only.

Contact your Martin supplier for assistance if you have any questions about how to install this product safely.

Fixture location

The ELP Profile fixture is intended for interior use only. Do not install outside or in wet or humid locations. The fixture requires free and unobstructed airflow around it to ensure adequate cooling.

Observe the following limitations in selecting a location:

- Respect the precautions listed under Safety information’ on page 5.
- Do not locate the fixture in an unventilated space.

Warning! See drawing on right. Lenses can focus sunlight and strong light, presenting a risk of fire and damage to the fixture, creating a potential fire hazard and causing damage. Position or shade the head so that the front lens will not be exposed to sunlight or another strong light source from any angle – even for a few seconds.

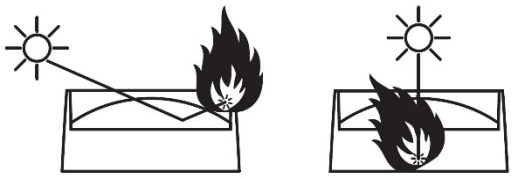

Important! Do not point the output from other lighting fixtures at the fixture, as powerful light can damage the display.

Mounting the fixture

Warning! All fasteners used to mount ELP Profile fixtures must be strong enough to hold the fixture safely. Install a washer directly under the head of each fastener when anchoring the mounting bracket to the installation surface.

Fastening the fixture to a flat surface

The fixture can be fastened to a hard, fixed, flat surface in any orientation. Ensure that the surface and all fasteners used can support at least 10 times the weight of all fixtures and equipment they will support.

Fasten the fixture securely. Do not stand it on a surface where it may fall over. If you install the fixture in a location where it may cause injury or damage if it falls, secure it as directed below with a securely anchored, approved safety cable that will hold the fixture if the primary fastening method fails.

Mounting the fixture on a truss

The fixture can be clamped to a truss or similar rigging structure in any orientation. Use a suitable rigging clamp such as a G-clamp or a half-coupler clamp (see illustration on right) fastened to the mounting yoke.

To clamp the fixture to a truss:

1. Check that the rigging structure can support at least 10 times the weight of all fixtures and equipment to be installed on it.
2. Block access under the work area.
3. Bolt a rigging clamp securely to the mounting yoke. The bolts used must be M12, grade 8.8 steel minimum, and fastened with a self-locking nut.
4. Working from a stable platform, mount the fixture on the truss and fasten the rigging clamp onto the truss.
5. Secure the fixture with a safety cable attached to the rear safety eye as directed below.

Securing with a safety cable

Secure the fixture with a safety cable (or other suitable secondary attachment) that is approved for the weight of the fixture so that the safety cable will hold the fixture if the primary attachment fails. Fasten the safety cable to the attachment eye at the rear of the fixture (see illustration below) and loop it around a secure anchoring point. Take up as much slack in the cable as possible to minimize any drop if the primary attachment fails.

If a safety cable attachment point becomes damaged or deformed, do not use the fixture. Return it to a Martin Service Centre for repair.

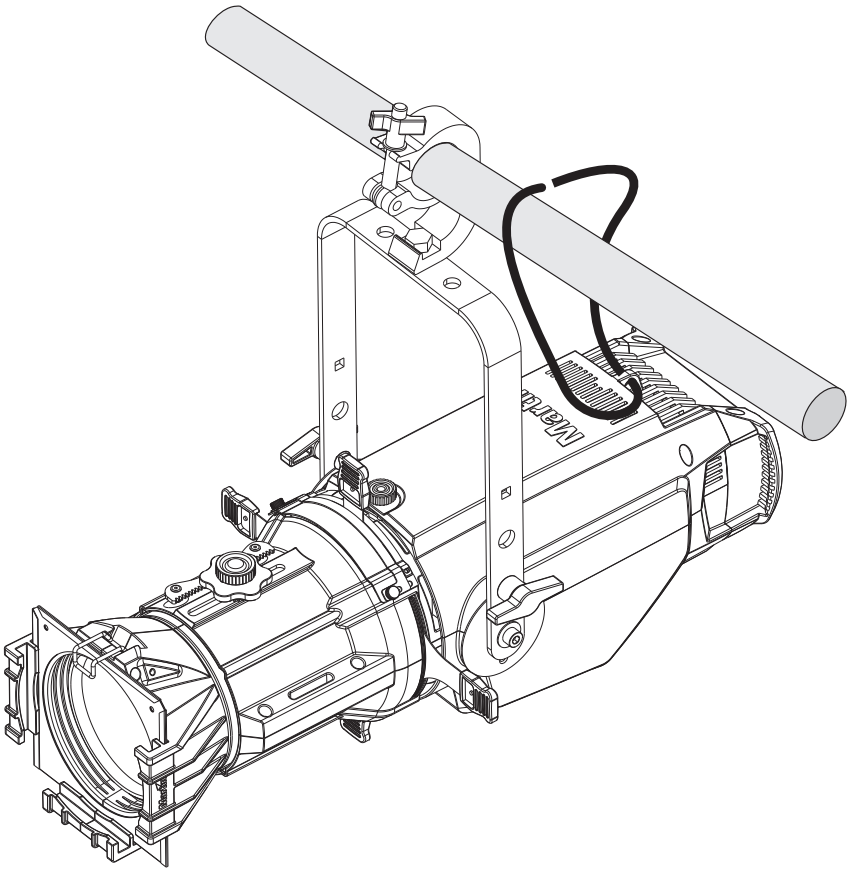

Changing the lens tube

Four different lens tubes with fixed beam angles of 19°, 26°, 36° or 50° are available for the fixture. Two zoom lens tubes with either 15°-30° or 25°-50° zoom ranges are also available. All lens tubes are available in black or white finish. See 'Ordering Information' on page 36 for ordering details.

To change the lens tube, refer to the diagram below:

1. Hold the front of the lens assembly with one hand so that it cannot fall out.
2. Remove the thumbscrews (2) and (3) from the top and bottom of the lens tube. The top screw also has the focusing wheel attached.
3. Slide the lens tube forward out of the fixture.
4. Slide in the new lens tube (1).
5. Begin to thread the thumbscrews (2) and (3) into their holes. For the top screw (2), ensure that the focusing wheel sits on the screw with the gear teeth facing downwards, towards the fixture. Rotate the focusing wheel until the gear teeth mesh with the toothed rack on the lens tube housing.
6. Tighten the thumbscrews (2) and (3).

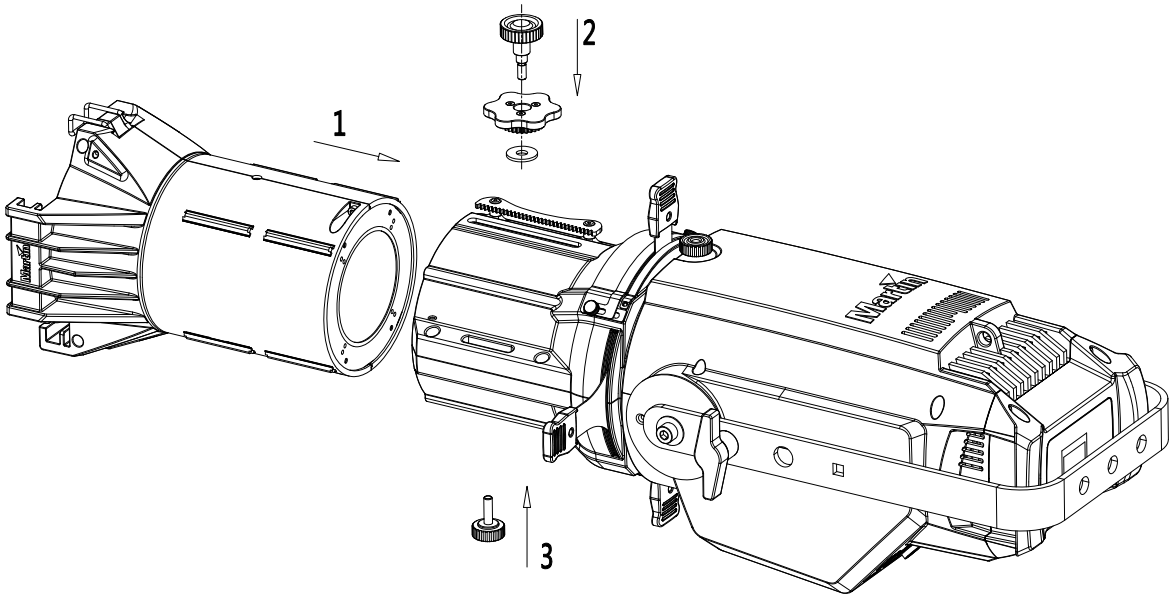

AC power

Warning! Read ‘Safety information’ on page 5 before installing the fixture.

Warning! The 18 AWG / 0.75 mm^2 mains power input cable supplied with the fixture is rated 6 A and can supply only one fixture with mains power. Do not connect any device to the fixture’s MAINS OUT socket when using this input cable. If you want to connect other fixtures to the MAINS OUT socket, see ‘Linking fixtures to power in a chain’ below.

For protection from electric shock, the fixture must be grounded (earthed). The power distribution circuit must be equipped with a fuse or circuit breaker and ground-fault (earth-fault) protection.

Important! Do not use an external dimming system to supply power to the fixture, as this may cause damage to the fixture that is not covered by the product warranty.

The fixture has an auto-ranging power supply that accepts AC mains power at 100-240 V at 50/60 Hz. Do not apply AC mains power at any other voltage or frequency to the fixture.

The fixture can be hard-wired to a building electrical installation if you want to install it permanently, or a power plug (not supplied) that is suitable for the local power outlets can be installed on the power cable. Socket outlets or external power switches used to supply the fixture with power must be located near the fixture and easily accessible so that the fixture can easily be disconnected from power.

If you install a power plug on the supplied power cable, install a grounding type (earthed) plug with integral cable grip that is suitable for your local mains voltage and is rated minimum 6 A. Follow the plug manufacturer’s instructions and connect the wires in the power cable as shown in this table:

	Live or L	**Neutral or N**	**Earth, Ground or ⏚**
US system	Black	White	Green
EU system	Brown	Blue	Yellow/green

Linking fixtures to power in a chain

The mains power input cable supplied with the fixture is rated 6 A and can safely supply power to one fixture only.

If you want to use the MAINS OUT socket on the fixture to link power to another fixture in a daisy-chain, you must first replace the supplied power input cable with one of the 16 amp rated 12 AWG / 2.5 mm^2 power input cables available as optional accessories from Martin (see ‘Accessories’ on page 36). If you install a power plug on a 12 AWG / 2.5 mm^2 power input cable, install a grounding type (earthed) plug with integral cable grip that is rated minimum 16 A, 250 V.

To link fixtures to power in a daisy-chain, use the 16 amp rated 12 AWG / 2.5 mm^2 power relay cables available from Martin (see ‘Accessories’ on page 36) to link fixtures’ MAINS OUT sockets to MAINS IN sockets. Using the 16 amp rated cables available as accessories from Martin, you can link:

- Maximum four (4) ELP PROFILE fixtures in total at 100-120 V, or
- Maximum nine (9) ELP PROFILE fixtures in total at 200-240 V.

Do not exceed these limits.

If you create custom power relay cables, use only the Neutrik PowerCON TRUE1 connectors listed under ‘Accessories’ on page 36.

Control data

A DMX 512 data link is required in order to control the fixture via DMX. The fixture has 5-pin XLR connectors for DMX data input and output.

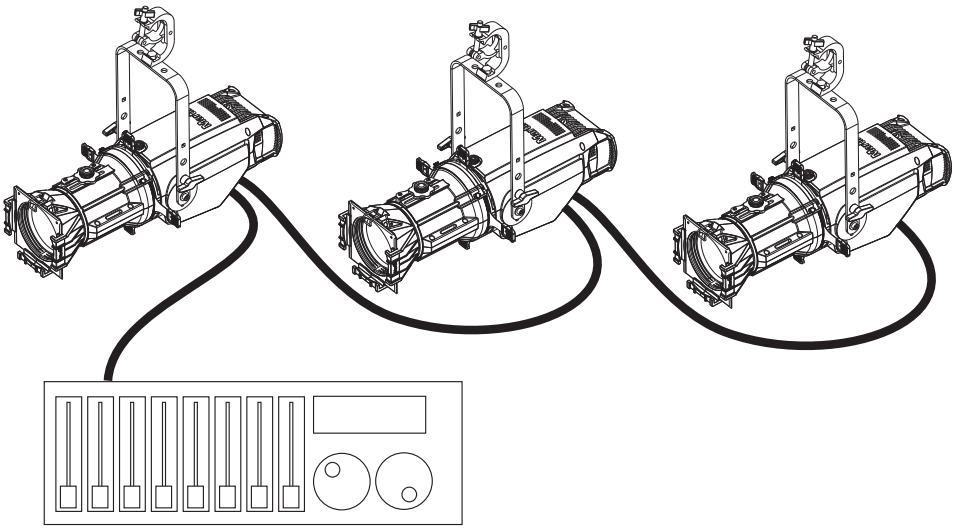

Up to 32 devices can be linked together on a single daisy chain. The total number of fixtures in one 512-channel DMX universe is limited by the number of DMX channels required by the fixtures. Note that if independent control of a fixture is required, it must have its own DMX channels. Fixtures that are required to behave identically can share the same DMX address and channels. To add more fixtures or groups of fixtures when the above limits are reached, add another DMX universe or split the daisy-chained link into branches using a powered DMX splitter.

Tips for reliable data transmission

Use shielded twisted-pair cable designed for RS-485 devices: standard microphone cable cannot transmit control data reliably over long runs. 24 AWG cable is suitable for runs up to 300 meters (1000 ft.). Heavier gauge cable and/or a DMX buffer is recommended for longer runs. The pin-out on all connectors is:

- pin 1 = shield
- pin 2 = cold (-)
- pin 3 = hot (+).

Pins 4 and 5 in the XLR connectors are not used in the fixture but are passed through for possible additional data signals as required by the DMX512-A standard. Standard pin-out is pin 4 = data 2 cold (-) and pin 5 = data 2 hot (+).

To split the link into branches, use an opto-isolated splitter such as the Martin RDM 5.5 Splitter. Terminate the link by installing a termination plug in the output socket of the last fixture. The termination plug, which is a male XLR plug with a 120 Ohm, 0.25 W resistor soldered between pins 2 and 3, “soaks up” the control signal so it does not reflect and cause interference. If a splitter is used, terminate each branch of the link.

Connecting the DMX data link

To connect the fixture to data:

- Connect the DMX data output from the controller to the closest fixture’s male XLR DMX input connector.
- Connect the first fixture’s DMX output to the DMX input of the next fixture and continue connecting fixtures output to input. Terminate the last fixture on the link with a DMX termination plug.

Fixture setup

This section explains the fixture characteristics you can set that determine how it can be controlled and will behave. You choose the settings using the menus available from the control panel, and they are retained even when the fixture is powered off.

Options can also be set over the DMX link using RDM from a suitable controller, see “Setting options by RDM” on page 21.

Only the main functions are described in this section. You can see a complete map of the control menu structure and brief explanations of their purposes in “Control menus” on page 29.

Using the control menus

See photo on right. Use the fixture’s control panel as follows:

- To access the control menus, press the MENU button.
- Navigate the menu structure using the ENTER, DOWN ⮟ and UP ⮝ buttons.
- To select a menu option or to confirm a selection, press the ENTER button.
- To return to a higher level in the menu structure without making a change, press the MENU button.
- To exit the control menus completely, press and hold the MENU button.

Control panel display

See photo on right. When you power the fixture on it resets and then shows the following data in the control panel display:

- Name of product
- Temperature of LED module
- DMX address currently used
- DMX Channels currently occupied

The display flashes when the fixture is not receiving a valid DMX signal.

Fast focus mode

If you need to focus the fixture but there is nobody to operate the lighting console, you can quickly turn the fixture on in “Fast Focus mode” using the control panel. Hold down the ENTER button for 5 seconds and the fixture will come on at full brightness in open white for 60 seconds, allowing you to set the focus. After 60 seconds the fixture will return to normal operation.

Setting the DMX address

Each fixture must be assigned a DMX address. The DMX address, also known as the start channel, is the first channel used to receive instructions from a DMX controller. The fixture is controlled using between 1 and 17 DMX channels depending on the personality set. If a fixture using 17 channels has a DMX address of 1, then it uses channels 1 to 17 inclusive. The following fixture in the DMX chain can then be set to a DMX address of 18.

For independent control, each fixture must be assigned its own control channels. Two fixtures of the same type may share the same address if identical behavior is desired. Address sharing can be useful for diagnostic purposes and symmetric control.

To set the fixture's DMX address:

1. Enter the control menu and select DMX SETUP. Press ENTER.
2. Select DMX ADDRESS and press ENTER.
3. Use the UP and DOWN buttons to select the desired address setting.
4. Press ENTER to confirm your selection (or to return to the top-level menu without changing the settings, press the MENU button).

Setting DMX personality

DMX personality sets how many control channels are used. There are 3 personalities to choose from:

- 1 channel – dimmer only
- 10 channel – 8-bit dimmer with 8-bit control of functions (default)
- 17 channel – 16-bit dimmer with 16-bit control of functions

The commands available on each channel are described in the section "DMX protocol" on page 27.

To set the DMX personality:

1. Enter the control menu and select DMX SETUP. Press ENTER.
2. Select DMX MODE and press ENTER.
3. Use the UP and DOWN buttons to select 1, 10 or 17.
4. Press ENTER to confirm your selection (or to return to the top-level menu without changing the settings, press the MENU button).

Other fixture settings

The PERSONALITY menu allows you to set other options for the fixture.

Stand-alone mode

The fixture can operate in stand-alone mode allowing control of multiple fixtures from a single master fixture if no DMX console is connected. The options are OFF (default), MASTER and CLIENT. Stand-alone operation will be automatically overridden by incoming DMX signal.

Light quality

The ELP offers two options in the QUALITY menu that let you prioritize either color rendering or power in the fixture's light output. The settings available are:

- HIGH QUALITY mode: CRI = 90, color temperature = 6000 K, max. output = 5600 lumens, or
- HIGH OUTPUT mode: CRI = 85, color temperature = 5500 K, max. output = 6900 lumens.

The QUALITY menu also includes a TUNGSTEN setting in which the fixture color temperature emulates the warm output from a fixture with a tungsten lamp: the color temperature is set to 3000 K and becomes warmer at lower intensity levels.

Besides the TUNGSTEN setting, you can also enter a custom color temperature from 2000 K to 10 000 K.

in 1-Channel DMX Mode, the TUNGSTEN and custom color temperature settings determine the color temperature of the fixture's white light output.

In 10-Channel and 17-Channel Modes these settings also determine the base color temperature of the fixture's white light output. In these modes you can use color mixing on top of this color temperature.

Dimming curves

Four dimming modes are available:

LINEAR	The increase in light intensity appears to be linear as DMX value is increased.
SQUARE LAW	light intensity control is finer at low levels and coarser at high levels.
INV SQ LAW	(Inverse square law) light intensity control is coarser at low levels and finer at high levels.
S-CURVE	light intensity control is finer at low levels and high levels and coarser at medium levels.

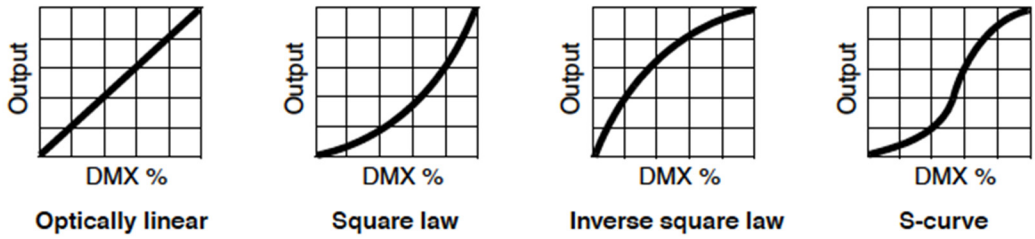

To set the fixture's dimmer curve, select DIMMER CURVE from the PERSONALITY menu and press ENTER to confirm. Use the UP and DOWN buttons to select the desired mode. Press ENTER to save your selection.

PWM Frequency

Sets the frequency of the PWM dimming used on the fixture. It can sometimes be necessary to change this if flickering is seen on TV cameras running at a high shutter speed.

The PWM frequency settings available range from 600 Hz to 2400 Hz. The default frequency is 1200 Hz.

No Data Mode

This option sets what will happen when DMX data is not present.

To set No Data Mode, select NO DATA MODE from the PERSONALITY menu and press ENTER to confirm. Use the UP and DOWN buttons to select:

- BLACKOUT – If data connection is lost, fixture blacks out.
- HOLD – If data connection is lost, fixture obeys the last DMX commands received on all channels (default).

Press ENTER to confirm.

Cooling Mode

This option sets whether cooling fan speed is regulated depending on fixture temperature or whether the cooling fans run at a constant speed.

To set cooling mode, select COOLING MODE from the PERSONALITY menu and press ENTER to confirm. Use the UP and DOWN buttons to select:

- REGULATED FANS – Fan speed is controlled by fixture temperature. Fans only run at the speed necessary to keep the fixture within its normal operating temperature range. Light output is not reduced unless full fan speed is not enough to keep the fixture within its safe operating temperature range.
- FULL – Fans are set to constant full speed. Light output is not reduced unless full fan speed is not enough to keep the fixture within its safe operating temperature range.
- LOW – Fans are set to constant low speed. The maximum light output available is reduced by approx. 15% and fan noise is significantly reduced.

Press ENTER to confirm.

Display

This option allows you to set some parameters for the display screen.

Select DISPLAY from the PERSONALITY menu and press ENTER to confirm.

Use the UP and DOWN buttons to select:

- DISPLAY SLEEP – Use the UP and DOWN buttons to select display sleep time, settings are ON (Display permanently on), 2 MINUTES, 5 MINUTES or 10 MINUTES
- DISPLAY ROTATION –Use the UP and DOWN buttons to select Normal (Display orientation normal) or ROTATE 180 (Display orientation rotated 180°)
- DISPLAY INTENSITY –Use the UP and DOWN buttons to adjust display intensity from 10%-100% (default = 100%)
- TEMPERATURE UNIT – Use the UP and DOWN buttons to select °C or °F

Press ENTER to confirm.

Set all settings to factory default

To return all settings to factory default, select DEFAULT SETTINGS and press ENTER to confirm, FACTORY DEFAULT will show on the display. Press ENTER again.

Use the UP and DOWN buttons to select NO (cancel) or YES (return all settings except calibrations to factory defaults).

Press ENTER to confirm (or press MENU to exit without making a change).

Fixture test

This menu allows you to run self-test sequences on the fixture's LED emitters. Each color of emitters will be switched on in turn.

Fixture information

The INFORMATION menu allows you to view various fixture information: Power on time, LED hours, Software version, Fixture ID, RDM unique ID, Fan speeds, temperatures.

Viewing live DMX values

This menu allows you to view the current DMX values for any function.

Select the DMX LIVE menu and press ENTER.
Use the UP and DOWN buttons to select the function you wish to view.

Setting control values manually

You can manually set control values. This may be useful when testing, or to use the fixture in a static setting without a DMX controller.

This menu also allows you to reset the fixture.

Reset

To reset the fixture, go to the MANUAL CONTROL menu and press ENTER. Use the UP and DOWN buttons to select RESET and press ENTER again.

Then use UP and DOWN to select YES, and press ENTER to activate.

Setting values

Go to the MANUAL CONTROL menu and press ENTER. Use the UP and DOWN buttons to select the function you wish to control.

Once you have selected a function, press ENTER, then use the UP and DOWN buttons to select a value from 0 to 255.

Press MENU to go back up and select a different function to control.

Setting a sequence of scenes

The SHOW menu allows the fixture to store up to 20 scenes internally and display them in a timed sequence.

SET SCENE TOTALS sets how many scenes will be in the sequence, from 1 to 20.

To store scenes, select EDIT SCENE COLOR and press ENTER. Then use the UP and DOWN buttons to select the scene number to be edited. Press ENTER. Use the UP and DOWN buttons to select the color to be set (RED, GREEN, BLUE, LIME, AMBER), then press ENTER and finally use the UP and DOWN buttons to set the brightness of the color.

The FADE TIME option sets the fade time between scenes, from 0-120 seconds (default 3 seconds).

The HOLD TIME option sets the time each scene is shown for, from 0-600 seconds (default 3 seconds).

Color calibration

From the SERVICE menu you can select CALIBRATION. This menu allows you to adjust the overall brightness and individual colors of the fixture to match with other fixtures. The fixture is calibrated in the factory but over time the brightness of the LED emitters will gradually decrease, so this function can be useful if you need to match a new fixture with older ones.

- DIMMER sets the overall maximum brightness of the fixture.
- RED, GREEN, BLUE, LIME, AMBER can be made dimmer or brighter from -128 to 127.
- LOAD DEFAULTS will load the factory-set calibration values. If you have replaced the factory-set values with custom values using DEF HQ SET or DEF HO SET (see below) it will load the custom values.

Because two light quality modes – high-quality and high-output mode – are available in the PERSONALITY → QUALITY menu, from software v.1.2 you can adjust the calibration settings of each mode separately:

- DEF HQ SET replaces the factory-set calibration values for high-quality mode with the current custom calibration values that you have set using the commands listed above.
- DEF HO SET replaces the factory-set calibration values for high-output mode with the current custom calibration values that you have set using the commands listed above.

You must enter a password (019 by default) before you can access these two menu items.

Important! The DEF HQ SET and DEF HO SET commands permanently overwrite the factory-set calibration values. It is not possible to restore the factory-set values by powering the fixture off and on, resetting the fixture or uploading new firmware. Once you have saved custom calibration values using DEF HQ SET and DEF HO SET commands, the only way to return to the original factory-set values is to re-adjust the calibration settings for the dimmer and the individual colors back to their original values..

Setting options by RDM

You can remotely configure the fixture over the DMX line using a suitable RDM-compatible controller that is connected to the installation via a DMX data link.

A full list of the RDM functions that the ELP fixture supports is given at the end of this chapter. These functions are generally referred to using the more specific term ‘PIDs’ or ‘Parameter IDs’.

Scanning for RDM devices on the data link

Before you can communicate with fixtures using RDM, you must send a scan command (also called a device discovery command) to all the devices on the data link so that the RDM controller can identify them. It does this by retrieving each device’s factory-set unique identifier (UID). This process can take some time depending on the number of devices on the link.

Getting status and setting options by RDM

The status and options listed in the table below can be read and set by RDM.

You can set an option on one fixture by sending a unicast RDM command to that one fixture only, or you can set the same option on all the fixtures on the data link by sending a broadcast RDM command to all the devices on the link.

For status reading, you can only use unicast RDM to read information from an individual fixture.

RDM

As a minimum, the ELP CL supports the following RDM functions:

Device discovery

DISC_UNIQUE_BRANCH
DISC_MUTE
DISC_UN_MUTE

Device management

	GET	SET
QUEUED_MESSAGE	✓	
STATUS_MESSAGES	✓	
STATUS_ID_DESCRIPTION	✓	
SUPPORTED_PARAMETERS	✓	
DEVICE_INFO	✓	
DEVICE_MODEL_DESCRIPTION	✓	
MANUFACTURER_LABEL	✓	
DEVICE_LABEL	✓	✓
SOFTWARE_VERSION_LABEL	✓	
BOOT_SOFTWARE_VERSION_ID	✓	
BOOT_SOFTWARE_VERSION_LABEL	✓	
DMX_PERSONALITY	✓	✓

DMX_START_ADDRESS	✓	✓
DEVICE_HOURS	✓	✓
IDENTIFY_DEVICE	✓	✓
LAST_STATE		✓
DIMMER_CURVE		✓

Effects

This section describes the effects provided by the ELP CL. See ‘DMX protocol’ on page 27 for a full list of the DMX channels and values required to control the different effects.

In 17Ch DMX control mode, all intensity controls are 16-bit. In 10Ch mode all controls are 8-bit.

Dimming

Overall intensity can be precisely adjusted from 0 to 100% using 16-bit coarse and fine control. In 10Ch mode the control is 8-bit. In 1Ch mode this is the only control and the fixture is fixed in white.

Strobe effects

An electronic shutter provides instant open and blackout, random and variable speed flash from 1 to 12 flashes per second, and pulse effects.

CTC

The color temperature of the fixture can be set from 2000K to 10000K using 16-bit coarse and fine control. When the CTC function is active, the color control channels are not used.

Color mix

The fixture is equipped with Red, Green, Blue, Lime and Amber emitters which can be individually controlled using 16-bit coarse and fine control.

Color Scene

You can select from a range of fixed color temperatures and LEE color filters. If the Color Scene function is active the Color mix channels are not used.

Manual focus

The ELP CL has a unique “Fine Focus” system which allows you to easily make small focus adjustments using a gear-based wheel on top of the lens tube. To focus the fixture, see drawings below. Loosen the thumbscrews **A** and **B** on the top and bottom of the lens tube slightly, then turn the focus wheel **C** to slide the lens in or out of the tube. Tighten the thumbscrews **A** and **B** again to hold the focus setting.

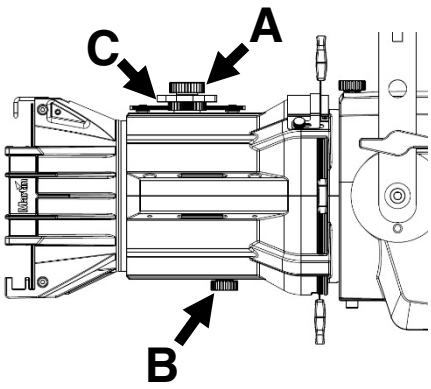

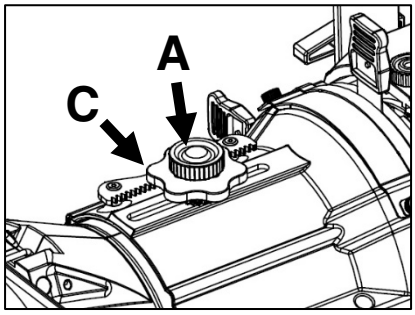

Manual beam shaping shutters

The fixture has 4 manually operated beam shaping shutters.

To change the shape of the beam, power the fixture on and aim the beam at the target. Use the four shutter blade handles (see **6** in ‘Fixture overview’ on page 10) to adjust the position of the shutter blades and obtain the desired beam shape.

Use of filters

The color filter frame that is supplied with the lens tube lets you add color correction or diffusion filters to the front of the fixture. Push the filter retaining clip (see **1** in 'Fixture overview' on page 10) to one side to insert and remove filters. Click the retaining clip back into place after inserting a filter and check that the clip is secure to prevent the color filter frame from falling out.

Use of gobos and irises

The fixture will accept an A-size or B-size goboholder or an iris (items not included) in the gobo/accessory gate. There is a sliding cover over the gate to prevent light spill and retain the goboholder in the fixture. To install a goboholder or iris:

1. Allow the fixture to cool. See drawing below. Loosen, but do not remove, the two thumbscrews (arrowed) at the sides of the cover.
2. Slide the cover towards the front of the fixture.
3. Slide the goboholder into the accessory gate in the fixture.
4. Slide the cover back so that it holds the goboholder in place and tighten the thumbscrews.

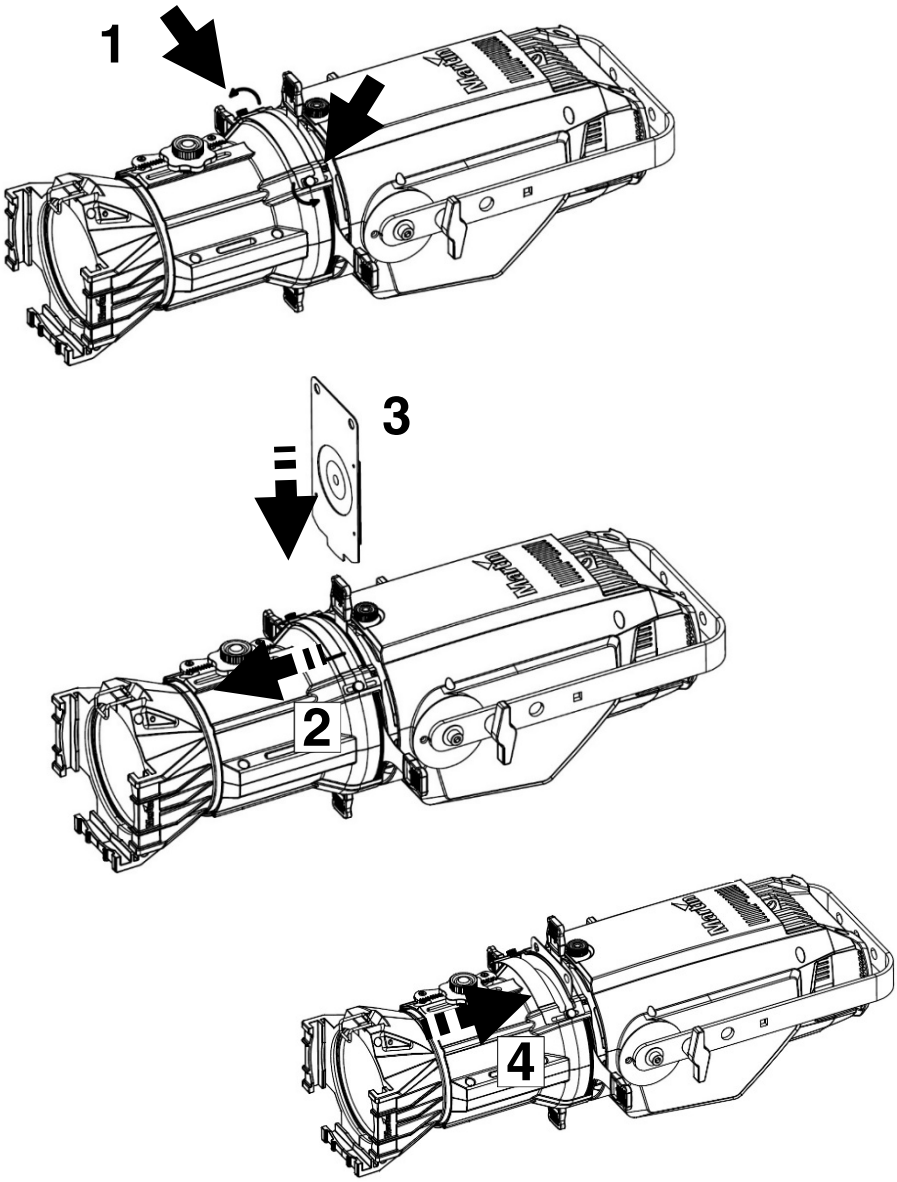

Service and maintenance

Warning! Read ‘Safety information’ on page 5 before servicing the fixture.

Refer any service operation not described in this user manual to a qualified service technician.

Excessive dust, smoke fluid, and particle buildup degrades performance, causes overheating and will damage the fixture. Damage caused by inadequate cleaning or maintenance is not covered by the product warranty.

Disconnect mains power before cleaning or servicing the fixture.

Service fixtures in an area where there is no risk of injury from failing parts, tools or other materials.

Cleaning

The cleaning of external optical lenses must be carried out periodically to optimize light output. Cleaning schedules for lighting fixtures vary greatly depending on the operating environment. It is therefore impossible to specify precise cleaning intervals for the fixture. Environmental factors that may result in a need for frequent cleaning include:

- Use of smoke or fog machines.
- High airflow rates (near air conditioning vents, for example).
- Presence of cigarette smoke.
- Airborne dust (from stage effects, building structures and fittings or the natural environment at outdoor events, for example).

If one or more of these factors is present, inspect fixtures within their first 100 hours of operation to see whether cleaning is necessary. Check again at frequent intervals. This procedure will allow you to assess cleaning requirements in your particular situation. If in doubt, consult your Martin dealer about a suitable maintenance schedule.

Use gentle pressure only when cleaning, and work in a clean, well-lit area. Do not use any product that contains solvents or abrasives, as these can cause surface damage.

To clean the fixture:

1. Disconnect the fixture from power and allow it to cool for at least 10 minutes.
2. Vacuum or gently blow away dust and loose particles from the outside of the fixture and the air vents at the back and sides of the head and in the base with low-pressure compressed air.
3. Clean the lens by wiping gently with a soft, clean lint-free cloth moistened with a weak detergent solution. Do not rub the surface hard: lift particles off with a soft repeated press. Dry with a soft, clean, lint-free cloth or low-pressure compressed air. Remove stuck particles with an unscented tissue or cotton swab moistened with glass cleaner or distilled water. You can remove the lens tube to clean the rear side of the lens if needed.
4. Check that the fixture is dry before reapplying power.

Fuse replacement

If you need to replace a fuse:

1. Disconnect the fixture from power and allow it to cool for at least 10 minutes.
2. Unscrew the cap of the fuseholder (see Fixture overview on page 10) and remove the fuse. Replace with a fuse of the same size and rating only.
3. Reinstall the fuseholder cap before reapplying power.

Uploading new firmware

Martin releases new firmware (fixture software) from time to time if it can improve functionality of Martin fixtures. All firmware versions are available from the Martin website. You can install firmware using a Windows PC running the Martin Companion software suite with a Martin

Companion Cable USB/DMX hardware interface connected to the DMX link or directly to the fixture's DMX IN connector.

You can check the currently installed firmware version in the INFORMATION menu in the fixture's control panel.

If you update firmware to a newer version, check the ELP area of www.martin.com to see whether an updated version of this User Manual is available for the new firmware.

Installing using a PC running Martin Companion

Important! Do not switch the fixture off or disconnect the source of the firmware during an upload, or the firmware will be corrupted.

The following are required in order to install firmware using a PC:

- A Windows PC running the latest version of the Martin Companion software suite (available for download from the Martin website at www.martin.com).
- The latest ELP CL firmware file. Martin Companion automatically downloads this file from the Martin fixture firmware cloud when Martin Companion is launched on a PC that is connected to the Internet.
- A Martin Companion Cable USB-DMX hardware interface, available from your Martin supplier by ordering P/N 91616091.

To install the ELP CL firmware using Martin Companion:

1. Apply power to the fixture(s) and allow to boot. Connect the Martin Companion Cable hardware interface to your PC and to the fixture's DMX IN connector or to the DMX link. All ELP fixtures that are powered on and connected to the DMX link will have their firmware updated.
2. Start the PC and launch the Martin Companion application.
3. Locate the latest ELP firmware in the Martin Companion application (*Firmware → ELP → ELP CL*).
4. Start the firmware upload by clicking *Update Firmware* in the Martin Companion application. Do not disconnect the Martin Companion cable or power off the fixture(s) until the upload is complete and the fixture(s) has successfully rebooted.
5. If you are updating multiple fixtures over a DMX link, check that they have all rebooted correctly.

Service and repairs

There are no user-serviceable parts inside the fixture. Do not open the housing.

Do not try to repair the fixture by yourself as this may result in damage, malfunction and it may potentially void your product warranty. The equipment must only be serviced or repaired by an authorized Martin service technician.

Installation, on-site service and maintenance can be provided worldwide by the Martin Professional Global Service organization and its approved agents, giving owners access to Martin's expertise and product knowledge in a partnership that will ensure the highest level of performance throughout the product's lifetime. Please contact your Martin supplier for details.

DMX protocol

Channel			DMX range	Function
1CH	*10CH*	*17CH*		
				Shutter
			000-009	Blackout
			010-019	Open
			020-089	Strobe (Slow-Fast)
	1	*1*	090-099	Open
			100-169	Pulse effect in sequences
			170-179	Open
			180-249	Random strobe effect (Slow-Fast)
			250-255	Open
1	*2*	*2*	0-255	Dimmer 0-100%
		3	0-255	Dimmer Fine
	3	*4*	0-255	Dimmer fade time
	4	*5*	0-255	CTC 2000K – 10000K
		6	0-255	CTC fine
	5	*7*	0-255	Red 0-100%
		8	0-255	Red fine
	6	*9*	0-255	Green 0-100%
		10	0-255	Green fine
	7	*11*	0-255	Blue 0-100%
		12	0-255	Blue fine
	8	*13*	0-255	Lime 0-100%
		14	0-255	Lime fine
	9	*15*	0-255	Amber 0-100%
		16	0-255	Amber fine
	10	*17*		Color Scene
			0-10	No function
			11-19	2000K-2700K
			20-28	2700K-3200K
			29-37	3200K-4200K
			38-46	4200K-5600K
			47-55	5600K-8000K
			56-65	8000K-10,000K
			66-74	Light Pink
			75-84	Pale Amber Gold
			85-93	Yellow

Channel			DMX range	Function
1CH	*10CH*	*17CH*		
			94-103	Deep straw
			104-112	Deep Amber
			113-122	Orange
			123-131	Primary Red
			132-141	Medium Pink
			142-150	Dark Pink
			151-160	Magenta
			161-169	Medium Purple
			170-179	Dark Lavender
			180-188	Deep Purple
			189-198	Sky Blue
			199-207	Light Blue
			208-217	Medium Blue
			218-226	Deep Blue
			227-236	Blue Green
			237-245	Moss Green
			246-255	Primary Green

Control menus

To access the control menus, press the MENU button. Use the UP and DOWN buttons to navigate the menus. Select any required menu option using the ENTER button. For more information, see ‘Only the main functions are described in this section. You can see a complete map of the control menu structure and brief explanations of their purposes in “Control menus” on page 29.

Using the control menus’ on page 16.

Default fixture settings are shown in **bold**.

Top Menu	Menu level 2	Menu level 3	Menu level 4	Notes
DMX Setup	DMX Addr	**1** - XXX		DMX address **(default address = 1)**. The DMX address range is limited so that the fixture will always have enough DMX channels within the 512 available.
	DMX Mode	1/**10**/17		DMX control mode
Personality	Stand-Alone	**Off**		
		Master		Fixture acts as master in master/client operation - DMX/RDM signal will override master/client operation
		Client		Fixture copies master in master/client operation - DMX/RDM signal will override master/client operation
	Quality	**Hi Quality**		Output optimized for high CRI and CCT of 6000K
		Hi Output		Full output mode
		Tungsten		Tungsten lamp emulation
		2000K		Custom Color Temperature adjustment
		2700K		
		3200K		
		4200K		
		5600K		
		8000K		
		10,000K		
	Dim Curve	Linear		Optically linear dimming curve
		Square		Square law dimming curve
		Inv Sq		Inverse square law dimming curve

Top Menu	Menu level 2	Menu level 3	Menu level 4	Notes
		S-curve		S-curve (fixture emulates incandescent lamp voltage linear RMS dimming curve)
Personality (continued)	PWM Freq	600-2400Hz		LED PWM frequency (Default = 1200 Hz)
	No Data	Blackout		If data connection is lost, fixture will blackout
		Hold		If data connection is lost, fixture holds latest received data value at all channels
	Cool mode	**Reg fan**		Fan optimized for light intensity, temperature controlled by regulating fan speed, light output unaffected
		Full		Fans set to full/low constant speed, temperature controlled by regulating light output.
		Low		
	Display	Sleep	On	Display remains permanently on
			2 min	Display goes into sleep mode 2 minutes after last key press
			5 min	Display goes into sleep mode 5 minutes after last key press
			10 min	Display goes into sleep mode 10 minutes after last key press
		Rotation	**Normal**	Display orientation normal
			Rotate 180	Display orientation rotated 180°
		Intensity	10-**100**	Set display intensity in % (default = 100)
		Temp Unit	°**C**	All temperature readouts in C°
			°F	All temperature readouts in F°
Default Set	Fac Default	**No**		
		Yes		Return all settings to factory defaults
Fixture test	Test LEDs			Run test sequence of LEDs (Red, Green, Blue, Lime, Amber in each order), Dimmer and Strobe effect. Press Enter to restart test sequence. Press Menu button to exit test.

Information	Power On	0 - XXXX h		Hours fixture has been powered on since manufacture (not user-resettable)
	LED Hours	0 - XXXX h		Number of hours fixture LEDs have been powered on since manufacture (not user-resettable)
	SW Version	XX.XX.XX		Displays currently active software version
	Fixture ID	0 - 9999		User-settable fixture ID number
	RDM UID	XXXXXXXXXXXX		Displays fixture's unique RDM ID
	Temperature	LED / CPU Temp		Displays temperature in °C of all PCBs and LED
DMX Live	Dimmer, Shutter etc. …..	0 - 255 …		Scroll to see values being received on each DMX channel
Show	Set Scene	1-20		Number of standalone scenes
	Scene Color	1 - last scene	Red	0-255
			Green	0-255
			Blue	0-255
			Lime	0-255
			Amber	0-255
	Fade Time	0-120 secs **(3 secs)**		Transition time between scenes
	Hold Time	0- 600 secs **(3 secs)**		Length of time scenes are displayed
Manual control	Reset	**No**		
		Yes		Reset fixture
	Dimmer, Dimmer Fine, Dimmer Fade, CTC, Red, Green, Blue, Lime, Amber, Color Scene	0-255		Manual control of all 10 channels (Shutter should be set to open)
Service	Calibration	Dimmer	0-**100** %	Intensity master, defining maximum intensity
		Red, Green, Blue, Lime, Amber	-128 -> 127	Fine tune offset position of emitters to achieve uniform behavior across multiple fixtures
		Load Def	Load	Load factory default calibration settings

Service (continued)	Calibration (continued)	Password	XXX	Enter password (019) before replacing default calibration settings
		Def HQ Set	Save	Replace factory default calibration settings with current high-quality calibration settings
		Def HO Set	Save	Replace factory default calibration settings with current high-output calibration settings

Troubleshooting

This section describes a few common problems that may occur during operation and provides some suggestions for easy troubleshooting:

Symptom	Potential cause	Remedies
No light from fixture.	Shutters are all pushed in, blocking the light.	Pull out the 4 shutter blades.
	Power supply issue, such as blown fuse, faulty connector or damaged cable.	Ensure that the mains supply is connected and supplying power to the fixture.
		Ensure that the fixture's display screen lights up when a button is pressed.
		Check all power connections and cables.
		Replace the fixture fuse.
Fixture does not respond to DMX control.	Fault in the DMX network due to wiring problem, connector or cable damaged, or…	Check if the fixture display is flashing to show that DMX is not being received, and if so, check all DMX cables and connections to ensure the integrity of the physical network.
		Ensure that the DMX network is terminated.
		Check that the components in the DMX network all use standard DMX polarity.
	incorrect DMX addressing, or…	Ensure that the fixture is set to the correct DMX address, one that matches that set on the DMX control device.
		Check the pins on the connectors from the previous fixture in the DMX network.
		Attempt to control the fixture with another DMX control device.
	…potential interference from proximity to a high-voltage installation.	Move the fixture if it is being operated very close to an unshielded high-voltage installation.

Specifications

Physical

Length ..... 648 mm (25.5 in.)
Width ..... 259 mm (10.2 in.)
Height ..... 254 mm (10.0 in.)
Height (with bracket ..... 427 mm (16.8 in.)
Weight ..... 7.7 kg (17 lb.)

Dynamic Effects

Color mixing ..... RGBLA
Color selection ..... 26 color presets
Electronic dimming ..... 0 - 100%
Strobe and pulse effects ..... Variable speed and action, random strobe
Electronic 'shutter' effect ..... Instant open and blackout
Electronic dimming ..... Four dimming curve options

Control and Programming

DMX channels 1/10/17
16-bit control ..... Intensity, CTC, RGBLA
Control options ..... DMX, stand-alone
PWM ..... 600-1200 Hz
DMX address setting ..... Control panel with OLED display or via RDM
Stand-alone programming ..... Control panel with OLED display
DMX compliance ..... USITT DMX512-A
RDM compliance ..... ANSI/ESTA E1.20
Transceiver ..... Opto-isolated RS-485

Optics

Light source ..... 91 x RGBAL Luxeon Rebel LEDs
..... (19 x Red, 24 x Green, 12 x Blue, 24 x Lime, 12 x Amber)
Color Temperature ..... 2000-10 000 K
Lens Tube Options ..... 19°, 26°, 36° and 50°
Minimum LED lifetime ..... 30 000 hours (to >70% luminous output)*

**Figure obtained under manufacturer's test conditions*

Photometric Data (High-Quality Mode @ 6000 K)

Light engine luminous output ..... 20 000 lumens
Fixture luminous output ..... 5900 lumens
CRI (Color Rendering Index) ..... >90
CQS (Color Quality Scale) ..... >87
TM-30 Rf (IES TM-30-15 Fidelity Index) ..... >84
TM-30 Rg (IES TM-30-15 Gamut Index) ..... >106
TLCI (Television Lighting Consistency Index) ..... >87

Photometric Data (High-Output Mode @ 5500 K)

Light engine luminous output ..... 20 000 lumens
Fixture luminous output ..... 6900 lumens
CRI (Color Rendering Index) ..... >85
CQS (Color Quality Scale) ..... >90
TM-30 Rf (IES TM-30-15 Fidelity Index) ..... >84
TM-30 Rg (IES TM-30-15 Gamut Index) ..... >111
TLCI (Television Lighting Consistency Index) ..... >85

Construction

Color(s) ..... Black or white variant
Housing ..... Die-cast aluminum
Protection rating IP20

Gobos and Color Frame

Gobo size ..... A size, 100 mm OD, 75 mm image*
Gobo size ..... B size, 86 mm OD, 64.5 mm image*
Color frame size ..... 159 x 159 mm (6.25 in. x 6.25 in.)

** Goboholder not included*

Installation

Mounting ..... Adjustable bracket
Location ..... Indoor use only
Orientation ..... Any
Minimum distance to combustible materials ..... 0.2 m (0.7 ft.)
Minimum distance to illuminated surfaces ..... 0.5 m (1.6 ft.)

Connections

AC power in/thru ..... Neutrik PowerCON TRUE1
DMX & RDM data in/thru ..... 5-pin XLR

Electrical

AC power ..... 100-240 V nominal, 50/60 Hz
Power supply unit ..... Auto-ranging electronic switch-mode
Idle power (zero intensity) ..... 5 W
Half-cycle RMS inrush current at 230 V, 50 Hz ..... 18.0 A
Fixture link via PowerCON at 100-120 V ..... Up to 4 fixtures
Fixture link via PowerCON at 200-240 V ..... Up to 9 fixtures

Power consumption figures are typical, not maximum. Allow for +/-10% variation.:

Typical Power and Current

110 V, 60 Hz ..... 2.4 A, 259 W, PF 0.99
208 V, 60 Hz ..... 1.3 A, 250 W, PF 0.96
230 V, 50 Hz ..... 1.3 A, 249 W, PF 0.95
240 V, 50 Hz ..... 1.1 A, 249 W, PF 0.95

Measurements made at nominal voltage with all LEDs at full intensity. Allow for a deviation of +/- 10%.

Thermal

Cooling ..... Forced air (temperature-regulated, low noise)
Maximum ambient temperature (Ta max.) ..... 40° C (104° F)
Minimum ambient temperature (Ta min.) ..... 0° C (32° F)
Total heat dissipation (calculated, +/- 10%, at full intensity, full white) ..... 1000 BTU/hr.

Approvals

Global CB Certification/IECEE ..... IEC 60598-2-17 (IEC 60598-1)
EU safety ..... EN 60598-2-17 (EN 60598-1), EN 62471, EN 62493
EU EMC ..... EN 55015, EN 55032, EN 55103-2, EN 61000-3-2-3, EN 61547
US safety ..... UL 1573
US EMC ..... FCC Part 15 Class B
Canadian safety ..... CSA C22.2 No. 166
Canadian EMC ..... ICES-003 Class B, ICES-005 Class B
Australia/NZ ..... RCM

Included Items

Power input cable (0.75mm^2, 18 AWG), bare ends to Neutrik TRUE1 NAC3FX-W (female), 1.5 m (4.9 ft.)
Mounting bracket
User manual

Accessories

Cables, 16 A, for connection to power in chains

Power input cables

Power Input Cable, H07RN-F, 2.5 mm2, bare ends to
TRUE1 NAC3FX-W (female), 1.5 m (4.9 ft.) ..... P/N 91611797
Power Input Cable, H07RN-F, 2.5 mm2, bare ends to
TRUE1 NAC3FX-W (female), 5 m (16.4 ft.) ..... P/N 91611786
Power Input Cable, SJOOW, 12 AWG, bare ends to
TRUE1 NAC3FX-W (female), 1.5 m (4.9 ft.) ..... P/N 91610173
Power Input Cable, SJOOW, 12 AWG, bare ends to
TRUE1 NAC3FX-W (female), 5 m (16.4 ft.) ..... P/N 91610174

Power relay cables

Power Relay Cable, H07RN-F, 2.5 mm^2, TRUE1-TRUE1 0.45 m (1.5 ft.) ... P/N 91611784
Power Relay Cable, H07RN-F, 2.5 mm^2, TRUE1-TRUE1 1.2 m (3.9 ft.) ..... P/N 91611785
Power Relay Cable, H07RN-F, 2.5 mm^2, TRUE1-TRUE1 2.5 m (8.2 ft.) ..... P/N 91611796
Power Relay Cable, SJOOW, 12 AWG, TRUE1-TRUE1, 0.45 m (1.5 ft.) .... P/N 91610170
Power Relay Cable, SJOOW, 12 AWG, TRUE1-TRUE1, 1.2 m (3.9 ft.) ..... P/N 91610171
Power Relay Cable, SJOOW, 12 AWG, TRUE1-TRUE1, 2.5 m (8.2 ft.) ..... P/N 91610172

Power connectors

Neutrik PowerCON TRUE1 NAC3MX-W (male) ..... P/N 91611788HU
Neutrik PowerCON TRUE1 NAC3FX-W (female) ..... P/N 91611789HU

Related Items

Martin RDM 5.5 Splitter ..... P/N 90758150
Martin Companion Cable USB/DMX Interface ..... P/N 91616091
Martin Companion software suite ..... Free download from www.martin.com

Ordering Information

Fixtures without lens tubes

Martin ELP CL (fixture body only) ..... P/N 9045107780
Martin ELP CL (fixture body only), White ..... P/N 9045107780

Lens tube options*

Martin ELP Lens Tube 19° ..... P/N 9045107782
Martin ELP Lens Tube 26° ..... P/N 9045107783
Martin ELP Lens Tube 36° ..... P/N 9045107784
Martin ELP Lens Tube 50° ..... P/N 9045107785
Martin ELP Zoom Lens Tube 15-30° ..... P/N 9045121618
Martin ELP Zoom Lens Tube 25-50° ..... P/N 9045121619
Martin ELP Lens Tube 19°, White ..... P/N 9045115166
Martin ELP Lens Tube 26°, White ..... P/N 9045115167
Martin ELP Lens Tube 36°, White ..... P/N 9045115168
Martin ELP Lens Tube 50°, White ..... P/N 9045115170
Martin ELP Zoom Lens Tube 15-30°, White ..... P/N 9045122108
Martin ELP Zoom Lens Tube 25-50°, White ..... P/N 9045122109

**All lens tubes include a filter frame.*

Specifications are subject to change without notice. For the latest product specifications, see www.martin.com

Supplier's declaration of conformity

Harman Professional, Inc. have issued an FCC Supplier's Declaration of Conformity for this product. The Declaration of Conformity is available for download from the product's pages on the Martin website at www.martin.com

Disposing of the product

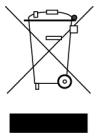

Martin products are supplied in compliance with Directive 2012/19/EC of the European Parliament and of the Council of the European Union on WEEE (Waste Electrical and Electronic Equipment), where applicable. Help preserve the environment! Ensure that this product is recycled at the end of its life. Your supplier can give details of local arrangements for the disposal of Martin products

Radio interference

This equipment has been tested and found to comply with the limits for a Class B digital device, pursuant to part 15 of the FCC Rules. These limits are designed to provide reasonable protection against harmful interference in a residential installation. This equipment generates, uses and can radiate radio frequency energy and, if not installed and used in accordance with the instructions, may cause harmful interference to radio communications. However, there is no guarantee that interference will not occur in a particular installation. If this equipment does cause harmful interference to radio or television reception, which can be determined by turning the equipment off and on, the user is encouraged to try to correct the interference by one or more of the following measures:

- Reorient or relocate the receiving antenna.
- Increase the separation between the equipment and receiver.
- Connect the equipment into an outlet on a circuit different from that to which the receiver is connected.
- Consult the dealer or an experienced radio/TV technician for help.