ELP WW IP LED Profile

User Manual

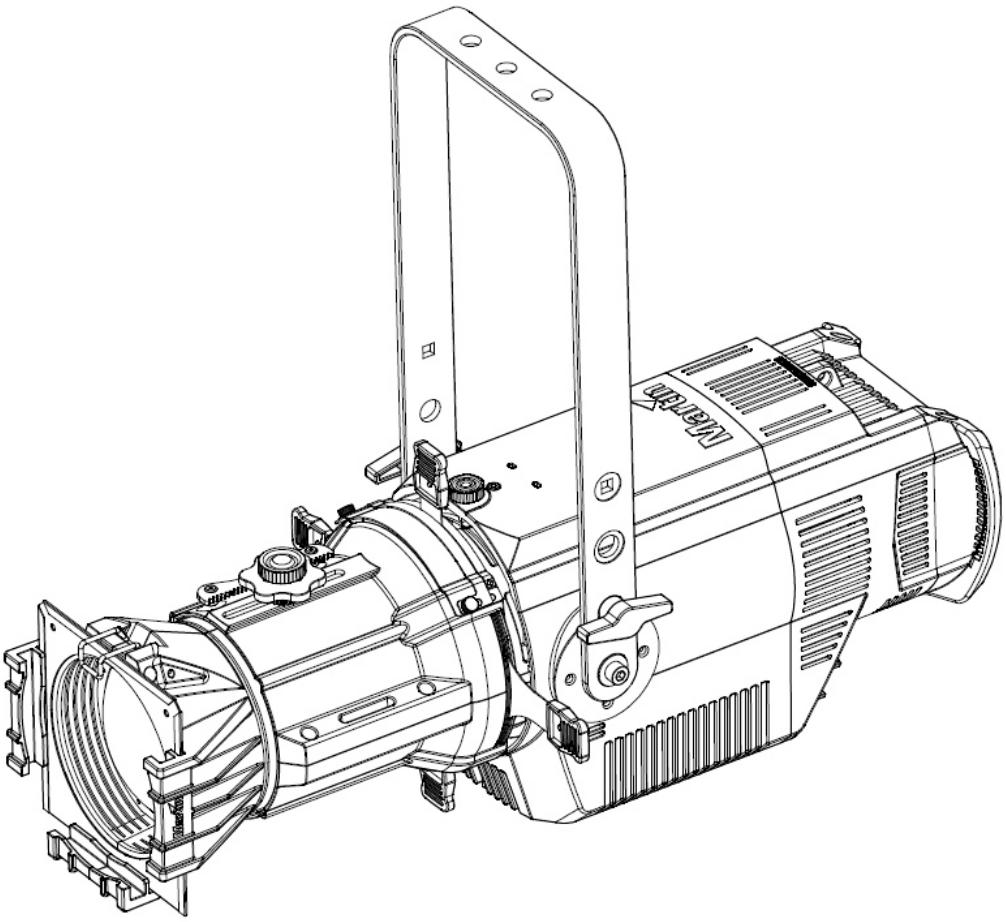

Martin by HARMAN

Dimensions

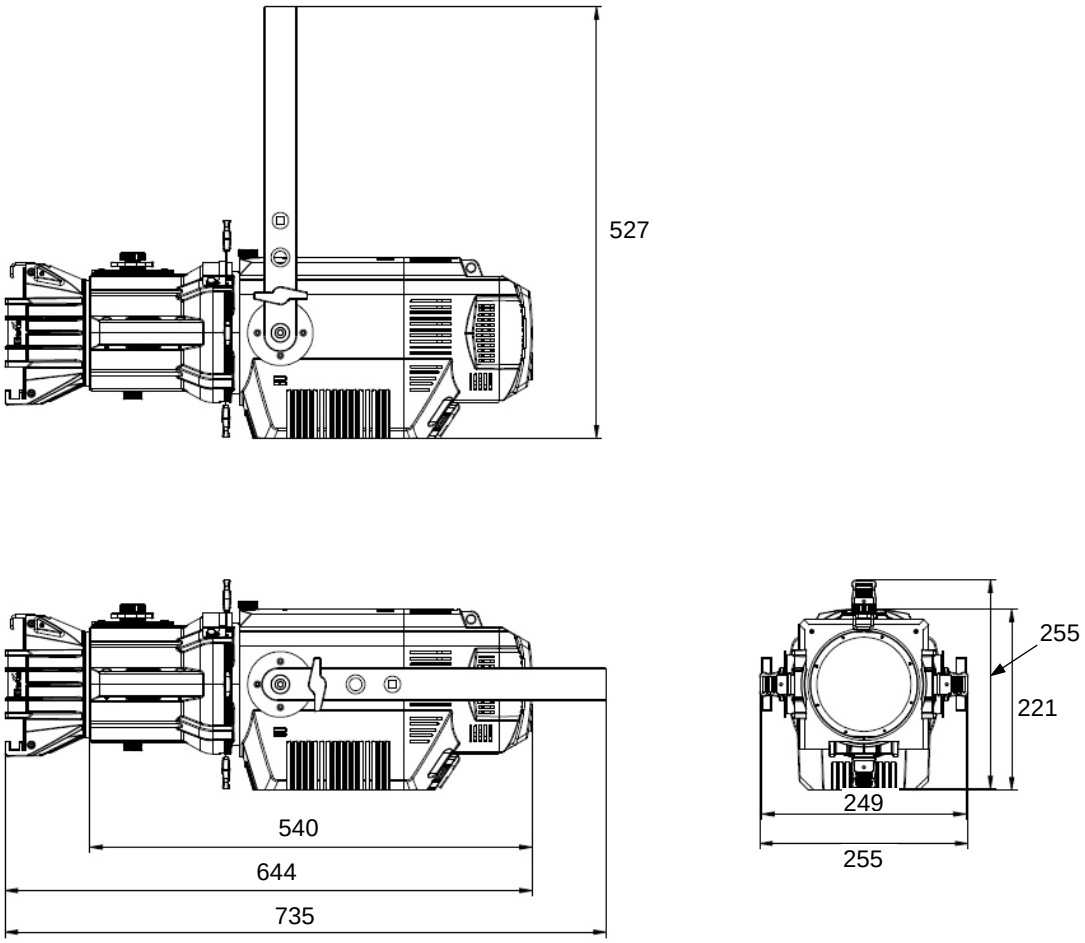

All dimensions are given in millimeters.

© 2018-2020 HARMAN® Professional Denmark ApS. Information subject to change without notice. HARMAN Professional Denmark and all affiliated companies disclaim liability for any injury, damage, direct or indirect loss, consequential or economic loss or any other loss occasioned by the use of, inability to use or reliance on the information contained in this manual. Martin®, HARMAN and all other trademarks in this document pertaining to services or products by Martin Professional or its affiliates and subsidiaries are registered as the property of HARMAN Professional Denmark.

HARMAN PROFESSIONAL DENMARK ApS, Olof Palmes Alle 44, 8200 Aarhus N, Denmark
HARMAN PROFESSIONAL SOLUTIONS U.S., 8500 Balboa Blvd., Northridge CA 91329, USA
www.martin.com

Table of contents

Dimensions 2
Safety information 5
Introduction 9
Before using the product for the first time 9
Fixture overview 10
Physical installation 11
Fixture location 11
Mounting the fixture 11
Fastening the fixture to a flat surface 11
Mounting the fixture on a truss 12
Securing with a safety cable 12
Changing the lens tube 13
AC power 14
Linking fixtures to power in a chain 14
Control data 16
Tips for reliable data transmission 16
Connecting the DMX data link 16
Fixture Setup 17
Using the control menus 17
Control panel display 17
Fast focus mode 18
Setting DMX address 18
Setting DMX personality 18
Other fixture settings 18
Display 20
Set all settings to factory default 20
Fixture test 20
Fixture information 20
Viewing live DMX values 20
Setting control values manually 20
Reset 20
Setting values 20
Setting options by RDM 22
Scanning for RDM devices on the data link 22
Getting status and setting options by RDM 22
RDM 22
Effects 24
Dimming 24
Strobe effects 24
Manual focus 24
Manual beam shaping shutters 24
Use of gobos and irises 24
Use of filters 24
Use of gobos and irises 25
Service and maintenance 25
Cleaning 26

Pressure relief valves 26
Uploading new firmware 27
Service and repairs 27
DMX protocol 28
Control menus 29
Troubleshooting 32
Specifications 33

Safety information

WARNING!

Read the safety precautions in this manual before installing, operating or servicing this product.

The following symbols are used to identify important safety information on the product and in this manual:

Warning!	**Warning!**	**Warning!**	**Warning!**	**Warning!**	**Warning!**
Safety hazard. Risk of severe injury or death.	***Powerful light emission. Risk of eye injury.***	***See user manual for important safety information.***	***Hazardous voltage. Risk of lethal or severe electric shock.***	***Fire hazard.***	***Hot surfaces.***

Warning! Risk Group 1 product according to EN 62471 and IEC/TR 62778. Do not look directly into the beam. Do not view the light output with optical instruments or any device that may concentrate the beam.

This lighting fixture is for professional use only and must be installed by a qualified technician. It is not for household use. It presents risks of severe injury or death due to fire hazards, electric shock and falls. It can create a fire hazard or a risk of eye injury if the safety precautions below are not followed.

Respect all locally applicable laws, codes and regulations when installing, powering, operating or servicing the fixture.

The product is IP65-rated. Suitable for wet locations. Do not immerse in water. Do not expose to high-pressure water or air jets.

The light source contained in this luminaire shall only be replaced by the manufacturer or his service agent or a similar qualified person.

Install, operate and service Martin® products only as directed in their user manuals, or you may create a safety hazard or cause damage that is not covered by product warranties. Follow the safety precautions listed below and observe all warnings in this manual and printed on the product. Keep this user manual for future use.

For the latest user documentation and other information about this and all Martin products, please visit the Martin website at http://www.martin.com

Technical Support

If you have questions about how to install, service or operate the fixture safely, please contact Harman Professional Technical support:

- For technical support in North America, please contact HProTechSupportUSA@harman.com / phone: (844) 776-4899
- For technical support outside North America, please contact your national distributor.

Protection from electric shock

Ensure that the fixture is electrically connected to ground (earth).

Disconnect the fixture from AC power when not in use.

Do not open the fixture or remove any cover. Refer any service operation not described in this manual to an authorized Martin Service partner.

Shut down power to the entire installation at the main power distribution board and lock out power before carrying out any installation or maintenance work.

Use only a source of AC power that complies with local building and electrical codes and has both overload and ground-fault (earth-fault) protection.

The fixture accepts AC mains power at 100-240 VAC (nominal), 50/60 Hz. Do not connect the fixture to mains power that is not within this range.

The voltage and AC frequency of the power at the MAINS OUT socket are the same as those applied at the MAINS IN socket.

Do not connect devices to power in a chain or circuit that will exceed the electrical ratings of any cable or connector used in the circuit.

The fixture's MAINS IN connector supplies mains power both to the fixture itself and to the MAINS OUT socket. The MAINS IN connector has a maximum current rating of 16 A, so you must make sure that the total current draw of any devices that are connected to the MAINS OUT socket plus the current draw of the fixture itself does not exceed 16 A total.

Power input and relay cables must be rated 16 A minimum, 12 AWG or 2.5 mm2 minimum conductor size and heat-resistant to 90° C (194° F) minimum. Cables must have three conductors and an outer cable diameter of 6 - 12 mm (0.24 - 0.47 in.). In North America the cable must be UL/CSA-recognized, hard usage, type SJT, SJOOW or better. In the EU the cable must be type HO5VV-F, H07RN-F or better.

If you connect fixtures to power in a daisy chain, use one of the 16 A rated power relay cables available as optional accessories from Martin to relay power from the fixture's MAINS OUT socket to the MAINS IN socket of the next fixture. If you link fixtures to power in a chain in this way, do not exceed the following safety limits:

- You may connect a maximum of four (4) fixtures in total to power in a chain at 100-120 V, or
- connect a maximum of nine (9) fixtures in total to power in a chain at 200-240 V.

Connect only a Neutrik powerCON TRUE1 NAC3FX-W (TOP)-type cable connector to the MAINS IN socket. Connect only a Neutrik powerCON TRUE1 NAC3MX-W (TOP)-type cable connector to the MAINS OUT socket.

Keep all connectors sealed with their rubber caps when not in use.

If operating outdoors, in wet conditions or in conditions where condensation may appear, arrange cables so that they arrive from below connectors. Create a 'drip loop' if necessary, but do not allow heavy cable runs or loops of cable to hang from connectors.

Before using the fixture, check that all power distribution equipment and cables are in perfect condition, are rated for the current requirements of all connected devices, and are of suitable type for the location (including water, pollution, temperature and UV resistance).

Isolate the fixture from power immediately if any seal, cover, cable, or other component is damaged, defective, deformed or showing signs of overheating. Do not reapply power until repairs have been completed

Do not immerse the fixture in water or any other fluid. Do not install the fixture in a location where flooding may occur.

Protection from burns and fire

Do not operate the fixture if the ambient temperature (Ta) exceeds 40° C (104° F).

The surface of the fixture can reach up to 55° C (131° F) if the fixture is operated at the maximum permitted ambient temperature.

Allow the fixture to cool for at least 5 minutes before handling.

Install the fixture on a non-combustible surface (brick, concrete, plaster etc.) only.

Do not aim the fixture towards combustible materials (fabric, wood, paper etc.) that are within 50 cm (19 in.) of the fixture.

Keep the fixture well away from flammable materials (volatile liquids etc.).

Do not expose the front glass to sunlight or any other strong light source from any angle. Lenses can focus the sun's rays inside the fixture, creating a potential fire hazard.

Ensure that there is free and unobstructed airflow around the fixture.

Allow at least 0.2 m (8 in.) free space around the fixture.

Do not attempt to bypass thermostatic switches or fuses.

Do not modify the fixture in any way not described in this manual or install other than genuine Martin parts. Do not stick filters, masks or other materials onto any lens or other optical component. Use only accessories approved by Martin to modify the light beam.

Protection from eye injury

Do not look directly into the product’s light output.

Do not look at operating light source. Eye injury may result.

Do not look at the light output with magnifiers, telescopes, binoculars or similar optical instruments that may concentrate the light output.

Ensure that persons are not looking directly into the front of the fixture when the product lights up suddenly. This can happen when power is applied, when the product receives a DMX signal, or when certain control menu items are selected.

To minimize the risk of eye irritation or injury, disconnect the fixture from power at all times when the fixture is not in use and provide well-lit conditions to reduce the pupil diameter of anyone working on or near the fixture.

Protection from injury

Fasten the fixture securely to a fixed surface or structure when in use. The fixture is not portable when installed.

Ensure that all supporting structures, surfaces, fasteners and lifting equipment can bear the weight of all the devices they are intended to support plus an adequate safety margin, and that they conform to local building and safety regulations.

If the fixture is installed in a location where it may cause injury or damage if it falls, install as described in this manual a secondary attachment such as a safety cable that is approved by an official body such as TÜV as a safety attachment for the weight that it secures. The safety cable must comply with EN 60598-2-17 Section 17.6.6 or BGV C1 / DGUV 17, and must be capable of bearing a static suspended load at least six times (or more if required by locally applicable regulations) the weight that it secures.

Eliminate as much slack as possible in the safety cable (by looping it more than once around the rigging truss, for example). Make sure that, if the primary attachment fails, the fixture cannot fall more than 20 cm (8 inches) maximum before the safety cable catches it.

If the safety cable attachment point becomes deformed, do not suspend the fixture. Have the fixture repaired by an authorized Martin service partner.

Ensure that any accessories such as gel frames, gobo holders are securely fastened.

Block access below the work area and work from a stable platform whenever installing, setting, adjusting, or cleaning the fixture.

Do not operate the fixture with missing or damaged covers, shields or any optical component.

If an operating problem occurs, stop using the fixture immediately and disconnect it from power. Do not attempt to use a fixture that is obviously damaged.

Introduction

The ELP WW IP from Martin® is an IP65-rated LED-based ellipsoidal/profile lighting fixture with a 260 W warm white LED engine that produces a sharp gobo projection with a flat field. The fixture can be used in indoor and outdoor locations.

The fixture provides a class-leading CRI of 97 at a color temperature of 3000 K with an output of 7000 lumens and has 16-bit dimming with 4 selectable curves. Its innovative features include a gear-based fine focus system which is still compatible with industry standard accessories. The fixture is ideal for theatre, gobo projection, art lighting, architectural lighting and key lighting applications.

Four fixed beam angle lens tubes and two zoom lens tubes are available for the fixture. We recommend that you order the lens tube of your choice at the same time as ordering the fixture body.

The Martin ELP WW IP can be controlled using any DMX-compliant controller and can be remotely configured by RDM. It also features stand-alone operation with capacity for up to 20 scenes.

The fixture is supplied with this user manual and a yoke for attachment of suitable user-supplied rigging clamps.

Before using the product for the first time

1. Read ‘Safety information’ on page 5 before installing, operating or servicing the fixture.
2. Unpack and ensure that there is no transportation damage before using the fixture. Do not attempt to operate a damaged fixture.
3. Before operating, ensure that the voltage and frequency of the power supply match the power requirements of the fixture.
4. If the fixture is not going to be hard-wired to a mains supply, install a local power plug (not supplied) on the end of the supplied power cable.
5. If fixtures are exposed to a sudden temperature change, give them time to warm or cool to the ambient temperature before applying power. This will help avoid damage due to condensation.
6. Check the support pages on the Martin website at www.martin.com for the most recent user documentation and technical information about the fixture. Martin user manual revisions are identified by the revision letter at the bottom of the inside cover.

Fixture overview

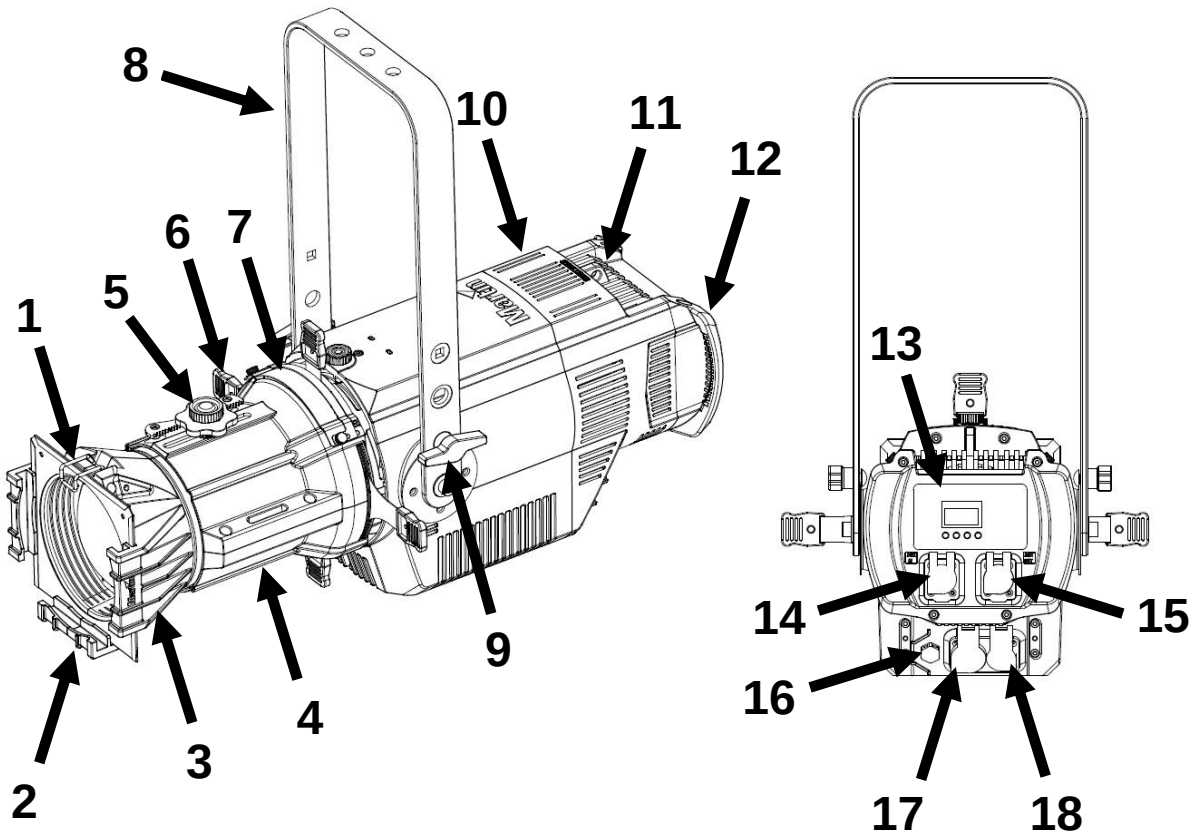

1 – Filter retaining clip
2 – Filter frame
3 – Interchangeable optical lens tube
4 – Lens tube housing
5 – Upper lens tube locking thumbscrew
Fine focus adjustment wheel
6 – Beam shaping shutter handles
7 – Gobo / accessory gate with sliding cover
8 – Mounting bracket / yoke
9 – Tilt locking knob
10 – Heatsink vent
11 – Safety cable attachment point
12 – Rear handles for positioning
13 – Control panel
14 – DMX input (5-pin XLR)
15 – DMX output (5-pin XLR)
16 – Pressure relief valve
17 – Mains power input (Neutrik powerCON TRUE1 TOP)
18 – Mains power output (Neutrik powerCON TRUE1 TOP)

Physical installation

Warning! Read ‘Safety information’ on page 5 before installing the fixture.

Warning! The safety and suitability of lifting equipment, installation location, anchoring method, mounting hardware and electrical installation are the responsibility of the installer. All local safety regulations and legal requirements must be observed when installing and connecting the fixture. Installation must be carried out by qualified professionals only.

Contact your Martin supplier for assistance if you have any questions about how to install this product safely.

Fixture location

The ELP WW IP fixture is IP65-rated. It can be used in indoor and outdoor locations. Do not immerse or expose to high-pressure water jets. The fixture requires free and unobstructed airflow around it to ensure adequate cooling.

Observe the following limitations in selecting a location:

- Respect the precautions listed under ‘Safety information’ on page 5.
- Do not locate the fixture in an unventilated space.

Warning! See drawing on right. Lenses can focus sunlight and strong light, presenting a risk of fire and damage to the fixture, creating a potential fire hazard and causing damage. Position or shade the head so that the front lens will not be exposed to sunlight or another strong light source from any angle – even for a few seconds.

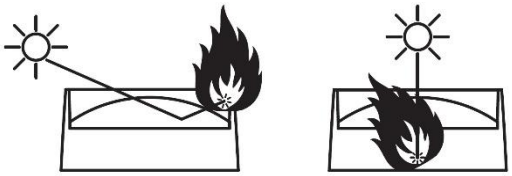

Important! Do not point the output from other lighting fixtures at the fixture, as powerful light can damage the display.

Harsh environments

The ELP WW IP has a rugged construction and is designed to withstand such outdoor conditions as high and very low temperatures, heavy rain, etc. However, it is not designed for use in extreme environments such as air with a high content of salt, chlorine, acid or other corrosive agents. Exposure to harsh environmental conditions like these may result in deterioration of the product that is not covered by the product warranty.

Mounting the fixture

Warning! All fasteners used to mount ELP fixtures must be strong enough to hold the fixture safely. They must also be suitable for the application and environment. Install a washer directly under the head of each fastener when anchoring the mounting bracket to the installation surface.

Fastening the fixture to a flat surface

The fixture can be fastened to a hard, fixed, flat surface in any orientation. Ensure that the surface and all fasteners used can support at least 10 times the weight of all fixtures and equipment they will support.

Fasten the fixture securely. Do not stand it on a surface where it may fall over. If you install the fixture in a location where it may cause injury or damage if it falls, secure it as directed below with a securely anchored approved safety cable that will hold the fixture if the primary fastening method fails.

Mounting the fixture on a truss

The fixture can be clamped to a truss or similar rigging structure in any orientation. Use a suitable rigging clamp such as a G-clamp or a half-coupler clamp (see illustration on right) fastened to the mounting yoke.

To clamp the fixture to a truss:

1. Check that the rigging structure can support at least 10 times the weight of all fixtures and equipment to be installed on it.
2. Block access under the work area.
3. Bolt a rigging clamp securely to the mounting yoke. The bolts used must be M12, grade 8.8 steel minimum, and fastened with a self-locking nut.
4. Working from a stable platform, mount the fixture on the truss and fasten the rigging clamp onto the truss.
5. Secure the fixture with a safety cable attached to the rear safety eye as shown below.

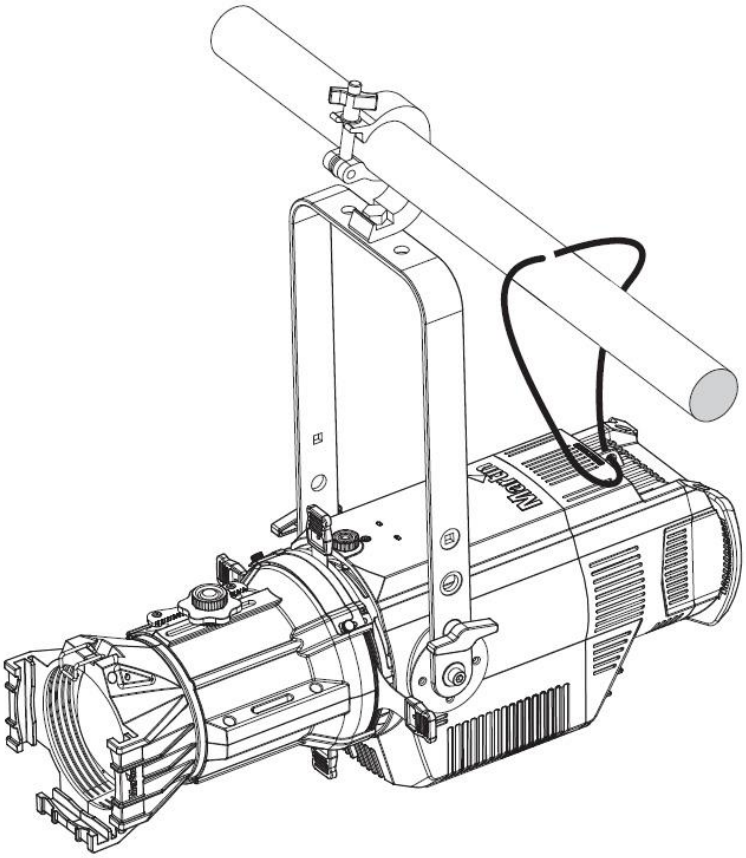

Securing with a safety cable

Secure the fixture with a safety cable (or other suitable secondary attachment) that is approved for the weight of the fixture so that the safety cable will hold the fixture if the primary attachment fails. Fasten the safety cable to the attachment eye at the rear of the fixture (see illustration above) and loop it around a secure anchoring point. Take up as much slack in the cable as possible to minimize any drop if the primary attachment fails.

If a safety cable attachment point becomes damaged or deformed, do not use the fixture. Return it to a Martin Service Centre for repair.

Changing the lens tube

Four different lens tubes with fixed beam angles of 19°, 26°, 36° or 50° are available for the fixture. Two zoom lens tubes with either 15°-30° or 25°-50° zoom ranges are also available. All lens tubes are available in black or white finish. See 'Ordering Information' on page 35 for ordering details.

To change the lens tube, refer to the diagram below:

1. Hold the front of the lens assembly with one hand so that it cannot fall out.
2. Remove the thumbwheel screws (2) and (3) on the top and bottom of the lens tube. The top screw also has the focusing knob attached.
3. Slide the lens tube forward out of the fixture.
4. Slide in the new lens tube (1).
5. Reinstall the thumbwheel screws (2) and (3). For the top screw (2), make sure that the focusing knob is in place on the screw with the gear teeth on the underside. Rotate the focusing knob until the gear teeth mesh with the bar on the lens tube housing.
6. Tighten the thumbwheel screws.

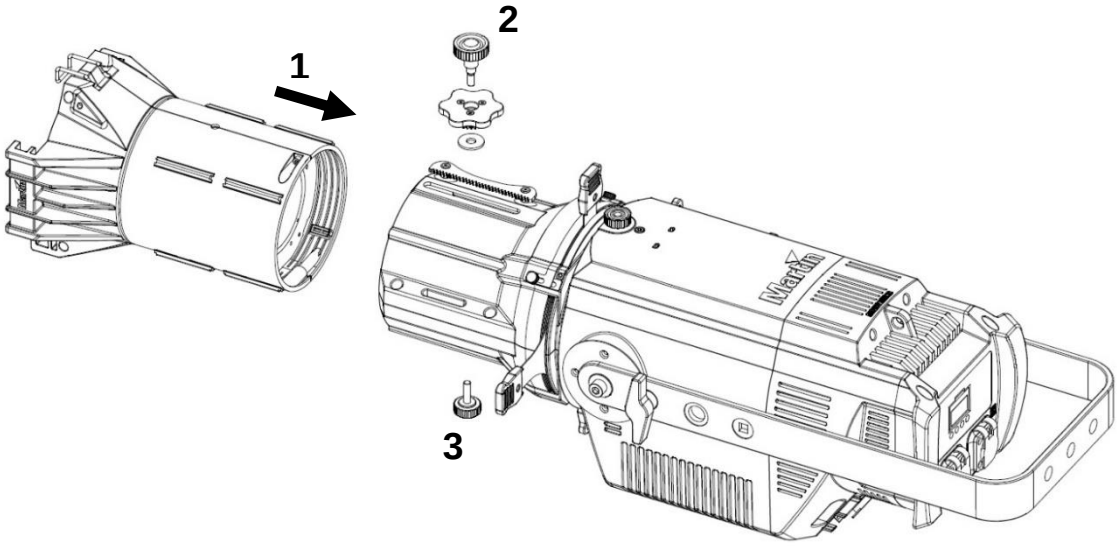

AC power

Warning! Read ‘Safety information’ on page 5 before installing the fixture.

For protection from electric shock, the fixture must be grounded (earthed). The power distribution circuit must be equipped with a fuse or circuit breaker and ground-fault (earth-fault) protection.

If you want to connect fixtures to power in a daisy-chain, use correctly dimensioned cables (see ‘Linking fixtures to power in a chain’ below) and do not exceed the limits given in this chapter.

Keep all connectors sealed with their rubber caps when not in use.

Important! Do not use an external dimming system to supply power to the fixture, as this may cause damage to the fixture that is not covered by the product warranty.

The ELP WW IP features an auto-sensing switch-mode power supply that automatically adapts to AC mains power at 100-240 VAC (nominal), 50/60 Hz. Do not connect the fixture to power that is not within this range.

The fixture requires a power input cable with a Neutrik powerCON TRUE1 NAC3FX-W (TOP) female cable connector for AC mains power input. The cable must meet the requirements listed under “Protection from electric shock” on page 5. Martin can supply suitable cables with female TRUE1 input connectors 1.5 m (4.9 ft.) or 5 m (16.4 ft.) long. Alternatively, Martin can supply loose female TRUE1 input connectors (see “Accessories” on page 34).

The fixture can be hard-wired to a building electrical installation if you want to install it permanently, or a power plug (not supplied) that is suitable for the local power outlets can be installed on the power cable. Socket outlets or external power switches used to supply the fixture with power must be located near the fixture and easily accessible so that the fixture can easily be disconnected from power.

When connecting cables to the fixture’s MAINS IN and MAINS OUT sockets, line up the keys in the cable connector with the keyways in the socket, insert the connector into the socket and twist clockwise to engage. If the connector seems difficult to twist, remove it from the socket, check that you have lined up the keyways correctly and try again – do not use excessive force. Make sure that the connector latch clicks and that the connector is locked into the socket.

If you install a power plug on the supplied power cable, install a grounding type (earthed) plug with integral cable grip that is suitable for your local mains voltage and is rated 6 A minimum. Follow the plug manufacturer’s instructions and connect the wires in the power cable as shown in this table:

	Live or L	**Neutral or N**	**Earth, Ground or ⏚**
US system	Black	White	Green
EU system	Brown	Blue	Yellow/green

Linking fixtures to power in a chain

You can connect multiple fixtures to power in a daisy chain using a relay cable to connect one fixture’s MAINS OUT socket to the next fixture’s MAINS IN socket. If you create a daisy-chain like this you must use correctly dimensioned power input and relay cables as described below.

Power input cable

If you want to draw power from the fixture’s MAINS OUT socket, you must use a correctly dimensioned input cable to supply power to the MAINS IN socket. If you daisy-chain fixtures to power, use one of the 16 amp rated 12 AWG / 2.5 mm^2 power input cables available from Martin (see ‘Accessories’ on page 34) to supply power to the first fixture.

If you install a power plug on a 12 AWG / 2.5 mm^2 power input cable, install a grounding type (earthed) plug with integral cable grip that is rated minimum 16 A, 250 V.

Power relay cables

If you connect fixtures to power in a daisy-chain, we recommend that you use the 16 amp rated 12 AWG / 2.5 mm^2 power relay cables available from Martin (see ‘Accessories’ on page 34) to link fixtures’ MAINS OUT sockets to MAINS IN sockets. Using the 16 A rated relay cables available as accessories from Martin, you can link:

- Maximum four (4) ELP WW IP fixtures in total at 100-120 V, or
- Maximum nine (9) ELP WW IP fixtures in total at 200-240 V.

Do not exceed these limits.

If you create custom power relay cables, use only the Neutrik PowerCON TRUE1 TOP connectors listed under “Accessories” on page 34.

Control data

Warning! Read ‘Safety information’ on page 5 before installing the fixture.

Keep all connectors sealed with their rubber caps when not in use.

Use only IP65-rated connectors when making data connections to the fixture.

A DMX 512 data link is required in order to control the fixture via DMX. The fixture has 5-pin XLR connectors for DMX data input and output.

Up to 32 devices can be linked together on a single daisy chain. The total number of fixtures in one 512-channel DMX universe is limited by the number of DMX channels required by the fixtures. Note that if independent control of a fixture is required, it must have its own DMX channels. Fixtures that are required to behave identically can share the same DMX address and channels. To add more fixtures or groups of fixtures when the above limits are reached, add another DMX universe or split the daisy-chained link into branches using a powered DMX splitter.

Tips for reliable data transmission

Use shielded twisted-pair cable designed for RS-485 devices: standard microphone cable cannot transmit control data reliably over long runs. 24 AWG cable is suitable for runs up to 300 meters (1000 ft.). Heavier gauge cable and/or a DMX buffer is recommended for longer runs. The pin-out on all connectors is:

- pin 1 = shield
- pin 2 = cold (-)
- pin 3 = hot (+).

Pins 4 and 5 in the XLR connectors are not used in the fixture but are passed through for possible additional data signals as required by the DMX512-A standard. Standard pin-out is pin 4 = data 2 cold (-) and pin 5 = data 2 hot (+).

To split the link into branches, use an opto-isolated splitter such as the Martin RDM 5.5 Splitter. Terminate the link by installing a termination plug in the output socket of the last fixture. The termination plug, which is a male XLR plug with a 120 Ohm, 0.25 W resistor soldered between pins 2 and 3, “soaks up” the control signal so it does not reflect and cause interference. If a splitter is used, terminate each branch of the link.

Connecting the DMX data link

To connect the fixture to DMX data:

- Connect the DMX data output from the controller to the closest fixture’s male XLR DMX input connector.
- Connect the first fixture’s DMX output to the DMX input of the next fixture and continue connecting fixtures output to input. Terminate the last fixture on the link with a DMX termination plug.

Fixture Setup

This section explains the fixture characteristics you can set that determine how it can be controlled and will behave. You choose the settings using the menus available from the control panel, and they are retained even when the fixture is powered off.

Options can also be set over the DMX line using RDM from a suitable controller, see “Setting options by RDM” on page 22.

A complete map of the control menu structure and brief explanations of their purposes can be found in “Control menus” on page 29. Only the most-used functions are described in this section.

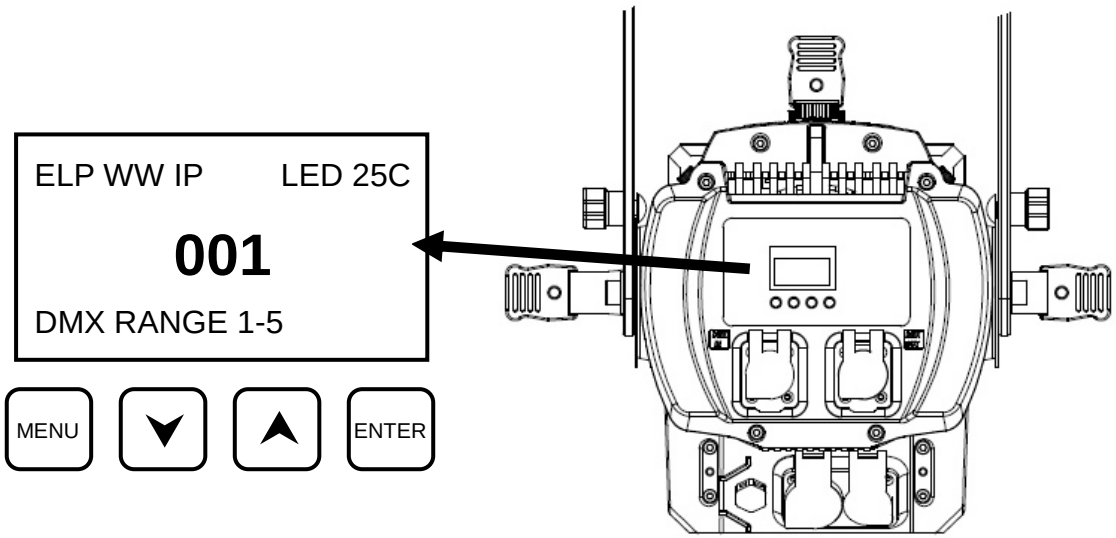

Using the control menus

See drawing above. Use the fixture’s control panel as follows:

- To access the control menus, press the MENU button.

Navigate the menu structure using the ENTER, DOWN ⮟ and UP ⮝ buttons.

- To select a menu option or to confirm a selection, press the ENTER button.
- To return to a higher level in the menu structure without making a change, press the MENU button.
- To exit the control menus completely, press and hold the MENU button.

Control panel display

See drawing above. When you power the fixture on it resets and then shows the following data in the control panel display:

- Name of product
- Temperature of LED module
- DMX address currently used
- DMX Channels currently occupied

The display flashes when the fixture is not receiving a valid DMX signal.

Fast focus mode

If you need to focus the fixture but there is nobody to operate the lighting console, you can quickly turn the fixture on in “Fast Focus mode” using the control panel. Hold down the ENTER button for 5 seconds and the fixture will come on at full brightness in open white for 60 seconds, allowing you to set the focus. After 60 seconds the fixture will return to normal operation.

Setting DMX address

Each fixture must be assigned a DMX address. The DMX address, also known as the start channel, is the first channel used to receive instructions from a DMX controller. The fixture is controlled using between 1 and 4 DMX channels depending on the personality set. If a fixture using 4 channels has a DMX address of 1, then it uses channels 1 to 4 inclusive. The following fixture in the DMX chain can then be set to a DMX address of 5.

For independent control, each fixture must be assigned its own control channels. Two fixtures of the same type may share the same address if identical behavior is desired. Address sharing can be useful for diagnostic purposes and symmetric control.

To set the fixture’s DMX address:

1. Enter the control menu and select DMX SETUP. Press ENTER.
2. Select DMX ADDRESS and press ENTER.
3. Use the UP and DOWN buttons to select the desired address setting.
4. Press ENTER to confirm your selection (or to return to the top-level menu without changing the settings, press the MENU button).

Setting DMX personality

DMX personality sets how many control channels are used. There are 3 personalities to choose from:

- 1 channel – Dimmer only
- 2 channel – 8-bit dimmer with adjustment of dimmer fade times
- 4 channel – 16-bit dimmer with shutter and adjustment of dimmer fade times (4-channel is the default mode)

The function of each channel is described in the section “DMX protocol” on page 28.

To set the DMX personality:

1. Enter the control menu and select DMX SETUP. Press ENTER.
2. Select DMX MODE and press ENTER.
3. Use the UP and DOWN buttons to select 1, 2 or 4.
4. Press ENTER to confirm your selection (or to return to the top-level menu without changing the settings, press the MENU button).

Other fixture settings

The PERSONALITY menu allows you to set other options for the fixture.

Stand-alone mode

The fixture can operate in stand-alone mode allowing control of multiple fixtures from a single master fixture if no DMX console is connected. The options are OFF (default), MASTER and CLIENT. Stand-alone operation will be automatically overridden by incoming DMX signal.

Dimming curves

Four dimming modes are available:

LINEAR	The increase in light intensity appears to be linear as DMX value is increased.
SQUARE LAW	light intensity control is finer at low levels and coarser at high levels.
INV SQ LAW	(Inverse square law) light intensity control is coarser at low levels and finer at high levels.
S-CURVE	light intensity control is finer at low levels and high levels and coarser at medium levels.

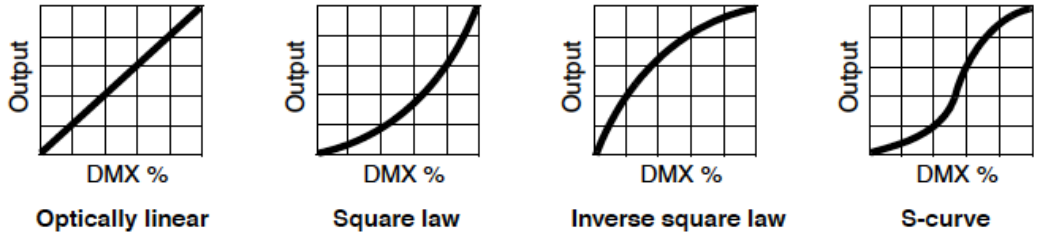

To set the fixture's dimmer curve, select DIMMER CURVE from the PERSONALITY menu and press ENTER to confirm. Use the UP and DOWN buttons to select the desired mode. Press ENTER to save your selection.

PWM Frequency

Sets the frequency of the PWM dimming used on the fixture. It can sometimes be necessary to change this if flickering is seen on TV cameras running at a high shutter speed.

The PWM frequency settings available range from 600 Hz to 1200 Hz. The default frequency is 1200 Hz.

No Data Mode

This option sets what will happen when no DMX data is present.

To set No Data Mode, select NO DATA MODE from the PERSONALITY menu and press ENTER to confirm. Use the UP and DOWN buttons to select:

- BLACKOUT – If data connection is lost, fixture blacks out.
- HOLD – If data connection is lost, fixture obeys the last DMX commands received on all channels (default).

Press ENTER to confirm.

Cooling Mode

This option sets whether cooling fan speed is regulated depending on fixture temperature or whether the cooling fans run at a constant speed.

To set cooling mode, select COOLING MODE from the PERSONALITY menu and press ENTER to confirm. Use the UP and DOWN buttons to select:

- REGULATED FANS – Fan speed is controlled by fixture temperature. Fans only run at the speed necessary to keep the fixture within its normal operating temperature range. Light output is not reduced unless full fan speed is not enough to keep the fixture within its safe operating temperature range.
- FULL – Fans are set to constant full speed. Light output is not reduced unless full fan speed is not enough to keep the fixture within its safe operating temperature range.
- LOW – Fans are set to constant low speed. The maximum light output available is reduced by approx. 15% and fan noise is significantly reduced.

Press ENTER to confirm.

Display

This option allows you to set some parameters for the display screen.

Select DISPLAY from the PERSONALITY menu and press ENTER to confirm.

Use the UP and DOWN buttons to select:

- DISPLAY SLEEP – Use the UP and DOWN buttons to select display sleep time, settings are ON (Display permanently on), 2 MINUTES, 5 MINUTES or 10 MINUTES
- DISPLAY ROTATION –Use the UP and DOWN buttons to select Normal (Display orientation normal) or ROTATE 180 (Display orientation rotated 180°)
- DISPLAY INTENSITY –Use the UP and DOWN buttons to adjust display intensity from 10%-100% (default = 100%)
- TEMPERATURE UNIT – Use the UP and DOWN buttons to select °C or °F

Press ENTER to confirm.

Set all settings to factory default

To return all settings to factory default, select DEFAULT SETTINGS and press ENTER to confirm, FACTORY DEFAULT will show on the display. Press ENTER again.

Use the UP and DOWN buttons to select NO (cancel) or YES (return all settings except calibrations to factory defaults).

Press ENTER to confirm (or press MENU to exit without making a change).

Fixture test

This menu allows you to run self-test sequences on the fixture's LED emitters. Each color of emitters will be switched on in turn.

Fixture information

The INFORMATION menu allows you to view various fixture information: Power on time, LED hours, Software version, Fixture ID, RDM unique ID, Fan speeds, temperatures.

Viewing live DMX values

This menu allows you to view the current DMX values for any function.

Select the DMX LIVE menu and press ENTER.
Use the UP and DOWN buttons to select the function you wish to view.

Setting control values manually

You can manually set control values. This may be useful when testing, or to use the fixture in a static setting without a DMX controller.

This menu also allows you to reset the fixture.

Reset

To reset the fixture, go to the MANUAL CONTROL menu and press ENTER. Use the UP and DOWN buttons to select RESET and press ENTER again.

Then use UP and DOWN to select YES, and press ENTER to activate.

Setting values

Go to the MANUAL CONTROL menu and press ENTER. Use the UP and DOWN buttons to select the function you wish to control.

Once you have selected a function, press ENTER, then use the UP and DOWN buttons to select a value from 0 to 255.

Press MENU to go back up and select a different function to control.

Calibration

From the SERVICE menu you can select CALIBRATION. This menu allows you to adjust the overall brightness of the fixture to match with other fixtures. The fixture is calibrated in the factory but over time the brightness of the LED emitters will gradually reduce, so this function can be useful if you need to match a new fixture with older ones.

- DIMMER sets the overall maximum brightness of the fixture.
- WHITE (available from firmware v. 1.2) gives fine adjustment of the fixture's color temperature.
- LOAD DEF will load the factory-set calibration values. If you have replaced the factory-set values with custom values using SAVE SET (see below) it will load the custom values.
- SAVE SET replaces the factory-set DIMMER and WHITE values with any custom values that have currently been set.

You must enter a password (019 by default) before you can access the SAVE SET menu item.

Important! The SAVE SET command permanently overwrites the factory-set calibration values. It is not possible to restore the factory-set values by powering the fixture off and on, resetting the fixture or uploading new firmware. Once you have saved custom calibration values using SAVE SET, the only way to return to the original factory-set values is to re-adjust the DIMMER and WHITE calibration settings back to their original values.

Setting options by RDM

You can remotely configure the fixture over the DMX line using a suitable RDM-compatible controller that is connected to the installation via a DMX data link.

A full list of the RDM functions that the ELP fixture supports is given at the end of this chapter. These functions are generally referred to using the more specific term ‘PIDs’ or ‘Parameter IDs’.

Scanning for RDM devices on the data link

Before you can communicate with fixtures using RDM, you must send a scan command (also called a device discovery command) to all the devices on the data link so that the RDM controller can identify them. It does this by retrieving each device’s factory-set unique identifier (UID). This process can take some time depending on the number of devices on the link.

Getting status and setting options by RDM

The status and options listed in the table below can be read and set by RDM.

You can set an option on one fixture by sending a unicast RDM command to that one fixture only, or you can set the same option on all the fixtures on the data link by sending a broadcast RDM command to all the devices on the link.

For status reading, you can only use unicast RDM to read information from an individual fixture.

RDM

As a minimum, the ELP WW IP supports the following RDM functions:

Device discovery

DISC_UNIQUE_BRANCH
DISC_MUTE
DISC_UN_MUTE

Device management

	GET	SET
QUEUED_MESSAGE	✓	
STATUS_MESSAGES	✓	
STATUS_ID_DESCRIPTION	✓	
SUPPORTED_PARAMETERS	✓	
DEVICE_INFO	✓	
DEVICE_MODEL_DESCRIPTION	✓	
MANUFACTURER_LABEL	✓	
DEVICE_LABEL	✓	✓
SOFTWARE_VERSION_LABEL	✓	
BOOT_SOFTWARE_VERSION_ID	✓	
BOOT_SOFTWARE_VERSION_LABEL	✓	
DMX_PERSONALITY	✓	✓

DMX_START_ADDRESS	✓	✓
DEVICE_HOURS	✓	✓
IDENTIFY_DEVICE	✓	✓
LAST_STATE		✓
DIMMER_CURVE		✓

Effects

This section describes the effects provided by the ELP WW IP fixture. See ‘DMX protocol’ on page 28 for a full list of the DMX channels and values required to control the different effects.

Dimming

Overall intensity can be precisely adjusted from 0 to 100% using 16-bit coarse and fine control. In 1Ch or 2Ch mode the control is 8-bit. In 1Ch mode this is the only control.

Strobe effects

An electronic shutter provides instant open and blackout, random and variable speed flash from 1 to 12 flashes per second, and pulse effects.

Manual focus

The ELP WW IP has a unique “Fine Focus” system which allows you to easily make small focus adjustments using a gear-based wheel on top of the lens tube. To focus the fixture, see drawings below. Loosen the thumbscrews **A** and **B** on the top and bottom of the lens tube slightly, then turn the focus wheel **C** to slide the lens in or out of the tube. Tighten the thumbscrews **A** and **B** again to hold the focus setting.

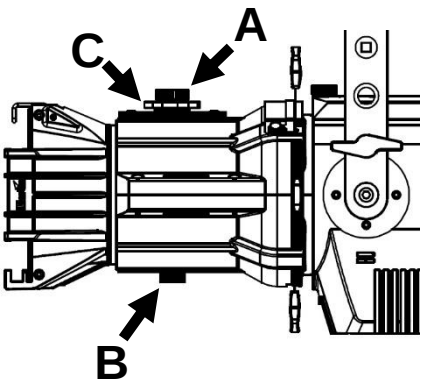

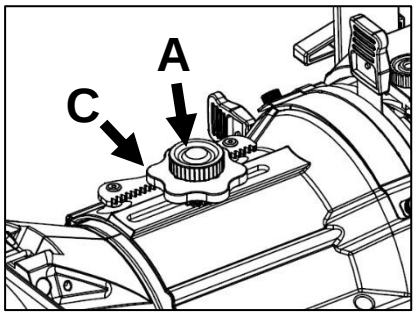

Manual beam shaping shutters

The fixture has 4 manually operated beam shaping shutters.

To change the shape of the beam, power the fixture on and aim the beam at the target. Use the four shutter blade handles (see **6** in ‘Fixture overview’ on page 10) to adjust the position of the shutter blades and obtain the desired beam shape.

Use of gobos and irises

The fixture will accept a standard A-size or B-size goboholder or an iris (items not included) in the gobo/accessory gate. There is a sliding cover over the gate to prevent light spill and retain the gobo holder in the fixture. To open the cover, loosen the two thumbscrews at the sides of the cover and slide it towards the lens. When the gobo holder or accessory is installed, slide the cover back so it holds the gobo in place and tighten the thumbscrews.

Use of filters

The filter frame that is supplied with the lens tube lets you add color or diffusion filters to the front of the fixture. Push the filter retaining clip (see **1** in ‘Fixture overview’ on page 10) to one side to insert and remove filters. Click the retaining clip back into place after inserting a filter and check that the clip is secure to prevent the color filter frame from falling out.

Use of gobos and irises

The fixture will accept an A-size or B-size goboholder or an iris (items not included with the fixture) in the gobo/accessory gate. There is a sliding cover over the gate to prevent light spill and retain the gobo holder in the fixture. To install a goboholder or iris:

1. Allow the fixture to cool. See drawing below. Loosen but do not remove the two thumbscrews **A** at the sides of the lens tube housing **B,** then slide the lens tube housing towards the front of the fixture.
2. Slide the goboholder **C** into the accessory gate in the fixture.
3. Slide the lens tube housing **B** back towards its original position so that it holds the goboholder in place and re-tighten the thumbscrews **A**.

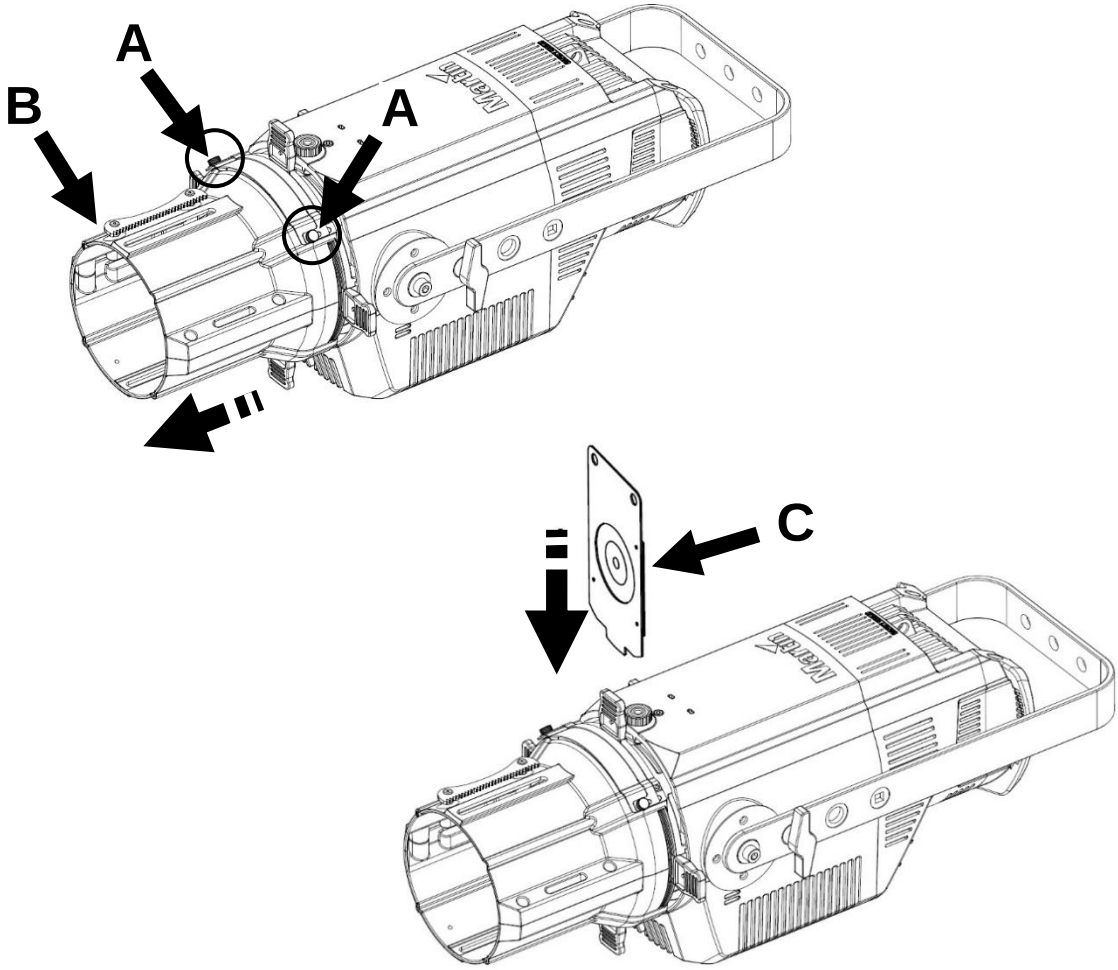

Service and maintenance

Warning! Read ‘Safety information’ on page 6 before servicing the fixture.

Refer any service operation not described in this user manual to a qualified service technician.

Excessive dust, smoke fluid, and particle buildup degrades performance, causes overheating and will damage the fixture. Damage caused by inadequate cleaning or maintenance is not covered by the product warranty.

Disconnect mains power before cleaning or servicing the fixture.

You can rinse the fixture with water, but do not use high-pressure water or air jets during cleaning.

Service fixtures in an area where there is no risk of injury from failing parts, tools or other materials.

Cleaning

The cleaning of external optical lenses must be carried out periodically to optimize light output. Cleaning schedules for lighting fixtures vary greatly depending on the operating environment. It is therefore impossible to specify precise cleaning intervals for the fixture. Environmental factors that may result in a need for frequent cleaning include:

- Use of smoke or fog machines.
- High airflow rates (near air conditioning vents, for example).
- Presence of cigarette smoke.
- Airborne dust (from stage effects, building structures and fittings or the natural environment at outdoor events, for example).

If one or more of these factors is present, inspect fixtures within their first 100 hours of operation to see whether cleaning is necessary. Check again at frequent intervals. This procedure will allow you to assess cleaning requirements in your particular situation. If in doubt, consult your Martin dealer about a suitable maintenance schedule.

Use gentle pressure only when cleaning, and work in a clean, well-lit area. Do not use any product that contains solvents or abrasives, as these can cause surface damage.

To clean the fixture:

1. Disconnect the fixture from power and allow it to cool for at least 10 minutes.
2. Vacuum or gently blow away dust and loose particles from the outside of the fixture and the air vents at the back and sides of the head and in the base with low-pressure compressed air.
3. Clean the lens by wiping gently with a soft, clean lint-free cloth moistened with a weak detergent solution. Do not rub the surface hard: lift particles off with a soft repeated press. Dry with a soft, clean, lint-free cloth or low-pressure compressed air. Remove stuck particles with an unscented tissue or cotton swab moistened with glass cleaner or distilled water. You can remove the lens tube to clean the rear side of the lens if needed.

Pressure relief valves

A valve with a gas-permeable but waterproof membrane manufactured by Gore equalizes pressure by allowing air and water vapor to pass into and out of the fixture when it heats up and cools down, but it acts as a barrier to water in liquid form. The expulsion of warm air (with a slightly higher water vapor content) and intake of cool air (with a slightly lower water vapor content) prevents humidity buildup over time, provided that the valves work correctly and that the fixture is correctly sealed.

Valves become blocked over time as the micropores in the membranes fill with dirt particles. If a valve becomes blocked, excess pressure can cause water to be sucked into the fixture and damage seals. Valves cannot be cleaned – they are service items that require occasional replacement. It is impossible to give precise replacement intervals because environment and conditions of use vary, but if the fixture is used in an environment where airborne dust or dirt is present, we recommend that you replace the valves with their rubber seals at each major service

interval. If heavy dust or dirt is present and the fixture is powered on and off frequently you should monitor a potential need for valve replacement carefully. If any valve shows signs of contamination or is not in perfect condition, replace it immediately.

New pressure relief valves are available from Martin (see “Spare parts” on page 35).

Uploading new firmware

Martin releases new firmware (fixture software) from time to time if it can improve functionality of Martin fixtures. All firmware versions are available from the Martin website. You can install firmware using a Windows PC running the Martin Companion software suite with a Martin Companion Cable USB/DMX hardware interface connected to the DMX link or directly to the fixture’s DMX IN connector.

You can check the currently installed firmware version in the INFORMATION menu in the fixture’s control panel.

If you update firmware to a newer version, check the ELP area of www.martin.com to see whether an updated version of this User Manual is available for the new firmware.

Installing using a PC running Martin Companion

Important! Do not switch the fixture off or disconnect the source of the firmware during an upload, or the firmware will be corrupted.

The following are required in order to install firmware using a PC:

- A Windows PC running the latest version of the Martin Companion software suite (available for download from the Martin website at www.martin.com).
- The latest ELP WW IP firmware file. Martin Companion automatically downloads this file from the Martin fixture firmware cloud when Martin Companion is launched on a PC that is connected to the Internet.
- A Martin Companion Cable USB-DMX hardware interface, available from your Martin supplier by ordering P/N 91616091.

To install the firmware using Martin Companion:

4. Apply power to the fixture(s) and allow to boot. Connect the Martin Companion Cable hardware interface to your PC and to the fixture’s DMX IN connector or to the DMX link. All ELP fixtures that are powered on and connected to the DMX link will have their firmware updated.
5. Start the PC and launch the Martin Companion application.
6. Locate the latest firmware in the Martin Companion application (*Firmware → ELP → ELP WW IP*).
7. Start the firmware upload by clicking *Update Firmware* in the Martin Companion application. Do not disconnect the Martin Companion cable or power off the fixture(s) until the upload is complete and the fixture(s) has successfully rebooted.
8. If you are updating multiple fixtures over a DMX link, check that they have all rebooted correctly.

Service and repairs

There are no user-serviceable parts inside the fixture. Do not open the housing.

Do not try to repair the fixture by yourself as this may result in damage, malfunction and it may potentially void your product warranty. The equipment must only be serviced or repaired by an authorized Martin service technician.

Installation, on-site service and maintenance can be provided worldwide by the Martin Professional Global Service organization and its approved agents, giving owners access to Martin’s expertise and product knowledge in a partnership that will ensure the highest level of performance throughout the product’s lifetime. Please contact your Martin supplier for details.

DMX protocol

Channel			DMX range	Function
1CH	*2CH*	*4CH*		
1	*1*	*1*	0-255	Dimmer 0-100%
		2	0-255	Dimmer Fine
		3		Shutter
			000-031	Blackout
			032-063	Open
			064-095	Strobe (Slow-Fast)
			096-127	Open
			128-159	Pulse effect in sequences
			160-191	Open
			192-223	Random strobe effect (Slow-Fast)
			224-255	Open
	2	*4*	0-255	Dimmer fade time

Control menus

To access the control menus, press the MENU button. Use the UP and DOWN buttons to navigate the menus. Select any required menu option using the ENTER button. For more information, see ‘Using the control menus’ on page 17.

Default fixture settings are shown in **bold**.

Top Menu	Menu level 2	Menu level 3	Menu level 4	Notes
DMX Setup	DMX Addr	**1** - XXX		DMX address **(default address = 1)**. The DMX address range is limited so that the fixture will always have enough DMX channels within the 512 available.
	DMX Mode	1CH/2CH/**4CH**		DMX control mode
Personality	Stand-Alone	**Off**		
		Master		Fixture acts as master in master/client operation - DMX/RDM signal will override master/client operation
		Client		Fixture copies master in master/client operation - DMX/RDM signal will override master/client operation
	Dim Curve	Linear		Optically linear dimming curve
		Square		Square law dimming curve
		Inv Sq		Inverse square law dimming curve
		S-Curve		S-curve (fixture emulates incandescent lamp voltage linear RMS dimming curve)
	PWM Freq	600-1200Hz		LED PWM frequency (Default = 1200 Hz)
	No Data	Blackout		If data connection is lost, fixture will blackout
		Hold		If data connection is lost, fixture holds latest received data value at all channels

Personality (continued)	Cool Mode	**Reg fan**		Fan optimized for light intensity (temperature is controlled by regulating fan speed, light output is unaffected)
		Full		Fans set to full/low constant speed (temperature is controlled by regulating light output).
		Low		
	Display	Sleep	On	Display remains permanently on
			2 min	Display goes into sleep mode 2 minutes after last key press
			5 min	Display goes into sleep mode 5 minutes after last key press
			10 min	Display goes into sleep mode 10 minutes after last key press
		Rotation	**Normal**	Display orientation normal
			Rotate 180	Display orientation rotated 180°
		Intensity	10-**100**	Set display intensity in % (default = 100)
		Temp Unit	**°C**	All temperature readouts in C°
			°F	All temperature readouts in F°
Default settings	Fac Default	**No**		
		Yes		Return all settings to factory defaults
Fixture test	Test LEDs			Run test sequence of LEDs, Dimmer and Strobe effect. Press Enter to restart test sequence. Press Menu button to exit test.
Information	Power On	0 - XXXX h		Hours fixture has been powered on since manufacture (not user-resettable)
	LED Hours	0 - XXXX h		Number of hours fixture LEDs have been powered on since manufacture (not user-resettable)
	SW Version	XX.XX.XX		Displays currently active software version

Information (continued)	Fixture ID	0 - 9999		User-settable fixture ID number
	RDM UID	XXXXXXXXXXXX		Displays fixture's unique RDM ID
	Temperature	LED / CPU Temp		Displays temperature in °C of all PCBs and LED
DMX Live	Dimmer, Shutter etc. …..	0 - 255 …		Scroll to see values being received on each DMX channel
Manual Ctrl	Reset	**No**		
		Yes		Reset fixture
	Dimmer, Dimmer Fine, Shutter, Dimmer Fade	0-255		Manual control of all 4 channels
Service	Calibration	Dimmer	0-**100** %	Intensity master, sets maximum permitted intensity
		White	0-255	White CT calibration
		Load Def	Load	Load factory calibration settings
		-Password-	XXX	Enter password (019) for access to Save Set
		Save Set		Replace factory calibration settings with current calibration settings

Troubleshooting

This section describes a few common problems that may occur during operation and provides some suggestions for easy troubleshooting:

Symptom	Potential cause	Remedies
No light from fixture.	Shutters are all pushed in, blocking the light.	Pull out the 4 shutter blades.
	Power supply issue, such as blown fuse, faulty connector or damaged cable.	Ensure that the mains supply is connected and supplying power to the fixture. Ensure that the fixture's display screen lights up when a button is pressed. Check all power connections and cables. Replace the fixture fuse.
Fixture does not respond to DMX control.	Fault in the DMX network due to wiring problem, connector or cable damaged, or…	Check if the fixture display is flashing to show that DMX is not being received, and if so, check all DMX cables and connections to ensure the integrity of the physical network. Ensure that the DMX network is terminated. Check that the components in the DMX network all use standard DMX polarity.
	incorrect DMX addressing, or…	Ensure that the fixture is set to the correct DMX address, one that matches that set on the DMX control device. Check the pins on the connectors from the previous fixture in the DMX network. Attempt to control the fixture with another DMX control device.
	…potential interference from proximity to a high-voltage installation.	Move the fixture if it is being operated very close to an unshielded high-voltage installation.

Specifications

Physical

Length	644 mm (25.4 in.)
Width	255 mm (10.1 in.)
Height	255 mm (10.1 in.)
Height (with bracket)	527 mm (20.1 in.)
Weight	11 kg (24.3 lb.)

Dynamic Effects

Electronic dimming	0 - 100%
Strobe and pulse effects	Variable speed and action, random strobe
Electronic 'shutter' effect	Instant open and blackout
Electronic dimming	Four dimming curve options

Control and Programming

DMX channels	1/2/4
16-bit control	Intensity
Control options	DMX, stand-alone
PWM	600-1200 Hz
DMX address setting	Control panel with OLED display or via RDM
Stand-alone programming	Control panel with OLED display
DMX compliance	USITT DMX512-A
RDM compliance	ANSI/ESTA E1.20
Transceiver	Opto-isolated RS-485

Optics

Light source	91 x 3 W warm white LEDs
Color Temperature	3000 K
Lens Tube Options	19°, 26°, 36°, 50°, 15-30° zoom, 25-50° zoom
Minimum LED lifetime	30 000 hours (to >70% luminous output)*

**Figure obtained under manufacturer's test conditions:*

Photometric Data

Light engine luminous output	16 000 lumens
Fixture luminous output	7000 lumens
CRI (Color Rendering Index)	>97
CQS (Color Quality Scale)	>93
TM-30 Rf (IES TM-30-15 Fidelity Index)	>93
TM-30 Rg (IES TM-30-15 Gamut Index)	>101
TLCI (Television Lighting Consistency Index)	>96

Construction

Color(s)	Black or white variant
Housing	Die-cast aluminum
Protection rating	IP65

Gobos and Color Frame

Gobo size	A size, 100 mm OD, 75 mm image*
Gobo size	B size, 86 mm OD, 64.5 mm image*
Color frame size	159 x 159 mm (6.25 in. x 6.25 in.)

** Goboholder not included*

Installation

Mounting	Adjustable bracket
Location	Indoor, outdoor use, suitable for wet locations
Orientation	Any
Minimum distance to combustible materials	0.2 m (0.7 ft.)

Minimum distance to illuminated surfaces ..... 0.5 m (1.6 ft.)

Connections

AC power in/thru ..... IP65-rated Neutrik PowerCON TRUE1 TOP
DMX & RDM data in/thru ..... IP65-rated 5-pin XLR

Electrical

AC power .....100-240 V nominal, 50/60 Hz
Power supply unit .....Auto-ranging electronic switch-mode
Idle power (zero intensity) ..... 5 W
Half-cycle RMS inrush current at 230 V, 50 Hz ..... 18.0 A
Fixture link via PowerCON at 100-120 V ..... Up to 4 fixtures
Fixture link via PowerCON at 200-240 V ..... Up to 9 fixtures

Power consumption figures are typical, not maximum. Allow for +/-10% variation.

Typical Power and Current

110 V, 60 Hz .....2.6 A, 280 W, PF 0.99
208 V, 60 Hz .....1.4 A, 270 W, PF 0.97
230 V, 50 Hz .....1.2 A, 269 W, PF 0.96
240 V, 50 Hz .....1.2 A, 268 W, PF 0.96

Measurements made at nominal voltage with all LEDs at full intensity. Allow for a deviation of +/- 10%.

Thermal

Cooling .....Forced air (temperature-regulated, low noise)
Maximum ambient temperature (Ta max.)..... 40° C (104° F)
Minimum ambient temperature (Ta min.)..... 0° C (32° F)
Total heat dissipation (calculated, +/- 10%, at full intensity, full white).....1000 BTU/hr.

Approvals

Global CB Certification/IECEE ..... IEC 60598-2-17 (IEC 60598-1)
EU safety.....EN 60598-2-17 (EN 60598-1), EN 62471, EN62493
EU EMC ..... EN 55015, EN 55032, EN 55035,
EN 61000-3-2, EN 61000-3-3, EN 61547
US safety.....UL 1573
US EMC .....FCC Part 15 Class B
Canadian safety .....CSA C22.2 No. 166
Canadian EMC..... ICES-3 (B)/NMB-3 (B); ICES-5 (B)/NMB-5 (B)
Australia/NZ ..... RCM

Included Items

Mounting bracket
User manual

Accessories

Power cables, 16 A

Power input cables*

Power Input Cable, H07RN-F, 2.5 mm2, bare ends to
TRUE1 NAC3FX-W (female), 1.5 m (4.9 ft.) ..... P/N 91611797
Power Input Cable, H07RN-F, 2.5 mm2, bare ends to
TRUE1 NAC3FX-W (female), 5 m (16.4 ft.) ..... P/N 91611786
Power Input Cable, SJOOW, 12 AWG, bare ends to
TRUE1 NAC3FX-W (female), 1.5 m (4.9 ft.) ..... P/N 91610173
Power Input Cable, SJOOW, 12 AWG, bare ends to
TRUE1 NAC3FX-W (female), 5 m (16.4 ft.) ..... P/N 91610174

Power relay cables*

Power Relay Cable, H07RN-F, 2.5 mm^2, TRUE1-TRUE1 0.45 m (1.5 ft.) ... P/N 91611784
Power Relay Cable, H07RN-F, 2.5 mm^2, TRUE1-TRUE1 1.2 m (3.9 ft.) ..... P/N 91611785
Power Relay Cable, H07RN-F, 2.5 mm^2, TRUE1-TRUE1 2.5 m (8.2 ft.) ..... P/N 91611796

Power Relay Cable, SJOOW, 12 AWG, TRUE1-TRUE1, 0.45 m (1.5 ft.).... P/N 91610170
Power Relay Cable, SJOOW, 12 AWG, TRUE1-TRUE1, 1.2 m (3.9 ft.)..... P/N 91610171
Power Relay Cable, SJOOW, 12 AWG, TRUE1-TRUE1, 2.5 m (8.2 ft.)..... P/N 91610172

Power connectors*

Neutrik PowerCON TRUE1 NAC3MX-W (male) ..... P/N 91611788HU
Neutrik PowerCON TRUE1 NAC3FX-W (female) ..... P/N 91611789HU

All TRUE1 connectors are IP65-rated TOP type

Spare parts

Pressure Relief Valve with Gore membrane, M12 x 1.5..... P/N 5127883-00

Related Items

Martin RDM 5.5 Splitter..... P/N 90758150
Martin Companion Cable ..... P/N 91616091
Martin Companion software suite .....Free download from www.martin.com

Ordering Information

Fixtures without lens tubes

Martin ELP WW IP (fixture body only) ..... P/N 9045122813
Martin ELP WW IP (fixture body only), White..... P/N 9045122815

Lens tube options*

Martin ELP Lens Tube 19°..... P/N 9045107782
Martin ELP Lens Tube 26°..... P/N 9045107783
Martin ELP Lens Tube 36°..... P/N 9045107784
Martin ELP Lens Tube 50°..... P/N 9045107785
Martin ELP Lens Tube 19°, White ..... P/N 9045115166
Martin ELP Lens Tube 26°, White ..... P/N 9045115167
Martin ELP Lens Tube 36°, White ..... P/N 9045115168
Martin ELP Lens Tube 50°, White ..... P/N 9045115170
Martin ELP Zoom Lens Tube 15-30° ..... P/N 9045121618
Martin ELP Zoom Lens Tube 15-30°, White..... P/N 9045122108
Martin ELP Zoom Lens Tube 25-50° ..... P/N 9045121619
Martin ELP Zoom Lens Tube 25-50°, White..... P/N 9045122109

**All lens tubes are supplied complete with filter frames*

Specifications are subject to change without notice. For the latest product specifications, see www.martin.com.

Supplier’s declaration of conformity

Harman Professional, Inc. have issued an FCC Supplier’s Declaration of Conformity for this product. The Declaration of Conformity is available for download from the product’s pages on the Martin website at www.martin.com.

Disposing of the product

Martin products are supplied in compliance with Directive 2012/19/EC of the European Parliament and of the Council of the European Union on WEEE (Waste Electrical and Electronic Equipment), where applicable. Help preserve the environment! Ensure that this product is recycled at the end of its life. Your supplier can give details of local arrangements for the disposal of Martin products

Radio interference

This equipment has been tested and found to comply with the limits for a Class B digital device, pursuant to part 15 of the FCC Rules. These limits are designed to provide reasonable protection against harmful interference in a residential installation. This equipment generates, uses and can radiate radio frequency energy and, if not installed and used in accordance with the instructions, may cause harmful interference to radio communications. However, there is no guarantee that interference will not occur in a particular installation. If this equipment does cause harmful interference to radio or television reception, which can be determined by turning the equipment off and on, the user is encouraged to try to correct the interference by one or more of the following measures:

- Reorient or relocate the receiving antenna.
- Increase the separation between the equipment and receiver.
- Connect the equipment into an outlet on a circuit different from that to which the receiver is connected.
- Consult the dealer or an experienced radio/TV technician for help.