Exterior Wash 200 Series

User manual

Martin® by HARMAN

©2015-2020 HARMAN PROFESSIONAL DENMARK ApS. All rights reserved. Features, specifications and appearance are subject to change without notice. HARMAN PROFESSIONAL DENMARK ApS and all affiliated companies disclaim liability for any injury, damage, direct or indirect loss, consequential or economic loss or any other loss occasioned by the use of, inability to use or reliance on the information contained in this document. Martin is a registered trademark of HARMAN PROFESSIONAL DENMARK ApS registered in the United States and/or other countries.

HARMAN PROFESSIONAL SOLUTIONS U.S. ● 8500 Balboa Blvd. ● Northridge ● CA 91329 ● USA

www.martin.com

Exterior Wash 200 Series User Manual, P/N 5068004, Rev. K

Table of contents

Safety information 5
Introduction 9
Fixture overview 9
Before using the product for the first time 9
Physical installation 10
Fixture location 10
Mounting the fixture 10
Adjusting tilt 11
Installing a diffuser 12
Installing a honeycomb louver 13
Installing a snoot 14
Installing a snoot over a louver 14
AC power 15
Protecting connections from moisture 15
Connecting to power 15
Control data link 17
Connecting the data link 17
Setup 19
Accessing and navigating the control menus 19
DMX settings 19
Programming a standalone show 20
Manual mode 21
Display setting 21
Automatic test 21
Fixture status 21
Fixture config 21
Setup via RDM 24
Maintenance 25
Cleaning 25
Pressure relief valve 25
Software maintenance 26
DMX protocol 27
Exterior Wash 200 and Exterior Wash 210 27
Exterior Wash 220 28
Control menus 29
Troubleshooting 31
Specifications 32

Safety information

WARNING!

Read the safety precautions in this manual before installing, operating or servicing this product.

The following symbols are used to identify important safety information on the product and in this manual:

Warning! Safety hazard. Risk of severe injury or death.

Warning! Hot surface. Risk of burns.

Warning! See user manual for important safety information.

Warning! Risk of eye injury. Wear protective eyewear.

Warning! Hazardous voltage. Risk of lethal or severe electric shock.

Warning! Do not look into light output.

Warning! Fire hazard.

Warning! Risk Group 3 (high risk) product according to EN62471 (see 'Protection from eye injury' on page 7 for full details). This lighting fixture produces intense light output that may be hazardous if suitable precautions are not taken. Do not view the light output with optical instruments or any device that may concentrate the beam. Do not look at operating light source. Eye injury may result.

This fixture presents risks of severe injury or death due to burn and fire hazards, electric shock and falls if the safety precautions in this manual are not followed.

This fixture is for professional use only and must be installed by a qualified technician. It is not for household use.

Respect all locally applicable laws, codes and regulations when installing, operating or servicing the fixture.

The light source contained in this lighting fixture shall only be replaced by the manufacturer or his service agent or a similar qualified person.

A terminal block for connection to AC mains power is not included and must be supplied by the installer.

Follow the safety precautions listed on the following pages.

Technical Support

If you have any questions about how to install or operate the fixture safely, please contact Harman Professional Technical support.

For technical support in N. America, please contact HProTechSupportUSA@harman.com
Phone: (844) 776-4899

For technical support outside North America, please contact your national distributor.

Read this manual before installing, powering or servicing the fixture. Follow the safety precautions and observe all warnings in this manual and printed on the fixture.

The latest version of this manual is available for download from the Exterior Wash 200, 210 and 220 pages of the Martin® website at www.martin.com. Before you install, operate or service an Exterior Wash 200 series fixture, check the Martin website and make sure that you have the latest user documentation for the fixture. Document revisions are indicated at the bottom of page 2.

Refer any operation not described in this user manual to Martin® Global Service or an authorized Martin service agent. The light source contained in this lighting fixture may be replaced by Martin or an authorized Martin service agent only.

Install, operate and service Martin products only as directed in their user manuals, or you may create a safety hazard or cause damage that is not covered by product warranties. Keep this user manual for future use.

Protection from electric shock

This fixture is IP66 rated. It is suitable for use in wet locations, but do not immerse it in water or install it in a location where it may become submerged.

This fixture is a Class I product according to IEC 61140. Ensure that the fixture is electrically connected to ground (earth).

Disconnect the fixture from AC power when not in use.

Supply the fixture with AC power only at the voltages specified in this user manual and on the product's serial number label.

Do not open the fixture or remove any cover. Refer any service operation not described in this manual to an authorized Martin Service partner.

Shut down power to the entire installation at the main power distribution board and lock out power before carrying out any installation or maintenance work.

Use only a source of AC power that complies with local building and electrical codes and has both overload and ground-fault (earth-fault) protection.

Isolate the fixture from power immediately if any seal, cover, cable, or other component is damaged, defective, deformed or showing signs of overheating. Do not reapply power until repairs have been completed

Before using the fixture, check that all power distribution equipment and cables are in perfect condition, are rated for the current requirements of all connected devices, are protected to IP67 or higher and are of suitable type for the location (including water, pollution, temperature and UV resistance).

Protection from burns and fire

Do not operate the fixture if the ambient temperature (Ta) exceeds 45° C (113° F).

The surface of the product can reach up to 55° C (131° F) during operation. Avoid contact by persons and materials. Allow the fixture to cool for at least 10 minutes before handling.

Keep flammable materials well away from the fixture. Keep all combustible materials (e.g. fabric, wood, paper) at least 10 cm (4 in.) away from the fixture.

Ensure that there is free and unobstructed airflow around the fixture.

Do not illuminate surfaces within 20 cm (8 in.) of the fixture.

Do not attempt to bypass thermostatic switches or fuses.

Do not modify the fixture in any way not described in this manual or install other than genuine Martin® parts. Do not stick filters, masks or other materials onto any lens or other optical component. Use only accessories approved by Martin® to modify the light beam.

The fixture's optical components can focus the sun's rays, creating a risk of fire and damage. Do not expose the front of the fixture to sunlight or any other intense light source.

Protection from eye injury

Do not look directly into the product's light output.

Do not look at the light output with magnifiers, telescopes, binoculars or similar optical instruments that may concentrate the light output.

Ensure that persons are not looking directly into the front of the fixture when the product lights up suddenly. This can happen when power is applied, when the product receives a DMX signal, or when certain control menu items are selected.

Do not look at operating light source. Eye injury may result.

Disconnect the fixture from power at all times when the fixture is not in use.

Provide well-lit conditions to reduce the pupil diameter of anyone working on or near the fixture.

Wear protective glasses and other PPE (personal protective equipment) when working on or near the fixture.

Exterior Wash 200, 210 and 220 fixtures emit possibly hazardous optical radiation. The diagrams and safety instructions given below for each fixture type indicate the fixtures' Risk Group categories according to EN 62471 and IEC/TR 62778. The Risk Group distances indicated apply to the light output from one fixture only. If fixtures can be operated in combination, light intensity can increase and you should consult a lighting professional for more appropriate safety recommendations.

Exterior Wash 200

The Exterior Wash 200 is classed Risk Group 3 according to EN 62471 when all photobiological risks are considered and Risk Group 2 according to IEC/TR 62778 for blue light only. It falls into the Risk Group categories shown below according to both EN 62471 and IEC/TR 62778 under worst-case conditions:

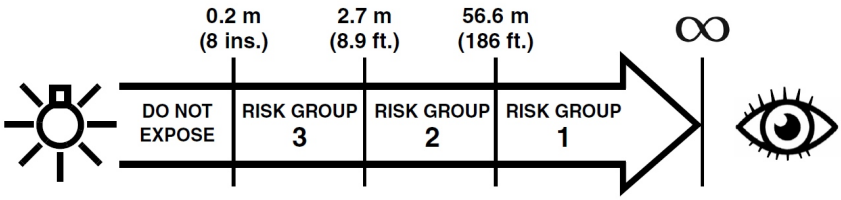

At a distance of less than 2.7 m (8.9 ft.) from the fixture, the light output can potentially cause eye or skin injury before an exposed person's natural aversion responses (blink reflex and reaction to skin discomfort) can protect them. At distances greater than 2.7 m (8.9 ft.), potential eye and skin injury hazards from the light output are normally prevented by natural aversion reflexes.

Position the Exterior Wash 200 so that persons cannot be exposed to the fixture's light output at less than 2.7 m (8.9 ft.) from the fixture and so that prolonged staring into the light output at less than 56.6 m (186 ft.) from the fixture is not expected.

Exterior Wash 210

The Exterior Wash 210 is classed Risk Group 3 according to EN 62471 when all photobiological risks are considered and Risk Group 1 according to IEC/TR 62778 for blue light only. It falls into the Risk Group categories shown below according to both EN 62471 and IEC/TR 62778 under worst-case conditions:

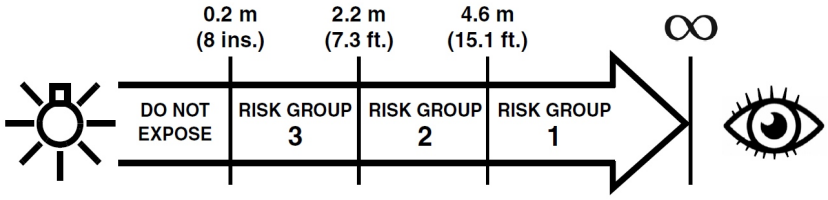

At a distance of less than 2.2 m (7.3 ft.) from the fixture, the light output can potentially cause eye or skin injury before an exposed person's natural aversion responses (blink reflex and reaction to skin discomfort) can protect them. At distances greater than 2.2 m (7.3 ft.), potential eye and skin injury hazards from the light output are normally prevented by natural aversion reflexes.

Position the Exterior Wash 210 so that persons cannot be exposed to the fixture's light output at less than 2.2 m (7.3 ft.) from the fixture and so that prolonged staring into the light output at less than 4.6 m (15.1 ft.) from the fixture is not expected.

Exterior Wash 220

The Exterior Wash 220 is classed Risk Group 3 according to EN 62471 when all photobiological risks are considered and Risk Group 2 according to IEC/TR 62778 for blue light only. It falls into the Risk Group categories shown below according to both EN 62471 and IEC/TR 62778 under worst-case conditions:

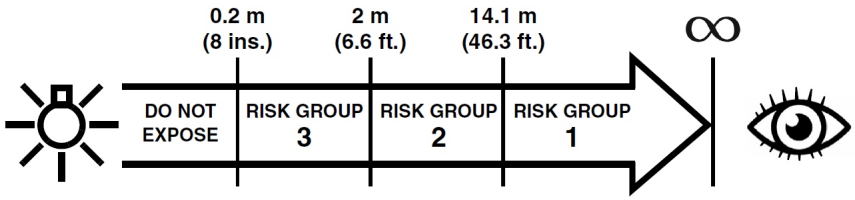

At a distance of less than 2 m (6.6 ft.) from the fixture, the light output can potentially cause eye or skin injury before an exposed person's natural aversion responses (blink reflex and reaction to skin discomfort) can protect them. At distances greater than 2 m (6.6 ft.), potential eye and skin injury hazards from the light output are normally prevented by natural aversion reflexes.

Position the Exterior Wash 220 so that persons cannot be exposed to the fixture's light output at less than 2 m (6.6 ft.) from the fixture and so that prolonged staring into the light output at less than 14.1 m (46.3 ft.) from the fixture is not expected.

Protection from injury

Fasten the fixture securely to a fixed surface or structure when in use. The fixture is not portable when installed.

Ensure that any supporting structure and/or hardware used can hold at least 10 times the weight of all the devices they support.

If suspending from a rigging structure, fasten the fixture to a rigging clamp. Do not use safety cables as the primary means of support. If the fixture is installed in a location where it may cause injury or damage if it falls, provide a secondary attachment such as a safety cable inserted through the secondary attachment point that will hold the fixture if a primary attachment fails. The secondary attachment must be approved by an official body such as TÜV as a safety attachment for the weight that it secures, must comply with EN 60598-2-17 Section 17.6.6 and must be capable of bearing a static suspended load that is ten times the weight of the fixture and all installed accessories.

The safety and suitability of lifting equipment, installation location, anchoring method, mounting hardware and electrical installation are the responsibility of the installer.

Block access below the work area and work from a stable platform whenever installing, setting, adjusting, or cleaning the fixture.

After installation or service, check that the fixture and any optical accessories such as a snoot or diffuser lens are securely fastened.

Do not operate the fixture with missing or damaged covers, shields or any optical component.

In the event of an operating problem, stop using the fixture immediately and disconnect it from power. Do not attempt to use a fixture that is obviously damaged.

Introduction

This user manual covers the following Exterior Wash 200 Series lighting fixtures from Martin®:

- Exterior Wash 200 with individual red, green, blue, and white LEDs optimized for long-throw applications,
- Exterior Wash 210 with premixed quad-color LEDs optimized for superior color mixing, and
- Exterior Wash 220 with mixable warm-white and cold-white LEDs that can achieve white tones ranging in color temperature from 2800 K to 6500 K.

The Exterior Wash 200 Series is a powerful, compact and energy-efficient line of LED lighting fixtures designed to illuminate mid-sized structures and building facades. All models have built-in displays for ease of use, a wide selection of beam angles, and sealed construction suited to permanent outdoor use. A discreet, optional snoot integrates seamlessly with the fixtures' sleek design to put the light right where you want it.

Each fixture is supplied with this user manual and an optional control panel cover plate to deter unauthorized access. They are prepared for hard wiring with 1.8 m (5.9 ft.) cables for power and data connection.

Fixture overview

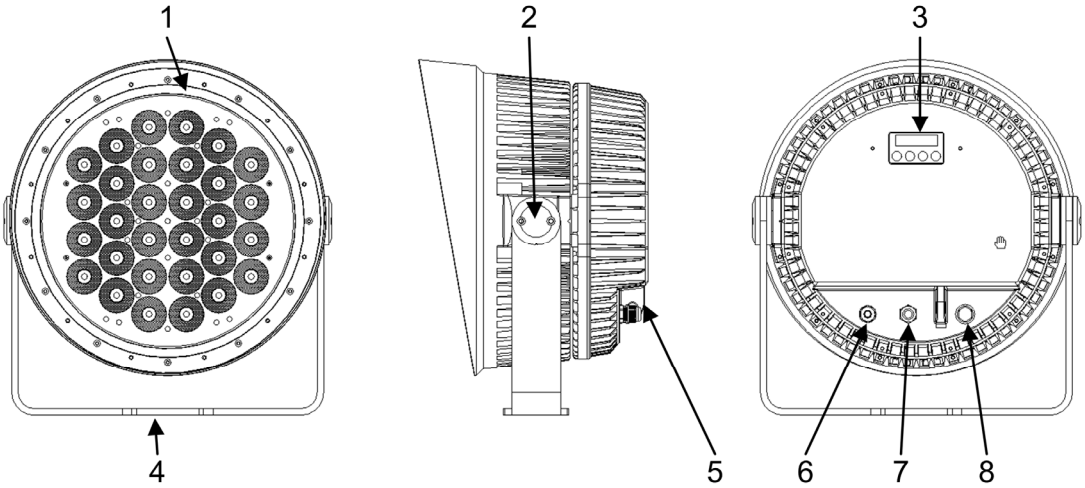

1 Front ring with recessed channel for optional diffuser lenses
2 Tilt lock (one on each side)
3 Control panel
4 Mounting bracket
5 Safety cable attachment point
6 DMX combined input/output cable
7 AC power cable
8 Pressure relief valve

Before using the product for the first time

1. Read 'Safety information' on page 5 before installing, operating or servicing the fixture.
2. Unpack and ensure that there is no transportation damage before using the fixture. Do not attempt to operate a damaged fixture.
3. If testing and/or setting up the fixture before it is hard-wired to a mains supply, install a local power plug (not supplied) to the end of the supplied power cable.
4. Before operating, ensure that the voltage and frequency of the power supply match the power requirements of the fixture.
5. Check the support pages on the Martin Professional website at www.martin.com for the most recent user documentation and technical information about the fixture. Martin® user manual revisions are identified by the revision letter at the bottom of the inside cover.

Physical installation

Warning! Read ‘Safety information’ on page 5 before installing the fixture.

Warning! The safety and suitability of lifting equipment, installation location, anchoring method, mounting hardware and electrical installation are the responsibility of the installer. All local safety regulations and legal requirements must be observed when installing and connecting the Exterior Wash 200 Series. Installation must be carried out by qualified professionals only.

Contact your Martin® supplier for assistance if you have any questions about how to install this product safely.

Fixture location

Exterior Wash 200 Series fixtures are intended for outdoor use. With an IP rating of 66, they are dust tight and able to withstand powerful water jets, but they are not submersible.

Observe the following limitations in selecting a location:

- Do not immerse the fixture in water or any other fluid.
- Do not install fixtures in a location where flooding may occur.
- Do not allow water to collect on or near the pressure relief valve. Do not install a fixture with the valve membrane horizontal so that water can pool on it.
- Ensure sufficient drainage to cope with the heaviest rainfall. Make sure that water can drain away from the installation area at least as fast as it can enter it.
- Fixtures require free and unobstructed airflow around them to ensure adequate cooling: do not bury or locate in an unventilated space. Allow at least 0.1 m (4 in.) free space around the fixture.
- Install the fixture at least 0.2 m (8 in.) away from the surface to be illuminated and at least 0.1 m (4 in.) away from any combustible materials (wood, paper, etc.). Keep it well away from any flammable materials.
- The fixture can become hot. Restrict public access or locate the fixture so that it cannot accidentally be touched.

Mounting the fixture

Warning! All fasteners used to mount Exterior Wash 200 Series fixtures must be corrosion resistant and strong enough to mount the fixture safely.

A washer must be installed directly under the head of each fastener when anchoring the yoke base to the installation surface.

The fixture and yoke can be mounted at any angle. The yoke allows the fixture to be manually panned and tilted for beam aiming adjustment.

The fixture and mounting bracket are manufactured in corrosion-resistant anodized aluminum. Avoid mounting the fixture in direct contact with other types of metal, as this can cause galvanic corrosion. When fastening to a dissimilar metal surface:

- Use an electrically insulating material (such as rubber or plastic) or coating between the mounting bracket and the other metal.
- Use a non-conductive coating such as Delta Seal on fasteners (screws, bolts, washers, etc.) where they come into contact with the mounting bracket.

The fixture’s mounting yoke base must be securely and safely anchored to a stable, static surface, pedestal, structural beam or other suitable support. Do not stand the fixture unanchored on a surface or leave it where it can be moved or fall over.

Mounting on a surface

To anchor the mounting yoke to a wall or other flat surface, use at least three high-strength corrosion-resistant fasteners that are safe for the application and the environment (recommended minimum properties: stainless steel A4-70 grade according to ISO 3506 or steel grade 8.8 according to ISO 898-1). Use self-locking nuts. Install washers under all nuts and bolt heads. Make sure that there is a washer between each fastener and the yoke base. Ensure that the surface and all fasteners used can support 10 times the weight of all the fixtures and equipment that they will support.

Referring to the illustration below, install a 12 mm (1/2 inch) shaft diameter bolt passing through the center hole **A**. Then install either two additional 12 mm bolts passing through holes **B** or two bolts with 8 mm (5/16 inch) shaft diameter passing through slots **C** to anchor the fixture. Installing bolts through slots **C** will give approximately 90° of pan adjustment. If additional bolts are required to mount the fixture safely, install them passing through slots **C** or holes **B**.

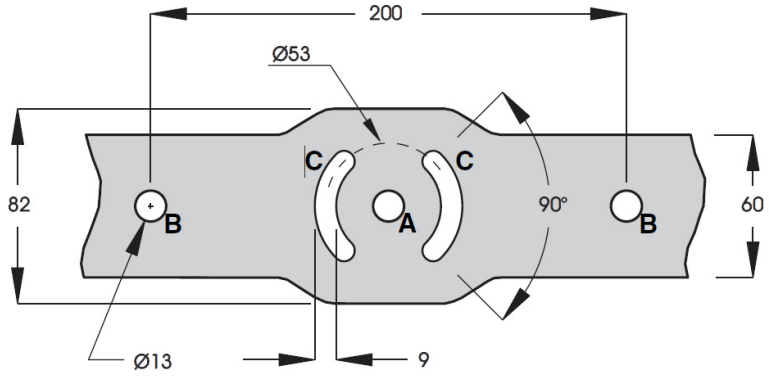

Figure 1. Mounting yoke base

Suspending from a truss

In temporary installations, you can suspend the fixture from a rigging truss by means of two rigging clamps that are approved for the weight they support securely fastened through holes **B** in the yoke base (see illustration above). The fixture must be installed hanging downwards only.

When using rigging clamps, secure the fixture with a safety cable (or other secondary attachment) that is approved for the weight of the fixture so that the safety cable will hold the fixture if a rigging clamp fails. Loop the safety cable through the safety cable attachment point on the back of the fixture (see ‘Fixture overview’ on page 9). Remove as much slack as possible from the safety cable (by looping it more than once around the truss chord, for example).

Check that the truss and all fasteners used can support 10 times the weight of all the fixtures and equipment that they will support.

Adjusting tilt

Warning! The fixture can become hot. Wear heat-resistant gloves if you adjust the aim of the fixture when it is (or has recently been) powered on.

Tilt adjustment can be carried out with the fixture powered on as follows:

1. Put on heat-resistant gloves.
2. See illustration on right. Loosen, but do not remove, the tilt lock screws (arrowed) on both sides.
3. Tilt the fixture to the desired angle and retighten the screws.

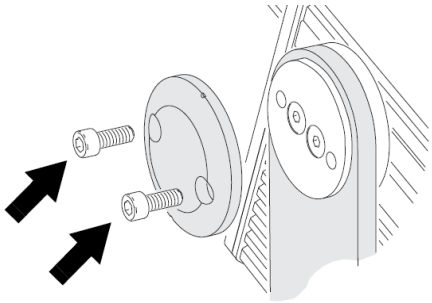

Figure 2. Tilt adjustment

Installing a diffuser

Optional diffuser lenses are available from Martin to modify the beam width (see table below and ‘Accessories’ on page 35 for details).

The diffuser is held in place either by the included trim ring or, if installed, by a snoot or honeycomb louver accessory.

Located close to the edge of the diffuser is a marking that gives the diffuser’s nominal beam angle and indicates which side of the diffuser must face outwards (see Figure 3). Note that the marking is partially hidden under the diffuser’s silicone gasket.

Note that the nominal diffuser beam angle is for reference only. The effective beam angle given in the table below is the beam (half-peak) angle that you will actually obtain, depending on which fixture you install the diffuser on.

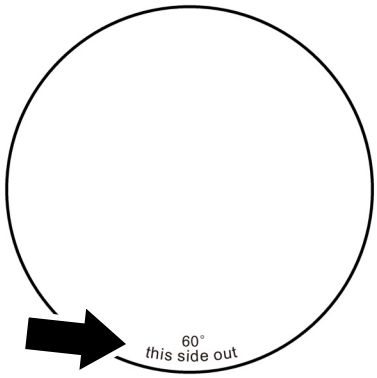

Figure 3. Diffuser marking

Diffuser kit	Part number	Nominal diffuser beam angle	Effective beam angle, 210 model	Effective beam angle, 200 & 220 models
None	-	-	10°	7°
Narrow	91610154	10°	14°	12°
Medium	91610153	20°	22°	21°
Wide	91610152	40°	41°	40°
Very Wide	91610151	60°	61°	60°
Asymmetric	91610150	10° x 60°	14° x 61°	12° x 60°

Exterior Wash 200 Series Diffuser Kits

To install an optional diffuser lens:

1. Shut down power to the fixture and allow it to cool.
2. See Figure 4. Position the diffuser **A** over the front of the fixture, making sure that the marking ‘**this side out**’ close to the edge of the diffuser faces outwards, towards the front of the fixture.
3. With the cut-out channels in the silicone gasket facing outwards, align the channels in the gasket with the drain channels at the bottom of the front ring.
4. Press the diffuser lens gasket firmly into the recess in the front ring.
5. Either place a trim ring **C** over the diffuser and fasten it securely with the supplied screws or install a honeycomb louver or snoot as described in the next sections.

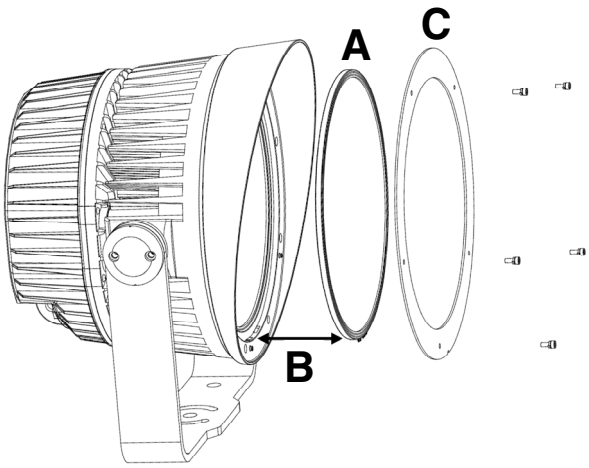

Figure 4. Diffuser installation

Installing a honeycomb louver

Honeycomb louver accessories that reduce lateral light spill and improve visual comfort are available from Martin in two versions: one for Exterior Wash 200 and 220 fixtures, and one for Exterior Wash 210 fixtures (see ‘Accessories’ on page 35).

If you install a louver over a diffuser lens, you do not need to use the trim ring shown at **C** in Figure 4 on page 12 because the louver will hold the diffuser securely.

Bear in mind that louvers gather dirt, so cleaning is particularly important for fixtures with louvers.

Louvers can be installed on the front of the fixture in two orientations. See illustrations below:

- If a diffuser lens is installed on the front of the fixture, install the louver with the profile facing outwards towards the target as shown at **A**.
- If no diffuser lens is installed on the front of the fixture, install the louver with the profile facing inwards towards the light source as shown at **B**.

To install a honeycomb louver:

1. Shut down power to the fixture and allow to cool.
2. If required, install a diffuser lens as described earlier in this chapter.
3. Line up the screw holes in the louver with the threaded holes in the front of the fixture, then fasten the louver securely onto the fixture with the supplied screws as shown below.

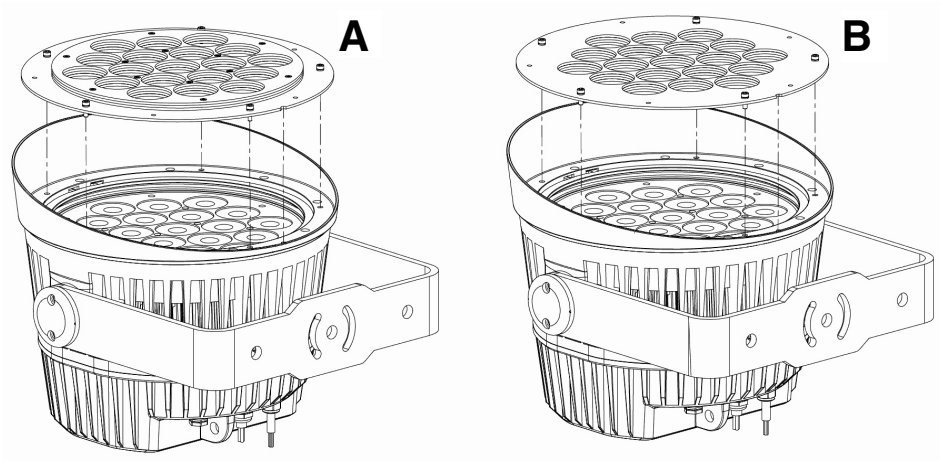

Figure 5. Honeycomb louver installation, Exterior Wash 200 and 220

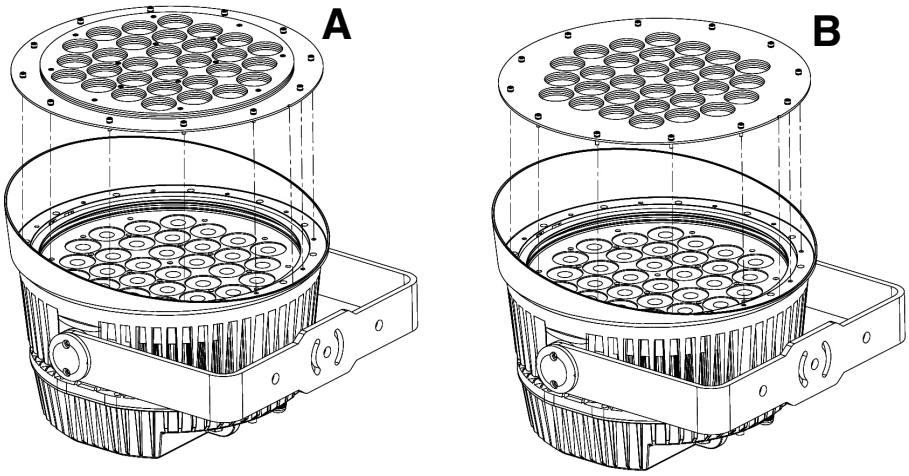

Figure 6. Honeycomb louver installation, Exterior Wash 210

Installing a snoot

The optional snoot for Exterior Wash 200 Series fixtures may be installed with or without a diffuser lens (see earlier in this chapter).

To install a snoot:

4. Shut down power to the fixture and allow it to cool.
5. If required, install a diffuser lens as described earlier in this chapter.
6. Note how the profile of the snoot fits into the front of the fixture (see arrows in illustration below). Line up the snoot correctly, making sure that screw holes in the snoot line up with threaded holes in the front of the fixture, then fasten the snoot securely onto the fixture with the supplied screws.

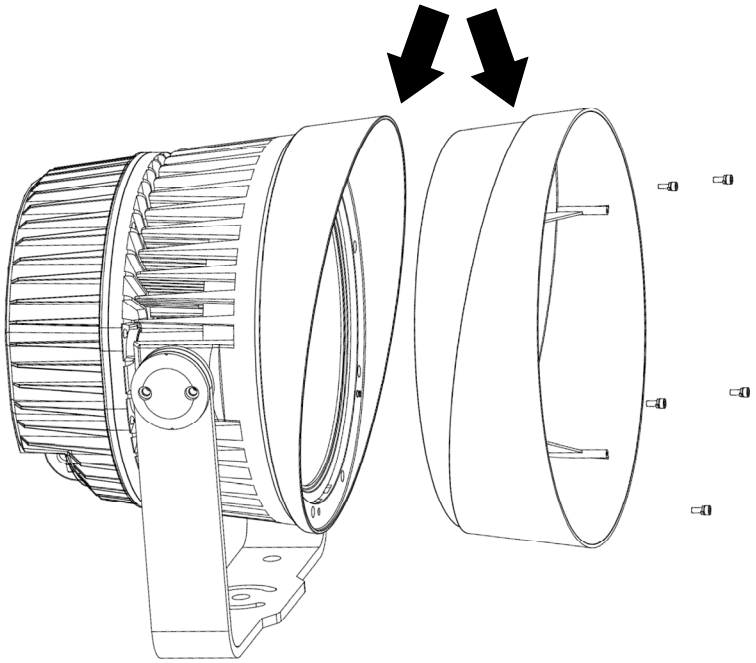

Figure 7. Snoot installation

Installing a snoot over a louver

The optional honeycomb louver and snoot can be installed together, with or without a diffuser lens. If you install the snoot over the louver, a small groove will be visible between the snoot and the fixture housing. The groove is normal – do not over-tighten the snoot screws trying to remove it.

AC power

Warning! Read “Safety Information” on page 5 before attempting to install an Exterior Wash 200 Series fixture. Lock out power to the entire installation before working on cables and connections.

Electrical installation must be carried out by qualified professionals only.

For protection from dangerous electric shock, the fixture must be grounded (earthed). The AC power distribution system must be fitted with current overload and ground-fault (earth-fault) circuit breakers as well as a means to isolate fixtures from power and lock out power during service.

The Exterior Wash 200 Series is supplied in EU and US models. Both models accept AC power at 100-240 V nominal or 277 V nominal at 50 or 60 Hz. Do not connect to power at any other voltage or frequency.

You can connect the Exterior Wash 200 Series to either of the following mains power distribution systems:

- Single-phase (live, neutral, ground/earth) system.
- Grounded/earthed three-phase four-wire (three phases, neutral, ground/earth) system. s

Do not try to connect to a three-phase three-wire (three phases, ground/earth) system.

There is no power on/off switch. Power is applied to an Exterior Wash 200 Series fixture as soon as it is connected to power. Provide a means to disconnect or shut down power to fixtures that is easily accessible and is located close to the fixtures.

Do not use an external dimming system to supply power to the fixture, as this may cause damage to the fixture that is not covered by the product warranty.

Protecting connections from moisture

Moisture can cause corrosion in unprotected cable connections. Moisture can also be sucked along the inside of cables at breaks or cuts in the cable jacket (for example at connection points) and into fixtures because of the vacuum effect of temperature fluctuations inside fixtures. To protect connections and fixtures from moisture, take at least one of the following precautions:

- Locate cable junctions in dry areas (e.g. junction boxes in dry locations).
- Use connectors or junction boxes that are protected to IP67 or higher.
- Fill junction boxes with potting compound to seal the ends of cables and to protect connections from corrosion.

Connecting to power

The fixture is supplied with a power cable installed ready for connection. See illustration below:

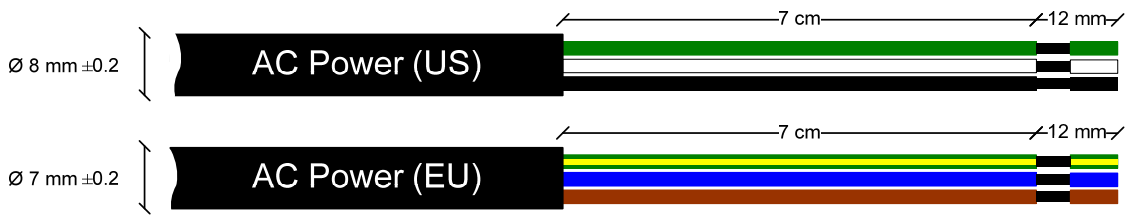

AC power cable details

To connect to a single-phase system or to one phase of a three-phase, four-wire system:

1. Lock out power to the installation.
2. Connect the conductors in the power cable to the distribution circuit as follows:
   - Connect the green wire (US models) or yellow/green wire (EU models) to ground (earth).
   - Connect the white wire (US models) or blue wire (EU models) to neutral.
   - Connect the black wire (US models) or brown wire (EU models) to live (one phase).

3. Check that all installation work is completed and carry out appropriate tests and safety checks before applying power.

Installing a temporary power plug

If you install a power plug on the power cable for temporary use, install a grounding type (earthed) plug with integral cable grip that is rated minimum 277 V, 6 A. Follow the plug manufacturer's instructions and connect the wires in the power cable as shown in the following table:

	Live or L	**Neutral or N**	**Earth, Ground or ⏚**
US system	Black	White	Green
EU system	Brown	Blue	Yellow/green

Power plug connections

Control data link

A DMX512 data link is required in order to control the fixture via DMX (and manage fixtures via RDM, if used). Your Martin® supplier will be happy to help if you need advice or assistance in planning the link.

Follow these guidelines when creating a DMX data link:

- 512 DMX channels are available in one DMX universe. If the total combined channel requirements of all connected fixtures exceed 512, one or more additional DMX universes will be required.
- Use RS-485 data cable designed for exterior use for the data link. RS-485 cable has low capacitance and a characteristic impedance of 85 to 150 Ohms. It is electrically shielded and has at least 1 twisted pair of conductors. The minimum recommended wire size is 0.25 mm2 (24 AWG) for runs up to 100 meters (1000 ft.) and 0.32 mm2 (22 AWG) for runs up 500 meters (1640 ft).
- Connect fixtures in one single daisy chain (i.e. one line without branches) up to a maximum of 32 fixtures.
- If you want to create branches in the DMX data link, you must use an opto-isolated splitter-amplifier. To preserve RDM functionality, use an RDM-compatible splitter-amplifier such as the Martin® 5.5 RDM Splitter. Each new branch may contain up to 32 fixtures.
- You can also use an RDM-compatible splitter-amplifier to extend a network beyond 500 meters (1640 ft.) or to connect up to 32 additional fixtures to the daisy chain.
- Terminate the end of the data link and the end of each branch by placing a 120 ohm resistor (available from Martin®, P/N 04150308) across the data output hot (+ve) and data output cold (-ve) conductors of the last fixture in the chain.
- Avoid creating long parallel runs of AC power and control data cables because these may cause interference on the data link. Even if not required by law, use separate conduits for power and data cables.
- The combined DMX data input/output cable tail supplied with Exterior Wash fixtures does not support the second pair of data conductors on the DMX link that is provided for by the DMX 512-A standard. If any devices in the installation use the second data pair, you cannot include them on the same DMX data link as Exterior Wash fixtures. Such devices will require a separate DMX data link that has conductors for the second data pair.

Connecting the data link

Important! Protect all connections and all breaks in cable jackets from moisture (see 'Protecting connections from moisture' on page 15).

The fixture has a 1.8 m (5.9 ft.) shielded cable with 2 pairs of wire for data connection. The pair of wires marked with a short length of red insulation is for data input. The other pair, marked with a short length of black insulation, is the output to the next device in the daisy chain.

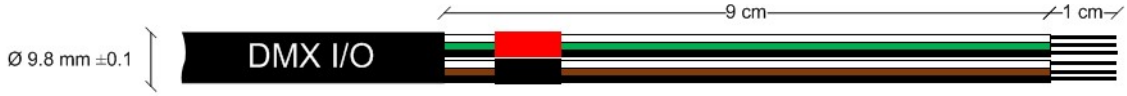

DMX cable details

You can connect the data cable using screw terminals or soldered joints in junction boxes or using XLR connectors that are suitable for the environment. Ensure that the fixture is protected from the entry of water via the data cable by using junction boxes or connectors that are protected to IP67 or higher. Fill junction boxes with potting compound.

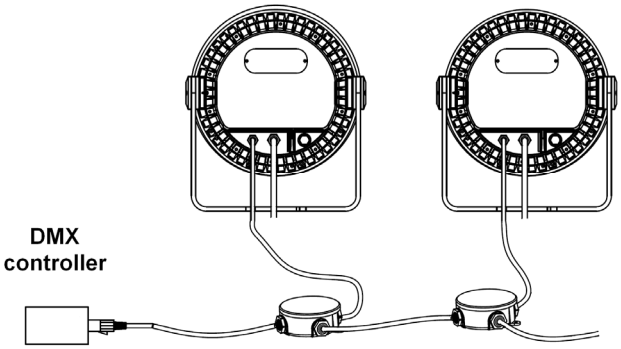

DMX data link layout

Connect the cable as shown in the table below. Do not connect the shield conductor to ground (earth) or allow it to come into contact with a connector shell, as this may cause interference.

Wires	**Input pair (red tube)**		**Output pair (black tube)**		**Shield**
Color	**white**	**green**	**white**	**brown**	**black**
Signal	DMX in +	DMX in -	DMX out +	DMX out -	common
Male XLR pin	pin 3	pin 2	-	-	pin 1
Female XLR pin	-	-	pin 3	pin 2	pin 1

Data connections

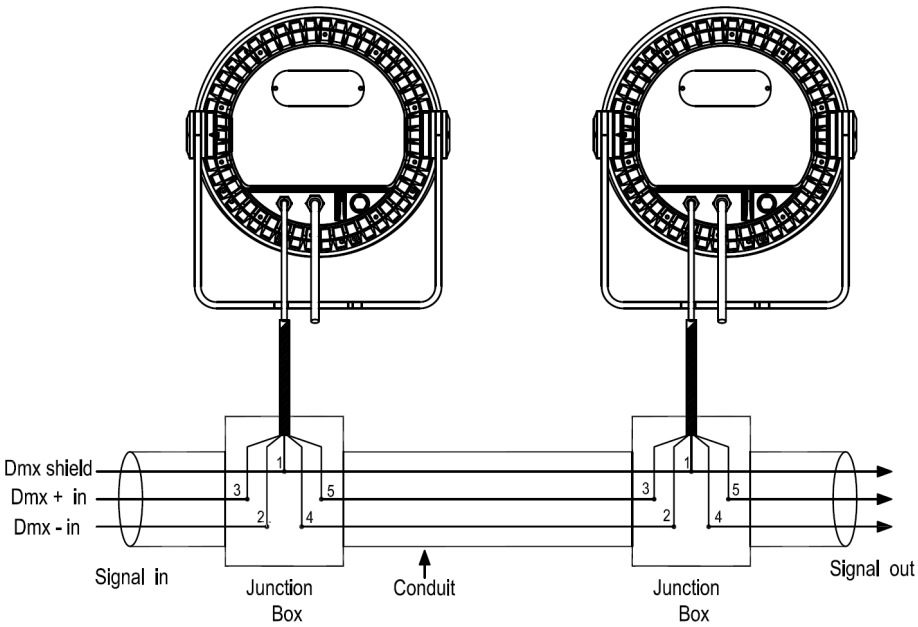

1 = DMX shield (black) *2 = DMX in – (green)* *4 = DMX out – (brown)*

3 = DMX in + (white) *5 = DMX out + (white)*

DMX link connections

Setup

Warning! Read ‘Safety information’ on page 5 before operating the fixture.

This section explains the fixture settings and utilities that the user has access to via the control panel. Settings are retained when the fixture is powered off. A full map of the control menu including default settings can be found on page 27. Some settings and functions are also available by RDM.

Accessing and navigating the control menus

The control panel is located on the back of the fixture. The display can be hidden to deter unauthorized access by the display cover plate, included. Use of the cover plate is optional and not required for weather protection.

To access the control menus, press and hold the MENU button. If prompted for a password, use the arrow buttons to scroll to the 3-digit password (123 by default) and press ENTER when the password is displayed. For more information about password protection of the control menu, see page 23.

Navigate the menu structure using the ENTER, DOWN ARROW (▼) and UP ARROW (▲) buttons. Press ENTER to select and save the desired menu option. To return to the previous level in the menu structure without making a change, press MENU.

To exit the menus, press and hold MENU.

DMX settings

DMX modes in the Exterior Wash 200 and 210

The Exterior Wash 200 and Exterior Wash 210 can be set to one of four DMX control modes:

RGBW - uncalibrated

Uncalibrated RGBW mode provides individual control of the red, green, blue, and white LEDs. Since fixtures are uncalibrated, slight differences in color and/or intensity between different fixtures may be visible in the light output from multiple fixtures, but you can obtain slightly higher light intensity levels.

Uncalibrated RGBW mode uses four DMX channels.

Fixtures are set to uncalibrated RGBW DMX mode by default.

DRGBW - uncalibrated

Uncalibrated DRGBW mode provides control of overall dimming plus individual control of the red, green, blue, and white LEDs. Since fixtures are uncalibrated, slight differences in color and/or intensity between different fixtures may be visible in the light output from multiple fixtures, but you can obtain slightly higher light intensity levels.

Uncalibrated DRGBW mode uses five DMX channels.

RGB - calibrated

Calibrated RGB mode provides individual control of the red, green and blue LEDs. The fixture automatically adjusts white LED output depending on the intensity levels selected for the other LEDs. Since fixtures are calibrated, color and intensity will be even across different fixtures, but light intensity levels will be slightly lower than in uncalibrated modes.

Calibrated RGB mode uses three DMX channels.

DRGB - calibrated

Calibrated DRGB mode provides control of overall dimming plus individual control of the red, green and blue LEDs. The fixture automatically adjusts white LED output depending on the intensity levels selected for the other LEDs. Since fixtures are calibrated, color and intensity will be even across different fixtures, but light intensity levels will be slightly lower than in uncalibrated modes.

Calibrated DRGB mode uses four DMX channels.

Selecting DMX mode in the Exterior Wash 200 and 210

You can set the DMX control mode in the Exterior Wash 200 and 210 using the control panel or via RDM.

To set the DMX mode using the control panel:

1. Press and hold the MENU button to access the control menu. If prompted for a password, press the arrow buttons to scroll to the 3-digit password (123 by default). Press ENTER when the password is displayed.
2. Use the UP and DOWN buttons to select FIXTURE CONFIG from the menu. Press ENTER.
3. Select DMX MODE and press ENTER.
4. The fixture's DMX mode setting is displayed. To change the mode setting, press the UP or DOWN button.
5. Press ENTER to store the DMX mode setting.
6. Press MENU to exit.

DMX channels in the Exterior Wash 220

The Exterior Wash 220 has one DMX control mode that uses three DMX channels, giving individual control of warm white LEDs, individual control of cool white LEDs, or overall control of color temperature.

DMX address

The Exterior Wash 200 and Exterior Wash 210 use three, four or five DMX channels, depending on the DMX control mode selected. The Exterior Wash 220 uses three DMX channels.

The DMX address, also known as the start channel, is the first channel used to receive instructions from a DMX controller. If a fixture that requires four DMX channels has its DMX address set to 1, for example, then it uses channels 1, 2, 3 and 4. The next fixture can have its DMX address set to 5, the next to 9 and so on until the 512 channels in one DMX universe are allocated.

For independent control, each fixture must be assigned its own control channels. Two fixtures of the same type (and set to the same DMX control mode) may share the same address and control channels if identical behavior is desired.

The DMX address may be set from the control panel or by RDM. To set the fixture's DMX address from the control panel:

1. Press and hold the MENU button to access the control menu. If prompted for a password, press the arrow buttons to scroll to the 3-digit user password (123 by default). Press ENTER when the password is displayed.
2. Use the UP and DOWN buttons to select DMX ADDRESS from the menu. Press ENTER.
3. The fixture's DMX address setting is displayed. Press the UP or DOWN button to scroll to the desired DMX address.
4. Press ENTER to store the DMX address setting.
5. Press MENU to exit.

Programming a standalone show

You can program a standalone routine, or show, to run without a controller or if DMX control is suddenly lost. The show can have up to 20 separate effects, or scenes, that display for up to 10 minutes each. Scenes can be programmed to fade from one scene to the next over a period of 0 to 120 seconds.

Note: To enable standalone operation, the DMX STATE setting in the FIXTURE CONFIG menu must be set to SHOW MODE. See page 23. The show will run only when there is no DMX input.

To program a standalone show:

1. Access the control menu and select PROGRAM SHOW. Press ENTER.
2. Set the number of scenes. Select SET SCENE TOTALS and press ENTER. Use the arrow buttons to select from 1 to 20 scenes. Press ENTER.
3. To modify scene colors (on 200 and 210 models) or color temperatures (on the 220 model):
   a) Select EDIT SCENE COLOR and press ENTER.
   b) Scroll to a scene to modify and press ENTER.
   c) Select the attribute to change (red / green / blue / white, or warm white / cold white) and press ENTER.
   d) Press the UP arrow to increase the attribute or the DOWN arrow to decrease it. When satisfied with the amount, press ENTER.

e) Repeat steps c) and d) for each attribute.

f) Press MENU to select the next scene to modify.

g) When done editing scenes, press MENU again to return to the PROGRAM SHOW menu.

4. To modify scene transitions, select FADE TIME and press ENTER. Press UP or DOWN to select a fade time from 0 to 120 seconds. Press ENTER.

5. To modify the length of time each scene is displayed before fading to the next scene, select HOLD TIME and press ENTER. Press UP or DOWN to select a duration from 0 to 600 seconds. Press ENTER.

Manual mode

Fixture output can be set manually from the control panel as follows:

1. Access the control menu and select MANUAL MODE. Press ENTER.
2. Select an attribute to modify and press ENTER.
3. Adjust the attribute level from 0 to 255 with the arrow buttons. Press ENTER.
4. Repeat for each attribute.
5. To exit manual mode, press MENU.

Display setting

The DISPLAY SETTING menu provides options to invert, dim, and turn off the control panel display.

Display inverse

For easier reading when the fixture is mounted upside down, flip the display as follows:

1. Access the control menu and select DISPLAY SETTINGS. Press ENTER.
2. Select DISPLAY INVERSE and press ENTER.
3. Select YES to invert the display or NO for normal reading.
4. Press ENTER.

Display auto turn off

The display can be set to stay on or to turn off 1 minute after the last key press. To set display behavior:

1. Access the control menu and select DISPLAY SETTINGS. Press ENTER.
2. Select DISPLAY AUTO TURN OFF and press ENTER.
3. Select NO to keep the display illuminated, or YES to have the display turn off automatically after 1 minute.
4. Press ENTER.

Automatic test

The test function allows you to verify LED performance quickly from the control panel. All LEDS are first set to 100 percent. LEDs are then tested together by color (200 & 210 models), or color temperature (220 model). Finally, each LED is tested individually.

To run the automatic test from the control panel, access the control menu, select AUTOMATIC TEST and press ENTER. Press MENU to end the test.

Fixture status

LED temperature, hours, and software version are available from the FIXTURE STATUS menu or RDM.

Fixture config

The FIXTURE CONFIG menu contains additional settings for customizing behavior.

Host/client

Host/client operation – important guidelines

Fixtures operating in standalone mode can be synchronized in host/client operation if they are all connected to each other on a DMX data link as described under ‘Control data link’ on page 17 and if they have the same type of LEDs. In other words, Exterior Wash 100, 200 and 300 fixtures can be synchronized with each other in host/client operation, Exterior Wash 110, 210 and 310 fixtures can be synchronized with each other and Exterior Wash 120, 220 and 320 fixtures can be synchronized with each other.

In host/client operation, one fixture running a standalone show – the ’host’ fixture –sends ‘fade’ and ’wait’ signals to the other fixtures running standalone shows – the ’client’ fixtures – so that scene change times in client fixtures are synchronized with the scene change times in the host. Every time the host changes to its next pre-programmed scene, the client fixtures change to their next pre-programmed scene at the same time.

Note the following:

- Although scene changes in host and client fixtures all occur at the same time, scenes do not have to be identical. You can program different effects in the standalone scenes of different fixtures.
- Each fixture displays its own pre-programmed standalone show until it reaches its last scene, then it starts the show sequence again and continues in a loop. If all fixtures have the same number of scenes in their shows, they will all start shows in synch. If the standalone shows in different fixtures have different numbers of scenes, the fixtures will restart their shows at different times relative to each other.
- If no controller is connected to the first fixture on the link, you can improve the quality of the data signal sent to client fixtures by inserting a DMX termination plug (a plug with a 120 Ohm resistor across data hot and data cold) in the data IN connector of the first fixture.
- DMX and RDM signals will override standalone operation in both the host and the client fixtures. This means that standalone operation is only possible if no DMX signal is present.
- If you want host/client operation, set only the first fixture on the link to HOST. Set all the other fixtures to CLIENT. If you set more than one fixture to act as host in host/client operation, fixtures may behave unexpectedly.
- You should set *only one* fixture to HOST when you set up host/client operation, but note that if you want fixtures to keep obeying the last DMX command they received or to switch to their own independent standalone show if they stop receiving a DMX signal, you must set *all* fixtures to be HOST. Fixtures set to CLIENT will always black out when they are not receiving a DMX signal or a signal from a HOST fixture.

Setting up host/client operation

To operate fixtures in host/client mode, the fixtures must be connected as described under ‘Control data link’ on page 17. The host fixture must be programmed to run a standalone routine as described under ‘Programming a standalone show’ on page 20 .

Enable host/client operation as follows:

1. On each fixture, access the control menu and select FIXTURE CONFIG. Press ENTER.
2. Select DMX STATE and press ENTER.
3. Select SHOW MODE and press ENTER.
4. Select HOST/CLIENT from FIXTURE CONFIG menu and press ENTER.
5. The default setting is CLIENT. On one fixture only, select HOST and press ENTER. Press MENU to exit.
6. On all other fixtures, select HOST/CLIENT and confirm that they are set to CLIENT. Press MENU to exit.
7. Check that no DMX control signal is present.

DMX mode

See ‘DMX settings’ on page 19.

Dimmer curve

Four dimming options are available:

- OPTICALLY LINEAR: dimming appears linear as DMX values change.
- SQUARE LAW: dimming is finer at low levels and coarser at high levels.
- INVERSE SQUARE LAW: dimming is coarser at low levels and finer at high levels.
- S-CURVE: dimming is finer at high and low levels, and coarser at medium levels.

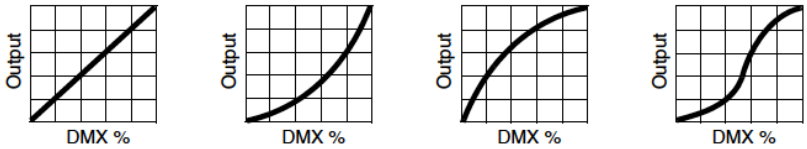

Optically linear **Square law** **Inverse square law** **S-curve**

To set the fixture's dimmer curve:

1. Access the control menu and select FIXTURE CONFIG. Press ENTER.
2. Select DIMMER CURVE and press ENTER.
3. Select the option desired from the list above and press ENTER.

Effects speed

You can change the speed at which the fixture changes from one effect to the next. This lets you optimize effect changes for either smoothness or speed.

To set the speed of effect changes:

1. Access the control menu and select FIXTURE CONFIG. Press ENTER.
2. Select EFFECT SPEED and press ENTER.
3. Select SLOW to obtain the smoothest changes or FAST to obtain the fastest changes.
4. Press ENTER.

White balance

White balance can be modified on 200 and 210 models by adjusting the amount of each color that is added to the mix to make white.

1. Access the control menu and select FIXTURE CONFIG. Press ENTER.
2. Select WHITE BALANCE and press ENTER.
3. Select a color to adjust and press ENTER.
4. Press UP or DOWN to increase or decrease the amount of that color in the white balance mix. Press ENTER.
5. Repeat steps 3 and 4 for the other two colors.

DMX State – behavior when no DMX or Host signal is received

There are three options for setting how a fixture behaves when it is offline, i.e. when it is not receiving a control signal from either a DMX controller or a host fixture:

SHOW MODE: Fixture executes its standalone show (fixture must be set to HOST).

If the fixture is set to HOST and it does not receive a control signal, the fixture will execute the scenes in its pre-programmed standalone show (see 'Programming a standalone show' on page 20). It will also send a signal to any fixtures that are connected to it and set to CLIENT instructing them to run their standalone shows.

If the fixture is set to CLIENT and it does not receive a control signal, it will black out until it receives a control signal.

HOLD LAST LOOK: Fixture holds and displays the last received DMX command (fixture must be set to HOST).

If the fixture is set to HOST and it does not receive a control signal, it will continue to obey the last DMX command that it received.

If the fixture is set to CLIENT and it does not receive a control signal, it will black out until it receives a control signal.

BLACK OUT (default): Fixture blacks out.

If the fixture is set to HOST and it does not receive a control signal, it will black out until it receives a control signal.

If the fixture is set to CLIENT, it will always black out if it does not receive a control signal.

These options also apply if a fixture is receiving a control signal but that signal is suddenly lost.

To set a fixture's offline behavior:

1. Access the control menu and scroll to FIXTURE CONFIG. Press ENTER.

2. Scroll to HOST/CLIENT and press ENTER. Press UP or DOWN to select host or client operation as explained above and press ENTER to confirm. Press MENU to go back up one level.
3. Scroll to DMX STATE and press ENTER. Press UP or DOWN to select SHOW MODE, HOLD LAST LOOK or BLACK OUT as explained above and press ENTER to confirm.

Display lock

If you want to reduce the risk of unauthorized access to the control menus, you can set the fixture to require a user password before the control panel becomes operative. Password protection is disabled by default. You can enable or disable password protection as follows:

1. Access the control menu and select FIXTURE CONFIG. Press ENTER.
2. Select DISPLAY LOCK and press ENTER.
3. Select YES to enable password protection or NO to disable it. Press ENTER.

Control menu passwords

The factory default user password is 123. The service password is 111. The user password can be reset to any value from 0 to 999 as described below. The service password cannot be reset. To change the user password:

1. Press and hold the MENU button to access the control menu.
2. If prompted for a password, press the arrow buttons to scroll to the current 3-digit password or the service password (111). Press ENTER when the password is displayed.
3. Select FIXTURE CONFIG from the main menu and press ENTER.
4. Select LOCK PASSWORD and press ENTER.
5. Press the UP or DOWN arrow button to scroll to the desired password. Press ENTER to save it.
6. Record your password inside the front cover of this manual.

Factory reset

To reset all user settings to factory defaults:

1. Access the control menu and select FIXTURE CONFIG. Press ENTER.
2. Select FACTORY RESET and press ENTER.
3. Select YES and press ENTER to confirm, or MENU to escape.

Setup via RDM

The Exterior Wash 200 Series is compatible with RDM (Remote Device Management). Using an RDM-compliant DMX controller, you can communicate with Exterior Wash 200 Series fixtures to set DMX addresses, execute other commands, and retrieve basic fixture data via the data link.

Before you can communicate with fixtures, you will need to send a Scan or Discovery command from your RDM controller to detect the devices on the data link. Once communication is established, many RDM controllers will show a list of the features available in the fixtures connected to them.

Maintenance

Warning! There are no user-serviceable parts inside. Do not open the housing. Refer any service operation not described in this manual to Martin Professional or its authorized service agents.

Installation, on-site service and maintenance can be provided worldwide by the Martin Professional Global Service organization and its approved agents, giving owners access to Martin's expertise and product knowledge in a partnership that will ensure the highest level of performance throughout the product's lifetime. Please contact your Martin® supplier for details.

Never try to repair the fixture by yourself as this may result in damage or malfunction and it may potentially void your product warranty. The only service operation the user can carry out on Exterior Wash 200 Series fixtures is occasional cleaning.

The LED light source in Exterior Wash 200 Series fixtures is not user-replaceable. It must be replaced by Martin Global Service or its approved agents only.

Be aware that the output of LEDs, like all light sources, changes gradually over many thousands of hours of use. If you require products to perform to very precise color specifications, you may eventually need to make small readjustments at the lighting controller.

Cleaning

Regular cleaning is essential for fixture life and performance. Buildup of dust and dirt degrades the fixture's light output and cooling ability.

Cleaning schedules will vary greatly depending on the operating environment. It is therefore impossible to specify precise cleaning intervals for the Exterior Wash 200 Series. Inspect fixtures within their first few weeks of operation to see whether cleaning is necessary. Check again at frequent intervals. This procedure will allow you to assess cleaning requirements in your particular situation. If in doubt, consult your Martin® dealer about a suitable maintenance schedule.

Do not use products that contain solvents, abrasives or caustic agents for cleaning, as they can cause surface damage to the fixture. The aluminum housing and front glass can be cleaned with mild detergents such as those for washing cars.

To clean the housing and front glass:

1. Isolate the fixture from AC power and allow the fixture to cool for 20 minutes.
2. Visually check that the silicone seals and the power and data cables are in good condition. If any seal or cable shows signs of damage, cracking or loss of water resistance, stop cleaning the fixture and contact a Martin authorized service technician for replacement.
3. If seals are in good condition, rinse off loose dirt with a hose or low-pressure water spray.
4. Wash the aluminum housing and front glass using warm water with a little mild detergent and a soft brush or sponge. Do not use abrasive cleaners.
5. Rinse with clean water and wipe dry.

Pressure relief valve

A valve with a Gore-Tex membrane on the back of the fixture equalizes pressure by allowing air to pass through it when the fixture heats up and cools down, but at the same time it acts as a barrier to water in liquid form. The expulsion of warm air (with a slightly higher water vapor content) and intake of cool air (with a slightly lower water vapor content) prevents humidity buildup over time, provided that the valve works correctly and the fixture is correctly sealed.

Pressure relief valves have a limited service life. They become blocked over time as the micropores in the membrane fill with particles. When a valve becomes blocked, excess pressure can damage seals or cause air and even water to be sucked into the fixture along cables. A blocked valve cannot be cleaned and must be replaced if it shows any signs of contamination or is not in perfect condition.

For maximum fixture service life, have the pressure relief valve replaced after an extended period of use. Intervals for valve replacement depend on the installation environment. Please consult your Martin® dealer about a suitable replacement schedule. If valve replacement becomes necessary, contact Martin® Service for assistance.

Software maintenance

Firmware (fixture software) can be uploaded to one fixture or multiple fixtures of the same type using a Martin Companion Cable hardware interface (see ‘Related Items’ on page 35) and a Windows PC running the Martin Companion software application available for download free of charge from www.martin.com.

To carry out a firmware upload:

1. Download the latest version of the Martin Companion application from www.martin.com and install it on a Windows PC.
2. Connect a Martin Companion Cable hardware interface to a USB port on the PC.
3. Connect the Martin Companion Cable to the DMX data link using an XLR connector or screw terminals (see ‘Connecting the data link’ on page 17) for wire colors and pinouts).
4. Launch the Martin Companion application and wait for it to synchronize its firmware database with the cloud to make sure that the latest firmware is available on your PC for upload to your fixtures. You can check synchronization status in the **File Management** tab.
5. In the **Firmware** -> **Fixture Update** pane, select the fixture type that you want to upload to and select the firmware version that you want to upload.
6. Check that the fixtures that require a firmware update are powered on and connected to the DMX link.
7. Click on **Update Firmware** and allow the Martin Companion application to perform the upload.

DMX protocol

Exterior Wash 200 and Exterior Wash 210

Exterior Wash 200 and 210 fixtures have four DMX control modes. See ‘DMX settings’ on page 19 for full details.

RGBW uncalibrated mode

RGBW uncalibrated mode provides individual intensity control of each color. Output is not calibrated. Fixtures are set to this mode by default.

Channel	Value	Function
1	0-255	Red: 0-100%
2	0-255	Green: 0-100%
3	0-255	Blue: 0-100%
4	0-255	White: 0-100%

DRGBW uncalibrated mode

DRGBW uncalibrated mode provides individual intensity control of each color plus the ability to control overall intensity level on DMX channel 1. Output is not calibrated.

Channel	Value	Function
1	0-255	Dimmer 0-100%
2	0-255	Red: 0-100%
3	0-255	Green: 0-100%
4	0-255	Blue: 0-100%
5	0-255	White: 0-100%

RGB calibrated mode

RGB calibrated mode provides individual intensity control of RGB LEDs. White LED intensity is adjusted automatically. Output is calibrated.

Channel	Value	Function
1	0-255	Red: 0-100%
2	0-255	Green: 0-100%
3	0-255	Blue: 0-100%

DRGB calibrated mode

DRGB calibrated mode provides individual intensity control of each color plus the ability to control overall intensity level on DMX channel 1. White LED intensity is adjusted automatically. Output is calibrated.

Channel	Value	Function
1	0-255	Dimmer 0-100%
2	0-255	Red: 0-100%
3	0-255	Green: 0-100%
4	0-255	Blue: 0-100%

Exterior Wash 220

The Exterior Wash 220's DMX protocol provides individual 0 to 100% control of the warm and cold LEDs on channels 1 and 2. Channel 3 provides color temperature control from warm to cold at maximum output. When set to a level above 26, channel 3 overrides channels 1 and 2.

Channel	Value	Function
1	0-255	Warm White 0-100%
2	0-255	Cold White 0-100%
3	0-27	Disabled
	28-65	Color Temperature from 2800 to 6500 K in approx. 100K steps (Cold and Warm LED channels are disabled)
	66-225	6500 K

Control menus

To access the control menus, press and hold the MENU button. If prompted, scroll to the user password and press ENTER. Press ▼ (down) and ▲ (up) buttons to navigate the menus. Press ENTER to select a menu option. For more information, see ‘Accessing and navigating the control menus’ on page 19.

The factory default settings are shown in bold.

Menu	Sub-menus				Explanation	
DMX Address	**1**- 512				DMX start channel	
Program Show	Set Scene Totals	**1**-20			Number of stand-alone scenes	
	Edit Scene Color (200 & 210 models)	**1**- last scene	Red	**0**-255	Individual scene color	
			Green	**0**-255		
			Blue	**0**-255		
			White	**0**-255		
	Edit Scene Color (220 model)	**1**- last scene	Cold white	**0**-255	Individual scene color temperature	
			Warm white	**0**-255		
	Fade Time	0-120 secs. (**3 secs.**)			Transition time between scenes	
	Hold Time	0-600 secs. (**1 sec.**)			Length of time scenes are displayed	
Manual Mode (200 & 210)	Red	0-**255**			Manually adjust output	
	Green	0-**255**				
	Blue	0-**255**				
	White	0-**255**				
Manual Mode (220)	Warm White	0-**255**			Manually adjust output	
	Cold White	0-**255**				
Display Setting	Display Inverse	**No**/Yes			Flip display	
	Display Auto Turn Off	No/**Yes**			Switch off display 1 min. after last key press	
Automatic Test	-				Lights LEDs together, by color, and individually	
Fixture Status	LED Temperature				Temperature of onboard sensor	
	Power On Hours				Fixture operating hours counter	
	LED On Hours				LED hours counter	
	RDM device UID				Fixture’s unique RDM ID	
	Software Version				Currently installed firmware version	
Fixture Config	Host/Client	Host			Set to host fixture	
		Client			Set to client fixture	
	DMX Mode (Exterior Wash 200 and 210)	**RGBW - uncalibrated**			DMX control options (see page 19)	
		DRGBW - uncalibrated				
		RGB - calibrated				
		DRGB - calibrated				
	Dimmer Curve	**Optically Linear**			Dimming behavior (see page 22)	
		Square Law				
		Inverse Square Law				
		S-Curve				
	Effects speed	Fast			Optimize effects for speed	
		Slow			Optimize effects for smoothness	
	White Balance (Exterior Wash 200 and 210)	Red (90% - **100**%)			Amount of each color used to make white	
		Green (90% - **100**%)				
		Blue (90% - **100**%)				

Fixture Config (contd.)	DMX State	Show Mode	Behavior when no DMX control signal present
		Hold Last Look	
		Black Out	
	Display Lock	**No**/Yes	Password protect control menu
	Lock Password	0 – 999 (**123**)	Set user password
	Factory Reset	**No**/Yes	Restore all settings to factory defaults

Troubleshooting

Problem	Probable cause(s)	Remedy
Fixture is completely dead.	No power to fixture.	Check power source and connections.
	Primary fuse blown.	Isolate fixture from power. Contact Martin® Service for assistance.
One or more fixtures responds incorrectly to control or does not respond at all.	Incorrect DMX addressing.	Check number of DMX channels required by each fixture and check DMX addresses on fixtures and DMX controller.
	Incorrect channel mode.	Verify CHANNEL MODE setting.
	Fault on DMX link.	Inspect connections and cables. Correct poor connections. Repair or replace damaged cables.
	Electromagnetic interference on DMX link	Move cables away from any strong electromagnetic fields.
	Fixture defective.	Have faulty fixture serviced by Martin® Service.
	Other device on DMX link defective.	Bypass devices on DMX link until the faulty device has been identified. Have faulty device serviced by Martin® Service or device supplier.
LEDs cut out intermittently.	Fixture is too hot.	Ensure free airflow around fixture.
		Clean fixture.
		Check that ambient temperature does not exceed maximum permitted level.
		Contact Martin® Service for assistance.

Specifications

Physical

Length .....270 mm (10.7 in.)
Width .....334 mm (13.2 in.)
Height .....382 mm (15.1 in.)
Weight ..... 13.0 kg (28.7 lbs.)

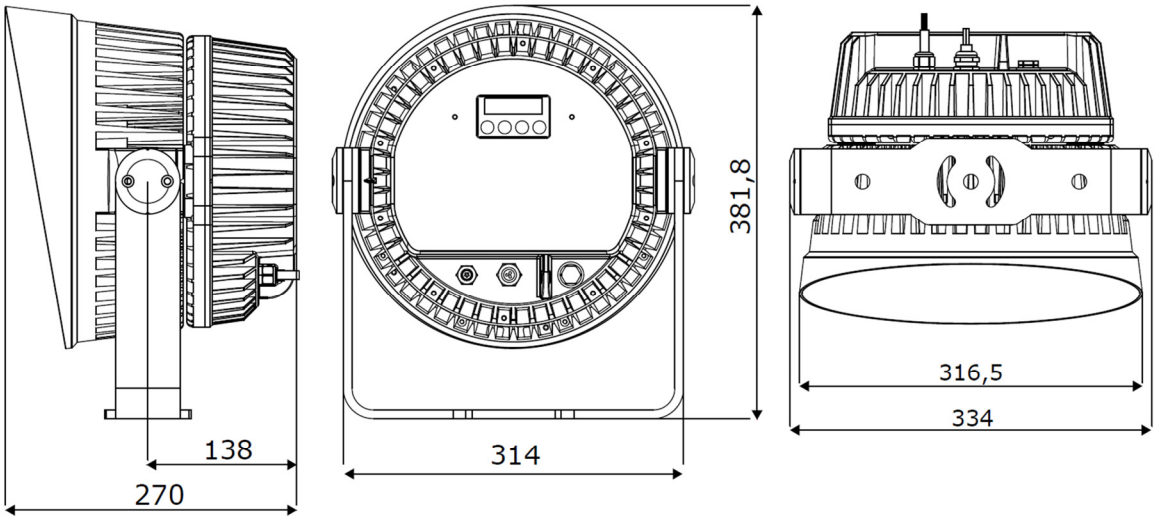

Dynamic Effects

All models

Intensity..... 0 - 100%

Exterior Wash 200 and 210

Color mixing ..... RGBW

Exterior Wash 220

Color temperature control .....2800 K - 6500 K

Control and Programming

All models

Control systems .....DMX, RDM
Setting, addressing, standalone programming..... Control panel with OLED display
Receiver RS-485
Firmware update .....Serial upload via DMX link
DMX compliance .....USITT DMX512-A
RDM compliance .....ANSI/ESTA E1.20

Exterior Wash 200 and 210

DMX channels .....3, 4 or 5 depending on DMX mode

Exterior Wash 220

DMX channels 3

Optics

All models

Minimum LED lifetime .....50 000 hours (to >70% luminous output)*
*Figure obtained under manufacturer's test conditions

Exterior Wash 200

Light source ..... 68 single-color LEDs (16 R, 18 G, 16 B, 18 W)
Beam angle options (half-peak):
- No diffuser ..... 7°
- Narrow diffuser ..... 12°
- Medium diffuser ..... 21°
- Wide diffuser ..... 40°
- Very wide diffuser ..... 60°
- Asymmetric diffuser ..... 60° x 12°

Exterior Wash 210

Light source ..... 19 quad-color RGBW LEDs
Beam angle options (half-peak):
- No diffuser ..... 10°
- Narrow diffuser ..... 14°
- Medium diffuser ..... 22°
- Wide diffuser ..... 41°
- Very wide diffuser ..... 61°
- Asymmetric diffuser ..... 61° x 14°

Exterior Wash 220

Light source ..... 34 x 2800 K warm white and 34 x 6500 K cold white LEDs
Beam angle options (half-peak):
- No diffuser ..... 7°
- Narrow diffuser ..... 12°
- Medium diffuser ..... 21°
- Wide diffuser ..... 40°
- Very wide diffuser ..... 60°
- Asymmetric diffuser ..... 60° x 12°

Photometric Data

All models

CRI ..... >70
CCT (white LEDs) ..... 6500 K

Exterior Wash 200

Total luminous output ..... 6500 lumens

Exterior Wash 210

Total luminous output ..... 4900 lumens

Exterior Wash 220

Total luminous output ..... 9300 lumens

Construction

Protection rating IP66
Color ..... Clear anodized (standard), black or white (optional)
Housing ..... Cast aluminum
Effective Projected Area (EPA) ..... 0.1 m² (1.1 ft²)
Impact resistance IK08
Impact resistance ..... IK08 (with display panel cover plate installed)
Corrosion resistance ..... C5-M (very high corrosivity / marine ISO 12944)
Vibration resistance ..... 1.0 G sinusoidal (IEC 60068-2-6), 0.7 G random (IEC 60068-2-64)
RoHS ..... Compliant

Installation

Orientation ..... Any
Mounting ..... Adjustable yoke
Minimum distance to illuminated surfaces ..... 0.2 m (0.6 ft.)

Connections

Power input ..... 1.8 m (5.9 ft.) open-ended cable tail
Power input cable type, EU models ..... H05RN-F, 300/500 V, 3 x 0.75 mm^2, Ø 7 mm
Power input cable type, US models ..... SJOW, 300 V, 18 AWG, WL F1, Ø 8 mm
Data I/O ..... 1.8 m (5.9 ft.) open-ended 5-conductor cable tail
All cable entries ..... IP68 cable gland

Electrical

AC power ..... 100-240/277 V nominal, 50/60 Hz
Power supply unit ..... Integrated, auto-sensing multi-voltage
Maximum total power consumption, Exterior Wash 200 and 220 ..... 185 W
Maximum total power consumption, Exterior Wash 210 ..... 165 W
Typical power consumption, steady state, all LEDs at zero intensity ..... 3 W
Typical half-cycle RMS inrush current at 240 V, 50 Hz ..... 10.3 A

Typical power and current

Exterior Wash 200

100 V, 60 Hz ..... 1.6 A, 160 W, PF 0.99
120 V, 60 Hz ..... 1.4 A, 160 W, PF 0.99
230 V, 50 Hz ..... 0.8 A, 160 W, PF 0.94
277 V, 60 Hz ..... 0.7 A, 160 W, PF 0.89

Exterior Wash 210

100 V, 60 Hz ..... 1.5 A, 148 W, PF 0.99
120 V, 60 Hz ..... 1.3 A, 146 W, PF 0.99
230 V, 50 Hz ..... 0.7 A, 146 W, PF 0.95
277 V, 60 Hz ..... 0.6 A, 146 W, PF 0.88

Exterior Wash 220

100 V, 60 Hz ..... 1.6 A, 162 W, PF 0.99
120 V, 60 Hz ..... 1.4 A, 160 W, PF 0.99
230 V, 50 Hz ..... 0.8 A, 160 W, PF 0.94
277 V, 60 Hz ..... 0.7 A, 160 W, PF 0.93

Measurements made with fixture in steady state at nominal voltage, ambient temperature (Ta) 20° C (68° F), all LEDs at full intensity. Allow for a deviation of +/- 10%.

Thermal

Cooling ..... Convection
Maximum ambient temperature (Ta max.) ..... 45° C (113° F)
Minimum ambient temperature (Ta min.)* ..... -30° C (-22° F)
Maximum surface temperature, steady state, at 45° C ambient ..... 55° C (131° F)
Total heat dissipation (calculated, +/- 10%) ..... 640 BTU/hr.

**To ensure correct low temperature start-up, power must be maintained below -20° C (-4° F)*

Approvals

Global CB Certification/IECEE ..... IEC 60598-2-5 (IEC 60598-1)
EU safety EN60598-2-5 (EN60598-1), EN62471, EN62493, EN60598-2-1
EU EMC ..... EN55015, EN61547, EN61000-3-2 & 3-3, EN61000-4-2, EN6100-4-4 & 4-5
US safety ..... ANSI/UL 1598
US EMC ..... CFR Title 47 Part15 Class A
Canadian safety ..... CSA C.22.2 No. 250
Australia/NZ ..... RCM

Included Items

User manual
Control panel cover plate

Accessories

Exterior Wash 200 Series, Narrow Diffuser Kit ..... P/N 91610154
Exterior Wash 200 Series, Medium Diffuser Kit ..... P/N 91610153
Exterior Wash 200 Series, Wide Diffuser Kit ..... P/N 91610152
Exterior Wash 200 Series, Very Wide Diffuser Kit ..... P/N 91610151
Exterior Wash 200 Series, Asymmetric Diffuser Kit ..... P/N 91610150
Exterior Wash 200 Series, Glare Shield / Snoot ..... P/N 91611745
Honeycomb Louver for Exterior Wash 200 and 220 ..... P/N 91611857
Honeycomb Louver for Exterior Wash 210 ..... P/N 91611844

Related Items

Martin Companion software suite incl. software uploader ..... Free download from www.martin.com
Martin Companion Cable USB/DMX Interface ..... P/N 91616091
Martin RDM 5.5 Splitter ..... P/N 90758150

Ordering Information

Exterior Wash 200, 7°, EU, Aluminum ..... P/N 90509087
Exterior Wash 200, 7°, US, Aluminum ..... P/N 90509090
Exterior Wash 210, 10°, EU, Aluminum ..... P/N 90509088
Exterior Wash 210, 10°, US, Aluminum ..... P/N 90509095
Exterior Wash 220, 7°, EU, Aluminum ..... P/N 90509089
Exterior Wash 220, 7°, US, Aluminum ..... P/N 90509091

Specifications subject to change without notice. For latest product specifications, see www.martin.com

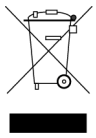	**Disposing of this product** Martin® products are supplied in compliance with Directive 2012/19/EC of the European Parliament and of the Council of the European Union on WEEE (Waste Electrical and Electronic Equipment), where applicable. Help preserve the environment! Ensure that this product is recycled at the end of its life. Your supplier can give details of local arrangements for the disposal of Martin® products

FCC compliance

This equipment has been tested and found to comply with the limits for a Class A digital device, pursuant to part 15 of the FCC Rules. These limits are designed to provide reasonable protection against harmful interference when the equipment is operated in a commercial environment. This equipment generates, uses, and can radiate radio frequency energy and, if not installed and used in accordance with the instruction manual, may cause harmful interference to radio communications. Operation of this equipment in a residential area is likely to cause harmful interference in which case the user will be required to correct the interference at his own expense.

Martin® by HARMAN

www.martin.com