ERA 700 Performance IP

User Manual

with Safety and Installation Manual

Martin® by HARMAN

©2023 HARMAN PROFESSIONAL DENMARK ApS. All rights reserved. Features, specifications and appearance are subject to change without notice. HARMAN PROFESSIONAL DENMARK ApS and all affiliated companies disclaim liability for any injury, damage, direct or indirect loss, consequential or economic loss or any other loss occasioned by the use of, inability to use or reliance on the information contained in this document. Martin is a registered trademark of HARMAN PROFESSIONAL DENMARK ApS registered in the United States and/or other countries.

HARMAN PROFESSIONAL DENMARK ApS, Olof Palmes Allé 44, 8200 Aarhus N, Denmark
HARMAN PROFESSIONAL SOLUTIONS U.S., 8500 Balboa Blvd., Northridge CA 91329, USA

www.martin.com

ERA 700 Performance IP User Manual with Safety and Installation Manual, English, Revision C, P/N 1000378123

Table of contents

Introduction 5
- Features 5
- Before using the product for the first time 5

Connecting to data 6
- Data via DMX cable 6
- Data via Ethernet cable 7

Effects 8
- Rotating gobos 9
- Non-rotating gobos 10
- Animation wheel 11
- Light and heavy frost 11
- Prisms 11
- Iris 11
- Zoom 11
- Framing 11
- Pan and Tilt 12

Fixture setup using the control panel 13
- Using the control menus 13
- Display sleep 14
- Disabling the control panel 14
- DMX mode setting 14
- DMX address setting 14
- Network settings 15
- Pan/tilt inversion 15
- Pan/tilt speed 15
- Dimming curves 15
- Dimming speed and smoothness 16
- Blackout or Hold if DMX signal stops 16
- Scene capture 16
- Cooling mode 16
- Focus tracking 17
- Climate-related settings 17
- Display rotation 18
- Display intensity 18
- Temperature units 18
- Resetting to factory defaults 18
- Fixture test 18
- Fixture information 19
- DMX Live 20
- Resetting the fixture 20
- Manual control 20
- Disabling pan and tilt feedback 21
- Calibration settings 21

Control/Settings via DMX 23
- Parameter shortcuts 23
- Blacking out the display 23
- Hibernation mode 23
- Pan and tilt limits 23

Tungsten emulation....24
Calibrating effects via DMX....24
Using RDM....25
Martin Companion® and RDM....25
Fixture discovery....25
Supported parameters....25
Example: setting a DMX address....26
Fixture information....26
Status messages....26
Managing the fixture....26
RDM functions....27
Operating the fixture....30
Controlling via DMX....30
Control menus....31
DMX protocols....36
Basic DMX Mode....36
Extended DMX Mode....41
Control/Settings DMX channel....46

Introduction

Warning! Before installing, operating or servicing the ERA 700 Performance IP lighting fixture, read the latest version of the fixture's Safety and Installation Manual, paying particular attention to the Safety Precautions section. The Safety and Installation Manual is supplied with the fixture and included at the back of this user manual.

Important! Full specifications for ERA 700 Performance IP fixtures and accessories are available in the ERA 700 Performance IP area of the Martin® website at www.martin.com.

Thank you for selecting the ERA 700 Performance IP lighting fixture from Martin.

This User Guide is a supplement to the Safety and Installation Manual that is supplied with the fixture and attached to the back of this User Manual. This combined User Manual plus Safety and Installation Manual is available for download from the ERA 700 Performance IP area of the Martin website at www.martin.com. The User Manual contains information that is mainly of interest for lighting designers and operators, whereas the Safety and Installation Manual contains important information for all users, especially installers and technicians.

We recommend that you check the Martin website regularly for updated documentation. We publish revised versions each time we can improve the quality of the information we provide and each time we release new firmware with changes or new features. Each time we revise this guide we list any important changes on page 2 so that you can keep track of updates.

Features

All ERA 700 Performance IP fixtures feature:

- Long-life, high output LED engine
- DMX and network control
- RDM configuration and addressing
- IP66 ingress protection rating when the supplied anti-tamper box is installed (the fixture is suitable for permanent or temporary outdoor or indoor use for entertainment purposes)
- Integrated 100-240 V~, 50/60 Hz auto-ranging power supply.

Before using the product for the first time

1. Check the ERA 700 Performance IP area of the Martin website at www.martin.com for the most recent user documentation and technical information about the fixture. Martin user manual revisions are identified by the revision letter at the bottom of the inside cover. Read the latest revision of the ERA 700 Performance IP Safety and Installation Manual that is included at the end of the User Manual, paying particular attention to the 'Safety Precautions' section.
2. Unpack and ensure that there is no transportation damage before using the fixture. Do not attempt to operate a damaged fixture.
3. Before operating, ensure that the voltage and frequency of the power supply match the power requirements of the fixture.
4. If fixtures are exposed to a sudden temperature change, give them time to warm or cool to the ambient temperature before applying power. This will help avoid damage due to condensation.

Connecting to data

Warning! Before installing the ERA 700 Performance IP, read the latest version of the fixture's Safety and Installation Manual that is attached to the User Manual, paying particular attention to the 'Safety Precautions' section. Besides important safety information, the Safety and Installation Manual contains instructions for connecting to AC mains power.

When using the fixture outdoors or in any environment where water or humidity is present, use IP65-rated connectors and keep the anti-tamper box installed over the connections panel with the cable openings facing downwards.

If independent control of a fixture is required, it must have its own DMX channels. Fixtures that are required to behave identically can share the same DMX address and channels.

The number of fixtures that you can connect to DMX data in a daisy chain is limited by the number of DMX channels required by the fixtures. A maximum of 512 channels is available in one DMX universe. To add more fixtures or groups of fixtures when you no longer have enough DMX channels, add a DMX universe and another daisy-chained link.

The ERA 700 Performance IP has two pairs of connectors for control data In/Out:

- one pair of locking 5-pin XLR sockets that accept IP65-rated Neutrik TOP (or compatible) connectors, and
- one pair of etherCON sockets that accept IP65-rated Neutrik TOP (or compatible) Ethernet connectors.

All sockets are protected by rubber caps. Keep the rubber caps in place at all times on unused sockets.

Data via DMX cable

The ERA 700 Performance IP has 5-pin locking XLR sockets for DMX and RDM input and output via DMX cable. The pin-out on both sockets is:

• Pin 1 to shield

• Pin 2 to data 1 cold (-)

• Pin 3 to data 1 hot (+).

Pins 4 and 5 are not used by the fixture but are bridged between input and output sockets. These pins can therefore be used as a pass-through connection for an additional data signal if required.

Tips for reliable data transmission via DMX cable

- Use shielded twisted-pair high-quality DMX cable.
- 24 AWG cable is suitable for runs up to 300 meters (1000 ft). Heavier gauge cable and/or an amplifier is recommended for longer runs.
- Do not use microphone cable, as standard microphone cable does not have the correct impedance and cannot transmit control data reliably over long runs.
- To split the data link into branches, use an optically isolated splitter-amplifier. Use an RDM-compatible splitter-amplifier if using RDM.
- Do not overload the DMX data link. You can connect up to a maximum of 32 devices on a serial DMX link.
- Install a DMX termination plug at the end of the DMX link.

Connecting to data via DMX cable

To connect the fixture to DMX and/or RDM data carried over DMX cable:

1. Connect the DMX data output from the controller to the fixture's data input (male XLR) socket using good-quality DMX cable.
2. Run DMX cable from the fixture's data output (female XLR) socket to the data input of the next fixture and continue until the link is complete.

3. Terminate the data link by connecting a 120 Ohm, 0.25 Watt resistor between the data 1 hot (+) and cold (-) conductors at the end of the link. If the link is divided into branches using a DMX splitter, terminate each branch of the link.

Data via Ethernet cable

The ERA 700 Performance IP has etherCON data sockets that support DMX and RDM over Art-Net and sACN. Either socket can be used for input and the other socket used for throughput. The etherCON data sockets have a fail-safe bypass feature. This means that the fixture will relay a data signal from the socket used for input to the socket used for throughput even if power to the fixture is shut down or lost.

Tips for reliable data transmission via Ethernet cable

- Use shielded twisted-pair Ethernet cable of type S/UTP, SF/UTP, S/STP or SF/STP only. The cable must be rated Cat 5e or better.
- The cable shield must be electrically connected to connector housings, and the other devices on the data link must also support shielded connections.
- The ERA 700 Performance IP is compatible with 10/100 Mbit Ethernet only. Do not connect the fixture to a network port or device that is fixed to Gigabit Ethernet speed. If you need to integrate an ERA 700 Performance IP in a Gigabit Ethernet network, use a network switch to allow the link towards the fixture to operate at 100 Mbit/s Ethernet speed.
- To split the data link into branches, use a standard network switch that is able to operate at 100 Mbit/s towards the fixtures.
- Even though every fixture has a fail-safe bypass mechanism and minimal latency insertion, we recommend that you avoid connecting more than 50 devices in a single daisy-chain or branch.
- Unlike DMX cable, Ethernet cable does not require termination at the end of a daisy-chain of fixtures.

Connecting to data via Ethernet cable

To connect the fixture to Art-Net or sACN via Ethernet cable:

1. Connect the Ethernet cable to either of the fixture’s etherCON data sockets.
2. Run Ethernet cable from the fixture’s other etherCON data socket to a data socket on the next fixture.
3. Continue connecting data sockets as described above until the link is complete.

Effects

See the ‘DMX protocols’ section starting on page 36 for a full list of the DMX channels and values required to control the different effects.

Shutter

The electronic ‘shutter’ effect provides instant open and blackout, variable speed regular and random strobe.

Dimmer

Overall intensity can be adjusted 0-100% using smooth continuous electronic dimming with 16-bit control resolution.

CMY color mixing

The fixture features CMY color mixing with 16-bit resolution. Colors are obtained using continuously variable dichroic color flags.

You may find it advantageous to deploy the CRI filter on the color wheel (see below) in combination with CMY color mixing.

Color temperature

The CTO channel lets you progressively reduce the color temperature of the fixture’s white point from the default 6500 K to 2700 K by deploying a variable dichroic CTO filter.

Color wheel

See illustration on right. The fixture features a color wheel with seven dichroic color filters plus open. Besides continuous scrolling and stepped (full colors) scrolling, the color wheel also offers continuous scrolling with variable speed and direction and random colors.

You can use CMY color mixing in combination with the color wheel if you want to fine-tune a color.

You may find it advantageous to deploy the Spectral Enhancement filter in combination with CMY color mixing.

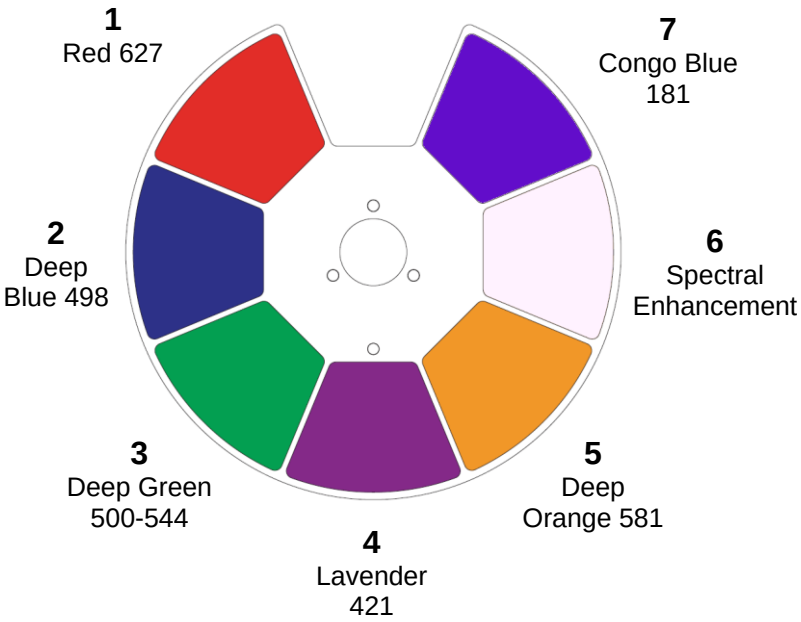

Rotating gobos

The rotating gobo wheel in the ERA 700 Performance IP has seven (7) rotating gobos that can be selected, indexed (positioned at an angle), rotated continuously, and shaken (bounced). The entire rotating gobo wheel can also be scrolled continuously or shaken.

Gobo selection and control type (indexing, continuous gobo rotation, gobo shake or continuous gobo wheel scrolling) are selected on channel 13 in both Basic and Extended DMX modes. Depending on what is selected on this channel, the gobo indexed angle or gobo rotation speed are set on channels 14 and 15 with 16-bit control.

The slots on the rotating gobo wheel are ordered as shown on the right. The fixture's standard gobos are shown in the correct order below.

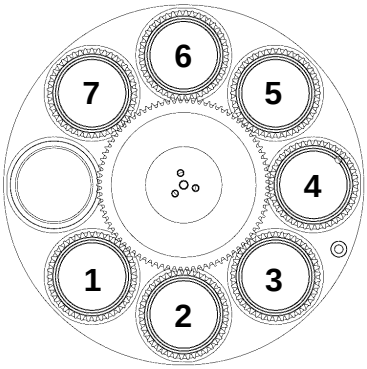

Rotating gobo wheel (seen from LED side)

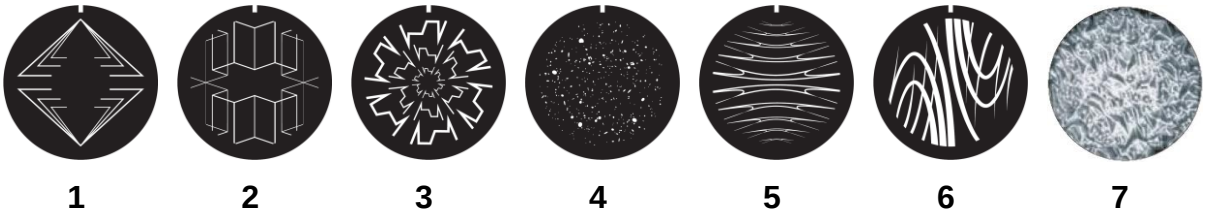

Slot	Gobo
1	Tri Array
2	Book Mirror
3	Ker Pow
4	Pandora's Cluster
5	Stretched Out
6	Point and Curve
7	Limbo (fused glass)

ERA 700 Performance IP rotating gobos

Non-rotating gobos

The fixture's static gobo wheel has eight (8) non-rotating gobos. The gobo wheel can be indexed in steps, which inserts full gobos only into the beam, it can be indexed continuously giving the possibility of split gobos, or it can be shaken with the shake centered on the gobo you select.

The slots on the static gobo wheel are ordered as shown on the right. The fixture's standard non-rotating gobos are shown in the correct order below.

Non-rotating gobo selection, gobo wheel continuous scrolling, gobo shake and random gobo selection are selected on channel 16 in both Basic and Extended DMX modes.

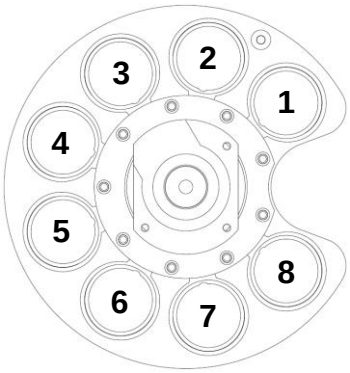

Static gobo wheel (seen from LED side)

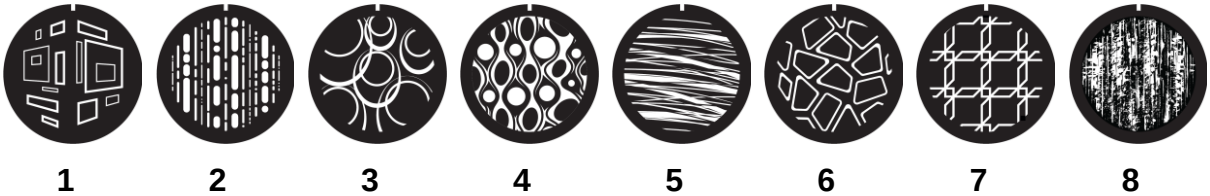

Slot	Gobo
1	Window Perspective
2	Dots and Dashes
3	Wurly Curly
4	Lava Shimmer
5	Wool Ball
6	Pave the Way
7	Square Perspective
8	Paint Play

ERA 700 Performance IP non-rotating gobos

Animation wheel

The ERA 700 Performance IP is supplied with the "Happy Daze" gobo animation wheel (P/N 5144517-00) installed. The wheel can be used to add animation effects to gobo projections. When using gobo animation, adjusting the fixture's focus will help obtain the most realistic results.

You can insert the animation wheel into the beam or select a gentle animation wheel shake (a gentle rocking movement) with variable speed on channel 17 in Basic and Extended DMX Modes. Once you have deployed the animation wheel on channel 17, you can select a static indexed angle, continuous animation wheel rotation or define the center angle for the animation wheel gentle shake with 8-bit resolution on channel 18 in Basic DMX Mode or with 16-bit resolution on channels 18 and 19 in Extended DMX Mode.

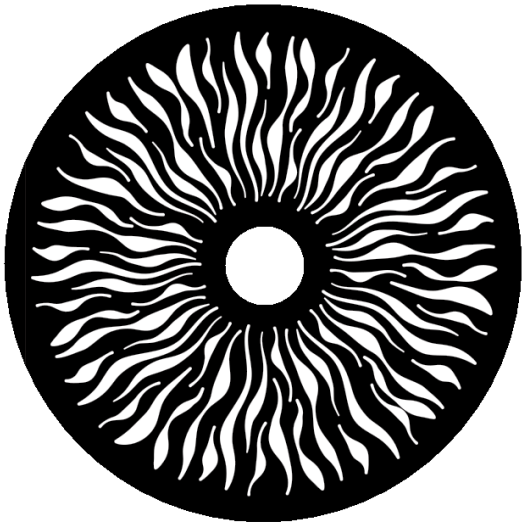

'Happy Daze' gobo animation wheel

Light and heavy frost

The ERA 700 Performance IP features two frost filters that are controllable via DMX: a light and a heavy filter. One or both filters can be inserted into the beam at any one time.

Prisms

The ERA 700 Performance IP features two prisms that are controllable via DMX: Prism 1 is a six-facet linear prism, and Prism 2 is a four-facet circular prism. You can insert one prism into the beam at any one time. Once you have selected a prism, you can shake it, set it to an indexed angle or set it to continuous rotation with variable direction and speed.

Iris

The fixture has a motorized iris that can be set to a static aperture to narrow the beam. You can also set the iris to a dynamic opening or closing pulse with variable speed.

Zoom

Zoom control via DMX lets you vary the beam angle within this range:

- **Wide**
  - Half-peak angle (50%): 41.1°
  - Field angle (10%): 44.2°
  - Cutoff angle (3%): 44.8°
- **Narrow**
  - Half-peak angle (50%): 5.4°
  - Field angle (10%): 7.1°
  - Cutoff angle (3%): 7.9°

Framing

The 4-blade framing module in the ERA 700 Performance IP can be rotated to an indexed position within a range of 120°. Independent control of angle and amount of insertion is available for each

framing blade. You can insert one or more blades into the beam projection and also form the beam into any shape with three or four flat sides.

Pan and Tilt

The ERA 700 Performance IP ’s head can pan through a range of 540° and tilt through 270° with 16-bit control resolution in both Basic and Extended DMX Modes.

Fixture setup using the control panel

This section explains how to adjust fixture settings using the menus available in the fixture's control panel. You can find details of additional functions that are not available in the control panel in the chapters on the Control/Settings DMX channel and on setup via RDM later in this user manual.

Any changes that you make to the fixture's settings are stored in memory when the fixture is powered off.

You can find a complete map of the control menu structure in 'Control menus' on page 31.

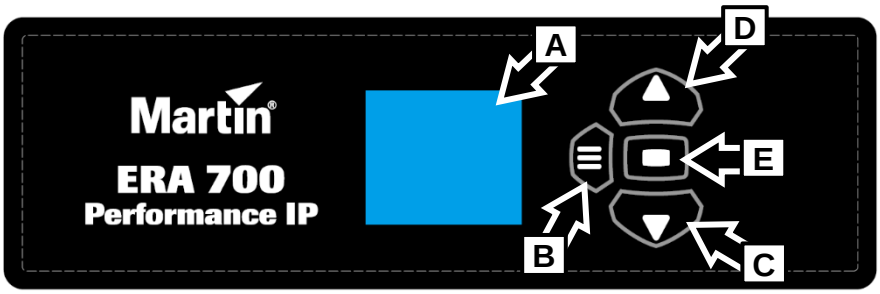

A – Control panel display

B – **Menu** button

C – **Down** button

D – **Up** button

E – **Enter** button

Using the control menus

The control panel buttons are touch-sensitive. The control panel flashes briefly to confirm when a keypress has been registered. The buttons have the following functions:

MENU	• Activate the control menus, or • open the Shortcuts menu by holding for 2 seconds, or • return to the previous level of the menu structure, or • press to exit the menus
DOWN	Scroll down a menu
UP	Scroll up a menu
ENTER	Confirm the selected function

Special keypress functions

- Pressing the UP and DOWN buttons together rotates the control panel display through 180°.
- Pressing the MENU and UP buttons together resets the entire fixture.
- Pressing and holding the MENU button for two seconds opens a Shortcuts menu (see next page).
- Holding the MENU button pressed while applying power puts the fixture into Service Mode. Pan and tilt are disabled in order to avoid head movement causing problems during service operations with the fixture powered on.

  Cycling power and allowing the fixture to start up normally takes it out of Service Mode.

Shortcuts menu

Pressing and holding the MENU button for two seconds opens a small Shortcuts menu with three items:

- RESET ALL carries out a complete reset of the fixture with all its effects.
- ROTATE DISPLAY rotates the control panel display through 180°. This function makes it easier to read the control panel menus when changing from standing to hanging installation.
- PERSONALITY VIEW displays a list of the fixture's personality settings. Use the DOWN and UP buttons to scroll through the list.

Display sleep

The control panel display blacks out automatically after two minutes with no key press. As soon as a button on the control panel is pressed, or if the fixture's self-diagnosis system detects an error, the display lights up again. If an error has been detected, the display will show a red exclamation mark **!** Pressing ENTER displays a short error message to identify the error.

Disabling the control panel

To avoid tampering or accidental triggering, it is possible to lock the control panel buttons using the PERSONALITY → DISPLAY → SCREEN LOCK menu. As soon as you set SCREEN LOCK to ON, the buttons on the control panel are disabled and the display shows the main menu.

To re-enable use of the control panel buttons and display temporarily, press the UP-DOWN-UP-DOWN-ENTER buttons in sequence. The control buttons and display will remain enabled until the display blacks out two minutes after the last keypress. At this point, the lock function will be reapplied and the control panel buttons will be disabled again.

To disable the lock function and return to normal use of the control panel, release the lock temporarily with the UP-DOWN-UP-DOWN-ENTER sequence, then open the PERSONALITY → DISPLAY → SCREEN LOCK menu and set it to OFF.

DMX mode setting

The ERA 700 Performance IP offers two DMX modes: Basic and Extended. See the 'DMX protocols' section at the end of this manual for details of the DMX control options available in the different modes and the number of DMX channels used.

Because the fixture's DMX mode affects the number of DMX channels used, it will also affect the assignment of DMX addresses to fixtures. It can therefore be a good idea to set the DMX mode of all the fixtures in the installation before you set their DMX addresses.

DMX address setting

The DMX address, also known as the start channel, is the first channel used to receive instructions from a DMX controller. If you have a group of fixtures and you set the first fixture's DMX address to 1, the fixture will use DMX channel 1 and the channels above it (the number of channels used will depend on the fixture's DMX mode). The channels above these are available for the next fixture.

For independent control, each fixture must be assigned its own control channels. You can give the same DMX address to two fixtures of the same type if you want them to behave identically. Giving the same DMX address to multiple fixtures can be useful for grouped control and troubleshooting.

To set the fixture's DMX address:

1. On the fixture's control panel, press MENU to activate the menus. In the DMX SETUP menu, select DMX ADDRESS and press ENTER. The fixture's currently set DMX address will blink in the display.
2. Use the UP and DOWN buttons to select a new address.
3. Once the new address has been selected, press ENTER to confirm it (or press MENU to exit without making a change).

Network settings

The PERSONALITY → NET ADDRESS menu lets you manually set the fixture's DMX universe, IP address and subnet mask.

PERSONALITY → NET SWITCH lets you set the fixture to automatically detect and respond to any compatible data signal protocol (sACN or Art-Net) received at one of its Ethernet ports. This function is enabled by default.

Pan/tilt inversion

The PERSONALITY → PAN INVERSE and TILT INVERSE menus let you reverse the direction of pan and tilt. This can be useful if you want to create symmetrical effects with multiple fixtures, or if you want to coordinate the movement of fixtures that are standing on the floor with fixtures that are being flown upside down in a rig.

To adjust the pan inversion settings:

1. Select PAN INVERSE and press ENTER to confirm. The currently set mode will blink in the display.
2. Use the DOWN and UP buttons to select YES (pan inversion) or NO (normal) mode.
3. Press ENTER to save your selection.

You can adjust the tilt inversion settings in the same way in the TILT INVERSE menu.

Pan/tilt speed

The PAN / TILT SPEED command lets you choose between two settings:

- FAST optimizes pan and tilt movement for speed. Slow pan and tilt movement may be less smooth.
- SMOOTH optimizes pan and tilt movement for smoothness. Slow pan and tilt movement will be smoother than at the FAST setting, but maximum pan and tilt movement speed will be reduced.

Dimming curves

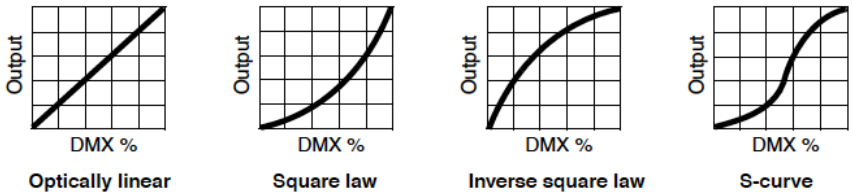

Four dimming curves are available:

- LINEAR – The increase in light intensity appears to be linear as DMX value is increased.
- SQUARE LAW – light intensity control is finer at low levels and coarser at high levels.
- INVERSE SQUARE LAW – light intensity control is coarser at low levels and finer at high levels.
- S-CURVE – light intensity control is finer at low levels and high levels and coarser at medium levels.

To set the fixture's dimming curve:

1. Select DIMMER CURVE and press ENTER. The currently set dimming curve mode will blink in the display.
2. Use the DOWN and UP buttons to select LINEAR, SQUARE LAW, INV SQ LAW, or S-CURVE.
3. Press ENTER to confirm your choice (or press MENU to exit without making a change).

Dimming speed and smoothness

You can optimize dimming to give either the fastest or the smoothest changes in dimming levels. To optimize dimming:

1. Select DIMMING SPEED and press ENTER.
2. Use the DOWN and UP buttons to select FAST (dimmer optimized for speed) or SLOW (dimmer optimized for smoothness).
3. Press ENTER to confirm your choice (or press MENU to exit without making a change).

Blackout or Hold if DMX signal stops

You can decide how the fixture should behave if you are controlling the fixture via DMX and then you stop sending the DMX data signal:

1. Select NO DATA MODE and press ENTER. The currently set mode will blink in the display.
2. Using the DOWN and UP buttons, select BLACKOUT or HOLD to decide how the fixture should respond if it stops receiving a DMX signal:
   - If you select BLACKOUT, the fixture will black out
   - If you select HOLD, the fixture will continue to show the effect that it is displaying at the time.
3. Press ENTER to confirm your choice (or press MENU to exit without making a change).

Scene capture

The SCENE CATCH menu lets you capture all the DMX values that the fixture is currently receiving and save them as a ‘standalone scene’ that you can choose to play back each time that fixture power is cycled off and on or each time that you carry out a reset.

Three scene capture controls are available:

- SCENE CATCH RECORD stores the currently displayed scene in the fixture’s memory. Once you have captured a scene, the fixture keeps that scene in memory even if you cycle power off and on again.
- SCENE CATCH → ON sets the fixture to show the scene that is stored in memory if the fixture is powered on but is not receiving a DMX signal.

  If the fixture receives a DMX control signal during scene playback, it will immediately stop showing its saved scene. If fixture power is cycled off and on again or if the fixture is reset, it will again show its saved scene.
- SCENE CATCH → OFF disables the scene playback function: the fixture does not show the scene that is stored in memory if it stops receiving a DMX signal.

  Setting SCENE CATCH to OFF does not delete the saved scene from memory: the scene will still be available if you set SCENE CATCH to ON again.

Cooling mode

The cooling mode setting lets you decide whether to give priority to lowest cooling fan noise or maximum light output:

1. Select COOLING MODE and press ENTER. The currently set cooling mode will blink in the display.
2. Using the DOWN and UP buttons, select one of the cooling options:
   - The REGULATED FANS setting adjusts cooling fan operation to balance the fixture’s noise and light output characteristics. Fans are set to the lowest speed possible and then increased as fixture operating temperature rises. If the fixture reaches maximum operating temperature and full-speed fan operation is not enough to control fixture temperature, light output intensity is limited to keep the fixture within its operating temperature range.

- At the FULL setting, the fans operate at constant full speed without temperature regulation. This setting maximizes cooling and gives priority to the highest possible light output intensity. FULL fan mode can also be used as a quick way of dislodging dirt from fans. The fixture reduces light output if full fan speed is not enough to keep the fixture within its operating temperature limits.
- At the MEDIUM setting, the fans operate at constant medium speed without temperature regulation. The fixture reduces light output if medium fan speed is not enough to keep the fixture within its operating temperature limits.
- At the LOW setting, the fans operate at constant low speed without temperature regulation. The fixture reduces light output if low fan speed is not enough to keep the fixture within its operating temperature limits.
- At the ULTRA LOW setting, the fans operate at constant very low speed without temperature regulation in order to give the lowest possible noise level. The fixture reduces light output if ultra-low fan speed is not enough to keep the fixture within its operating temperature limits.

3. Press ENTER to confirm your choice (or press MENU to exit without making a change).

Focus tracking

Focus tracking sets focus to automatically adjust to match the fixture's zoom angle. You can enable or disable focus tracking, and you can optimize this feature to give the sharpest focus at far, medium or near projection distances. Focus tracking is enabled and set to 'Medium distance' by default.

Regardless of whether focus tracking is enabled or disabled, you can always adjust focus via DMX.

Climate-related settings

The fixture offers the two functions described below to help it deal with outdoor climate conditions.

Standby heating

The fixture's bearings, other moving parts and lubricants may fail to operate correctly and may suffer damage if the fixture is used when they are too cold. The CLIMATE CONTROL → STANDBY HEATING function gives you options to protect the fixture and ensure good performance when the ambient temperature falls below freezing point.

- When set to ON (the default setting), the fixture maintains a constant low-level heating when the ambient temperature falls below freezing point. This means that the fixture can start up immediately after a period when it has not been in use and the temperature has been below freezing.
- When set to OFF, the fixture first goes into a warm-up sequence to warm up grease and bearings when it is powered on after a period when it has not been in use and the ambient temperature has been below freezing point. Mechanical effects are disabled until the fixture has warmed up to within its operating temperature range. The warm-up time required will typically be 20 minutes at -20° C (-4° F) and 40 minutes at -40° C (-40° F).

De-humidification

The fixture's DE-HUMIDIFY function reduces internal humidity, reducing the risk of condensation buildup inside the fixture. It is possible for a certain amount of condensation to be visible behind the front lens of an IP66-rated lighting fixture in certain environmental conditions, and this is not normally a problem. However, if condensation becomes visible we recommend that you run a forced de-humidifying sequence (see below) as soon as possible.

- When set to ON (the default setting), the fixture automatically detects excess humidity while it is operating and runs a de-humidifying sequence before normal operation is available. This feature can be useful when the fixture is placed in a humid environment with long standby periods.
- When set to OFF, automatic de-humidifying functionality is disabled.

You can run the de-humidifying sequence manually at any time using the SERVICE → FORCE DE-HUMDIFY command. Note that normal operation is paused during the de-humidifying sequence.

If the fixture's DE-HUMIDIFY function begins to run constantly, there is probably a leak that is allowing moisture to enter the fixture. Contact your Martin supplier for help.

Display rotation

To set the orientation of the control panel display:

1. Select DISPLAY → DISPLAY ROTATION and press ENTER.
2. Use the DOWN and UP buttons to select NORMAL (display in normal orientation) or ROTATE 180° (display inverted to make it easier to read if you install the fixture with the head hanging vertically downwards).
3. Press ENTER to confirm your choice (or press MENU to exit without making a change).

Display intensity

To set the brightness of the control panel display:

1. Select DISPLAY → DISPLAY INTENSITY and press ENTER.
2. Use the DOWN and UP buttons to adjust the brightness of the display from 10% to 100%.
3. Press ENTER to confirm your choice (or press MENU to exit without making a change).

Temperature units

To set the fixture to display temperatures in degrees Celsius or Fahrenheit:

1. Select DISPLAY → TEMPERATURE UNIT and press ENTER.
2. Use the DOWN and UP buttons to select °C or °F.
3. Press ENTER to confirm your choice (or press MENU to exit without making a change).

Resetting to factory defaults

To reset the fixture to its factory default settings:

1. In the DEFAULT SETTINGS menu, select FACTORY DEFAULT and press ENTER to confirm.
2. Use the DOWN and UP buttons to select YES to erase any custom settings that you have configured and reset the fixture to its factory default settings, or select NO.
3. Press ENTER to confirm your choice (or press MENU to exit without making a change).

Note that this does not affect the fixture's calibration settings.

Fixture test

You can run an automatic sequence to test all the fixture's effects or manually test individual effects using the control menus.

Automatic effects test

To perform a complete test of all of the fixture's effects:

1. Select FIXTURE TEST → TEST ALL and press ENTER to confirm. The automatic test will run.
2. To stop the test and return to the previous level of the menu structure, press MENU.

Manual effects tests

You can also manually test individual effects.

To test LED dimming:

1. Select FIXTURE TEST → TEST DIMMER and press ENTER.
2. To stop the test and return to the previous level of the menu structure, press MENU.

To test an individual effect:

1. Select FIXTURE TEST → TEST EFFECTS and press ENTER.

2. Use the DOWN and UP buttons to scroll through all the fixture's effects: CYAN, MAGENTA, YELLOW, CTO, COLOR (color wheel), GOBO1 (rotating gobos on gobo wheel 1), RGOBO1 (rotation of the rotating gobos on gobo wheel 1), GOBO2 (static gobos on gobo wheel 2), ANIMATION etc.
3. When you have reached the effect that you want to test, press ENTER to confirm your selection. The fixture will now run an automatic test of that effect.
4. Press MENU to exit the test and return to the list of effects.

To manually test pan and tilt:

1. Select FIXTURE TEST → TEST PAN/TILT and then either PAN or TILT.
2. Press ENTER. The fixture will now run an automatic test of pan or tilt functionality.
3. To stop the test and return to the previous level of the menu structure, press MENU.

Fixture information

Power on time

1. Select INFORMATION → POWER ON TIME and press ENTER to display the total number of hours the fixture has been powered on since it left the factory.
2. To return to the previous level of the menu structure, press MENU.

LED operating time

1. Select INFORMATION → LED HOURS and press ENTER to display the total number of hours the LEDs have been activated since the fixture left the factory.
2. To return to the previous level of the menu structure, press MENU.

Firmware version

To see which software version is installed in the fixture:

1. Select INFORMATION → SW VERSION and press ENTER. The display will indicate the currently installed firmware version.
2. Use the UP and DOWN buttons to scroll through firmware revisions.
3. To return to the previous level of the menu structure, press MENU.

Fixture ID number

You can set a custom 4-digit ID number for the fixture to help you identify it. To manage the ID number:

1. Select INFORMATION → FIXTURE ID and press ENTER. The display will indicate the current fixture ID number.
2. Use the DOWN and UP buttons to increase or decrease the current fixture ID number until you reach the ID number that you want to allocate to the fixture.
3. Press ENTER to confirm the new ID number (or press MENU to exit without making a change).

RDM unique ID number

You can view the fixture's unique non-resettable 12-digit RDM ID number. To view the RDM UID number:

1. Select INFORMATION → RDM UID and press ENTER. The display will indicate the fixture's unique RDM ID number.
2. Press MENU to exit.

Fixture temperature readouts

To check the onboard temperature of the fixture:

1. Select INFORMATION → TEMPERATURES and press ENTER. The fixture will display the current temperatures of all the fixture's PCBs.

2. To return to the previous level of the menu structure, press MENU.

Fixture type readout

To view the fixture's type:

1. Select INFORMATION → FIXTURE TYPE and press ENTER.
2. To return to the previous level of the menu structure, press MENU.

DMX Live

You can view the DMX values currently being received on each of the fixture's DMX channels. This can be useful for troubleshooting purposes.

To view the DMX values being received:

1. Select DMX LIVE and use the UP and DOWN buttons to scroll through the value being received on each channel.
2. To return to the previous level of the menu structure, press MENU.

Resetting the fixture

You can reset the entire fixture to return it to its state when you powered it on, or you can reset its effects only.

- To carry out a full reset, select MANUAL CONTROL → RESET → ALL, select YES or NO and press ENTER. The entire fixture will reset as if you had cycled power. The full reset process will take several seconds.
- To reset pan and tilt functionality only, you must first be prepared for the head to move through its full pan and tilt ranges. Select MANUAL CONTROL → RESET → PAN/TILT and press ENTER. The fixture will carry out a pan and tilt movement reset. The process will take several seconds.
- To reset only the fixture's effects, select MANUAL CONTROL → RESET → EFFECTS and press ENTER. All of the fixture's effects will reset. The effects reset process will take several seconds.

Manual control

You can control all the fixture's effects including pan and tilt manually without the need for a DMX signal.

To manually control the fixture:

1. Select MANUAL CONTROL and then use the UP and DOWN buttons to scroll to the effect that you want to control. Press ENTER.
2. Use the UP and DOWN buttons to scroll to the DMX value from 000 to 255 that you want to send to that effect. Press ENTER to confirm and send that value.
3. To return to the list of effects, press MENU.
4. If you want to manually control other effects together with the first effect, repeat steps 1. and 2. and 3. above for the other effects.

   The fixture will continue to show the effects that you have set manually until you set new manual control values for the effects.

   Exiting the MANUAL CONTROL menu by pressing the MENU button stops all the effects immediately.

   The effects are unaffected by a power OFF/ON cycle: if you power the fixture off and on again, it will resume showing the effects.

   When in manual control mode, pressing any button on the control panel lights up the control panel display and shows the message MANUAL CONTROL MODE.

Disabling pan and tilt feedback

The fixture features pan/tilt position feedback sensors to ensure accurate positioning of the head.

Pan/tilt feedback is enabled by default. If you experience unexpected positioning behavior, it can be useful to disable the feedback system by opening the SERVICE menu and selecting PAN/TILT FEEDBACK → OFF.

Calibration settings

Martin fixtures are adjusted and calibrated at the factory, and further calibration should only be necessary if fixtures have been subjected to abnormal shocks during transport or if normal wear and tear has affected alignment after an extended period of use. You can also use calibration to fine-tune fixtures for a particular location or application.

The SERVICE → CALIBRATION menu lets you define values in the fixture software to adjust the positions of pan, tilt and effects relative to the DMX values the fixture receives. Creating calibration offsets like this allows you to fine-tune fixtures and achieve uniform behavior in multiple fixtures.

You can calibrate focus on each individual gobo (a feature that can be especially useful if you use custom gobos). Calibrating focus at the open gobo position lets you adjust the fixture's beam between soft-edged and hard-edged when no gobo is being projected.

We recommend the following procedure to adjust the fixture's calibration settings:

1. Aim a reference fixture and the fixtures that you want to calibrate at a flat surface. You can calibrate fixtures one at a time or line up multiple fixtures in a row. Apply power and set pan, tilt and effects to the same DMX values.
2. In each fixture, scroll through the effects in the SERVICE → CALIBRATION menu and adjust the position of any effects that need calibration while comparing the light output with the reference fixture. The calibration range available varies depending on the effect.
3. After selecting a value, press ENTER to confirm. The fixture will remember any new calibration values that you have set, and the new positions will not be affected by powering the fixture off and on. To return to the list of effects, press MENU.

Loading factory default calibration values

The fixture keeps the original factory-set calibration values in memory. You can erase any custom calibration values that you have defined using the procedure outlined above and reload the default factory calibration values at any time by applying a SERVICE → CALIBRATION → LOAD DEFAULTS → LOAD command.

Overwriting factory default calibration values

It is possible to overwrite the factory-set calibration values and replace them with the currently defined calibration values, but take care when doing this. Please contact Martin Service if you have any questions about making this change.

Important! Overwriting factory default calibration values with custom values is permanent. If you have set a custom value and applied a CALIBRATION → LOAD DEFAULTS → SAVE ***command, you will not be able to recover the original factory default value.***

To overwrite the factory default calibration values:

1. Set new calibration values for the effects that you want to recalibrate by adjusting them as described above.
2. Apply a SERVICE → CALIBRATION → LOAD DEFAULTS → SAVE command.
3. Confirm that you want to permanently overwrite the factory default values by applying a SERVICE → CALIBRATION → SAVE SETTING → SAVE command.

Deleting all factory default calibration values

It is possible to delete all factory-set calibration values and return all the fixture's calibration values to zero.

Important! Setting all the default calibration values to zero is permanent. You will not be able to recover any of the original factory default calibration values once you have set them all to zero.

To delete all the factory default calibration values:

1. Apply a SERVICE → CALIBRATION → CLEAR ALL VALUES → RESTORE command.
2. Confirm that you want to permanently delete the factory default values by applying a SERVICE → CALIBRATION → SAVE SETTING → SAVE command.

Control/Settings via DMX

The Control / Settings DMX channel available in both Basic and Extended DMX modes lets you adjust fixture settings remotely via DMX. It gives access to most of the settings that are available in the control menus plus some additional settings. For a full list of the settings that are available via DMX on this channel, see ‘Control/Settings DMX channel’ on page 46.

This chapter only covers the settings that have not already been explained in the ‘Fixture setup using the control panel’ chapter starting on page 13.

To implement a command on the Control / Settings channel, you must hold the required DMX value for a certain number of seconds. The amount of time required is given in ‘Control/Settings DMX channel’ on page 46.

Parameter shortcuts

If you enable parameter shortcuts, also called effect shortcuts, the color and gobo wheels take the shortest path between two colors or gobos, crossing the open position if necessary. This setting gives the fastest changes.

If you disable parameter shortcuts, the color and gobo wheels will always avoid the open position when changing from one color or gobo to another. This avoids any flash of white light that may be visible if the wheel passes the open position.

Blacking out the display

It is possible to black out the fixture’s control panel display by sending a DMX command on the Control / Settings channel. Blacking out fixture’s displays reduces visual distractions in the lighting rig for audiences.

Hibernation mode

Hibernation mode sets light output intensity to zero and disables effect deployment. It brings power consumption down to around 15 W and provides an economical option if you want to keep power applied to the fixture when it is not in use. In an architectural or architainment setting, for example, you can set up a cue at the controller that switches the fixture to hibernation mode during periods when the fixture is not active.

When you bring the fixture out of hibernation mode, it performs a full reset.

Pan and tilt limits

The pan and tilt limit options available on the Control / Settings channel let you define minimum and maximum limits for pan and tilt angles so that you can install fixtures close to obstacles (such as other fixtures or trusses) with no risk of collision, so that the beam will only hit a certain area of a stage or set, or so that you can avoid the fixture shining into the eyes of the audience, for example. If you set limits, the fixture’s pan and tilt movement will remain in a ‘safe zone’ within those limits.

Store lower pan limit and **Store upper pan limit** set minimum and maximum limits for the fixture’s pan range. **Store lower tilt limit** and **Store upper tilt limit** do the same thing for tilt range.

To set a limit, use the pan or tilt DMX channel to move the head to the position where you want to set the limit, then send the appropriate **Store** command on the Control/Settings DMX channel. You must send the **Store** command for at least 1 second to activate it.

Note that when you power the fixture off, the head may move under its own weight to a position that is outside its pan and tilt limits.

Tungsten emulation

In tungsten emulation mode, the fixture's white light output is made warmer, the warm shift is increased at lower dimming levels, and an 'afterglow' effect is added after dimming. This mode gives the 'look and feel' of a fixture that uses an incandescent light bulb as its source.

Calibrating effects via DMX

You can adjust the home positions of pan, tilt and all the fixture's effects remotely via DMX by setting custom calibration offsets on the Control/Settings DMX channel.

Setting calibration offsets

To set a custom offset in the position of an effect:

1. Set the effect to a specific value via DMX (for example, set all the fixtures in a group to DMX value 200 on the zoom channel).
2. Select 'Enable calibration' on the Control/Settings channel and hold for 5 seconds to activate.
3. The fixture now registers the current positions of all effects and holds them there. To select an effect to adjust, you must first release it from its hold position by changing the value on its DMX channel by +/- 10%. The effect then returns to its hold position. The effect's DMX channel now represents the full calibration range. The range can vary but is typically +/- 5-10%. In this case you can adjust the effect's position using that effect's DMX channel (8- or 16-bit) as follows:
   - DMX value 0 = -5%
   - DMX value 127/32767 = 0%
   - DMX value 255/65535 = +5%.
4. Adjust the effect until it is in the required position (for example, adjust the zoom angle on each fixture in the group until the angle on all fixtures is identical – this is the position that you will obtain when you send DMX value 200).
5. Send a 'Store XXX calibration' command on the Control/Settings channel for each effect that you adjust and hold that command for 5 seconds to activate. The new calibration offset is now stored in memory.
6. When you have finished adjusting calibration offsets, send value 0 on the Control/Settings channel and hold for 5 seconds to exit the DMX calibration procedure and return to normal DMX control.

Calibration offsets that are stored in memory are not affected by powering the fixture off and on or by updating the fixture software.

Restoring default calibration offsets

If you want to delete all custom calibration offsets and return the offsets to their default values:

1. On the Control/Settings DMX channel, send a 'Reset all calibration values to factory defaults' command and hold for 5 seconds.
2. The fixture will return all effects to their default calibration values.

Note that, If you have overwritten the factory default values by applying a SERVICE → CALIBRATION → LOAD DEFAULTS → SAVE command in the fixture's onboard control panel, the fixture will return to the calibration values that were saved as the default values at that time. The SAVE command in the fixture's control panel permanently replaces the factory default calibration settings with any custom calibration settings that are applied at that time.

Using RDM

This chapter covers the RDM functions that are not already covered in the chapters on ‘Fixture setup’ and the ‘Control / Settings DMX channel’.

The chapter covers the use of Martin Companion to set up and manage the ERA 700 Performance IP via RDM. While we recommend the use of Martin Companion, most of the commonly available RDM controllers also support the ERA 700 Performance IP . Check with the controller manufacturer if you cannot find the Martin ERA 700 Performance IP in the list of supported fixtures. The exact procedures and command names used by different RDM controllers vary.

Setting up single or multiple fixtures

You can set behavior in one fixture by sending a unicast RDM command to that one fixture only, or you can set behavior in all the fixtures on the data link by sending a broadcast RDM command to all the fixtures.

Martin Companion® and RDM

To set up ERA 700 Performance IP fixtures via RDM, we recommend using the **Martin Companion Cable** PC-to-DMX interface that is available as an accessory from Martin suppliers. This tool plugs into the USB port of a Windows PC and connects to Martin fixtures over the DMX data link via a 5-pin XLR connector. The Martin Companion Cable is designed to work together with the **Martin Companion software suite** for Windows PCs. This software can be downloaded free of charge from the Martin website at www.martin.com. Martin Companion will always offer the latest ERA 700 Performance IP features and firmware when your PC is connected to the Internet.

Instructions for connecting the Martin Companion Cable are supplied with the tool and can also be downloaded from the Martin website.

Martin Companion offers the following features:

- Simple PC-based user interface
- Update of fixture firmware
- RDM configuration and DMX addressing
- Standalone show programming with automatic start when fixtures are powered on.

RDM functions

A full list of the RDM functions that ERA 700 Performance IP fixtures support is given at the end of this chapter. We refer to these functions using the more specific term ‘PIDs’ (‘Parameter IDs’).

Fixture discovery

Before you can communicate with fixtures using RDM, you must send a scan command (fixture discovery command) to all the devices on the data link so that the RDM controller can identify them. It does this by retrieving each device’s factory-set unique identifier (UID). This process can take some time, depending on the number of devices on the link.

To identify the fixtures on the link:

1. Check that the fixtures are correctly connected to the RDM controller on the data link and that power is applied to all fixtures.
2. Send a discovery command via RDM (Martin Companion does this automatically as soon as the cable is connected).
3. Give the controller time to identify the devices on the link and prepare for communication with the devices.

Supported parameters

ERA 700 Performance IP fixtures can communicate their supported control parameters to the RDM controller and give brief information on each parameter.

Example: setting a DMX address

You can set the DMX address of a fixture (or fixtures) on the data link via RDM. An example procedure from Martin Companion v. 2.0 might look like this, but the procedure will vary depending on which RDM controller you use:

1. Check that fixtures are powered on a connected to data over the DMX/RDM link.
2. Connect the Martin Companion Cable to your computer and to the DMX/RDM link.
3. Start the Martin Companion application.
4. Navigate to the **RDM** view in Martin Companion.
5. Wait until RDM Discovery has completed. This happens automatically, you just need to wait for the Discovery icon top right to stop blinking.
6. Navigate to the **Patch** tab and check the **Mode** and **Address** columns.
7. Update the values in those columns to change the DMX mode and/or DMX start address for the selected fixtures.

Fixture information

ERA 700 Performance IP fixtures can communicate the following information to the RDM controller:

- Basic fixture information – type of fixture.
- Name of product and manufacturer.
- Device label and fixture ID – This information can be edited by the user, providing a means of giving an individual fixture its own name and ID number.
- Serial number – This is a factory-set serial number that cannot be changed.
- Currently installed firmware version.
- List of temperature sensors and sensor readouts.
- Number of hours fixture has had power applied since manufacture (non-resettable).
- Number of on/off power cycles since manufacture (non-resettable).

Status messages

The ERA 700 Performance IP features a self-diagnostic system that detects any issues concerning correct operation or safety (temperature that exceeds safe level, for example) and communicates the issues as status messages or warnings. These messages can be useful in connection with service and maintenance. Error messages appear in the fixture's control panel display, but you can also call them up via RDM.

It is possible to:

- Call up a list of any status messages that the fixture has stored in memory.
- View information on the messages.
- Clear the stored list of status messages.

Managing the fixture

Most of the fixture settings and operations available using the fixture's control panel and/or the DMX Control/Settings channel are available via RDM. These are covered in the 'Fixture setup' and 'DMX Control/Settings channel' chapters.

However, additional functions are available via RDM only. These additional functions are listed below:

- The **Ethernet Setup** PIDs give more advanced control of the fixture's network addressing functions.
- The **Identify Device** PID makes the fixture flash a signal so that you can identify the fixture in the rig.
- The **DMX Reset** PID lets you decide whether it should be possible to send a reset command to the fixture via DMX. Disabling **DMX Reset** makes it impossible to reset a fixture accidentally, which could be a major disruption during a show.

- If you apply a **Display Errors** PID, the fixture's control panel display wakes up and displays any error messages, even if the display is blacked out.
- The **Auto Empty Water** PID enables the automatic de-humidifying function.
- The **Outdoor Actions** PID lets you run the forced de-humidifying sequence.
- Applying a **Fan Clean** PID activates a sequence that runs fans at full speed in order to remove dust and dirt. This function will not clean fan blades completely, but it can remove the worst of any accumulated dust.

RDM functions

ERA 700 Performance IP fixtures support the following RDM PIDs:

PID	Name	Description	GET	SET
Device discovery				
0x0001	DISC_UNIQUE_BRANCH	Fixture discovery	N/A	N/A
0x0002	DISC_MUTE	Fixture discovery	N/A	N/A
0x0003	DISC_UN_MUTE	Fixture discovery	N/A	N/A
Device information				
0x0060	DEVICE_INFO	Get basic fixture info	✓	
0x0080	DEVICE_MODEL_DESCRIPTION	Product name	✓	
0x0081	MANUFACTURER_LABEL	Manufacturer name	✓	
0x0082	DEVICE_LABEL	Info label (user-settable)	✓	✓
0x8003	FIXTURE_ID	Fixture number (user-settable)	✓	✓
0x8700	SERIAL_NUMBER	Fixture serial number	✓	
0x00C0	SOFTWARE_VERSION_LABEL	Firmware version	✓	
0x0200	SENSOR_DEFINITION	Sensor description	✓	
0x0201	SENSOR_VALUE	Sensor value	✓	✓
0x0400	DEVICE_HOURS	Fixture hours (non-resettable)	✓	✓
0x0405	DEVICE_POWER_CYCLES	Fixture power cycles (non-resettable)	✓	✓
DMX setup				
0x00E0	DMX_PERSONALITY	DMX mode	✓	✓
0x00E1	DMX_PERSONALITY_DESCRIPTION	DMX mode details	✓	
0x00F0	DMX_START_ADDRESS	DMX start address	✓	✓
0x0121	SLOT_DESCRIPTION	DMX channel details	✓	
Ethernet setup				
0x0700	LIST_INTERFACES	List Ethernet ports	✓	
0x0701	INTERFACE_LABEL	Name of Ethernet port	✓	
0x0702	INTERFACE_HARDWARE_ADDRESS_TYPE1	MAC address of Ethernet Port	✓	

0x0703	IPV4_DHCP_MODE	Enable DHCP client	✓	
0x0705	IPV4_CURRENT_ADDRESS	Get current IP address	✓	
0x0706	IPV4_STATIC_ADDRESS	Set static IP address	✓	✓
0x0709	INTERFACE_APPLY_CONFIGURATION	Apply Ethernet configuration		✓
Device management				
0x0050	SUPPORTED_PARAMETERS	Parameter discovery	✓	
0x0051	PARAMETER_DESCRIPTION	Parameter discovery	✓	
0x0090	FACTORY_DEFAULTS	Reset to factory defaults	✓	✓
0x1000	IDENTIFY_DEVICE	Identify fixture in rig	✓	✓
0x1001	RESET_DEVICE	Reset fixture		✓
0x1020	PERFORM_SELFTEST	Run self-test	✓	✓
0x1021	SELF_TEST_DESCRIPTION	Self-test description	✓	
0x0500	DISPLAY_INVERT	Flip display	✓	✓
0x0501	DISPLAY_LEVEL	Set display intensity	✓	✓
0x0600	PAN_INVERT	Invert pan	✓	✓
0x0601	TILT_INVERT	Invert tilt	✓	✓
0x8310	DIMMER_CURVE	Set dimmer curve	✓	✓
0x8001	DMX_RESET	Enable fixture resettable via DMX	✓	✓
0x8301	EFFECT_SPEED	Set effects speed	✓	✓
0x8302	EFFECT_SHORTCUTS_ENABLE	Enable effect shortcuts (parameter shortcuts)	✓	✓
0x8308	DISPLAY_ERRORS_ENABLE	Show errors in display	✓	✓
0x8310	DIMMER_CURVE	Set dimmer curve	✓	✓
0x8311	FOCUS_TRACKING	Set focus tracking	✓	✓
0x8312	DISPLAY_AUTO_OFF	Enable display auto off	✓	✓
0x8329	HIBERNATION_MODE	Enable hibernation	✓	✓
0x832A	TUNGSTEN_MODE	Enable tungsten mode	✓	✓
0x8336	AUTO_EMPTY_WATER	Enable automatic de-humidifying	✓	✓
0x8337	OUTDOOR_ACTIONS	Forced de-humidifying (0 = Stop, 1 = N/A, 2 = Forced de-humidify, 3 = N/A)	✓	✓
0x8338	STANDBY_HEATING	Enable automatic standby heating	✓	✓
0x8400	PAN_TILT_SPEED	Set P/T speed	✓	✓

0x8402	PAN_TILT_LIMITATION_ENABLE	Enable P/T limits	✓	✓
0x8403	PAN_LIMITATION_MINIMUM	Pan minimum limit	✓	✓
0x8404	PAN_LIMITATION_MAXIMUM	Pan maximum limit	✓	✓
0x8405	TILT_LIMITATION_MINIMUM	Tilt minimum limit	✓	✓
0x8406	TILT_LIMITATION_MAXIMUM	Tilt maximum limit	✓	✓
0x8406	TILT_LIMITATION_MAXIMUM	Tilt maximum limit	✓	✓
0x8409	PAN_TILT_LIMITATION_RESET	Reset P/T limits	✓	✓
0x8603	FAN_CLEAN	Fan clean mode	✓	✓
0x8604	FAN_MODE	Fan mode	✓	✓
Status messages				
0x0020	QUEUED_MESSAGE	Get queued messages	✓	
0x0030	STATUS_MESSAGES	Get status/error information	✓	
0x0031	STATUS_ID_DESCRIPTION	Status/error description	✓	
0x0032	CLEAR_STATUS_ID	Clear status/error queue		✓

Operating the fixture

Warning! Read the Safety and Installation Manual that is included at the end of this User Manual, paying particular attention to the Safety Precautions section, before operating the fixture.

The output of LEDs, like all light sources, changes gradually over many thousands of hours of use. If you require products to perform to very precise color specifications, you may eventually need to make small readjustments at the lighting controller.

Controlling via DMX

Once you have set up fixtures' DMX modes and DMX addresses using the fixtures' control panels or via RDM, you can control fixtures using the DMX controller that is connected to the installation.

See the 'DMX protocols' section at the end of this manual for details of the control options available.

Control menus

Default settings are given in **bold print**.

Menu level 1	Menu level 2	Menu level 3	Notes
DMX SETUP			
DMX ADDRESS	**1** - 472		DMX address **(default address = 1)**. The DMX address range is limited so that the fixture will always have enough DMX channels within the 512 available.
CONTROL MODE	**BASIC**		Basic DMX control mode
	EXTENDED		Extended DMX control mode
PERSONALITY			
NET ADDRESS	UNIVERSE		Set fixture's network addressing data
	IP ADDRESS		
	SUBNET MASK		
NET SWITCH	OFF		Network protocol auto-detect on
	ON		
PAN INVERSE	**NO**		Inverse DMX pan control: right → left
	YES		
TILT INVERSE	**NO**		Inverse DMX tilt control: down → up
	YES		
PAN/TILT SPEED	**FAST**		Adjust speed of pan and tilt movement
	SLOW		
DIMMER CURVE	LINEAR		Optically linear dimming curve
	SQUARE LAW		Square law dimming curve
	INV SQ LAW		Inverse square law dimming curve
	S-CURVE		S-curve (fixture emulates incandescent lamp voltage linear RMS dimming curve)
DIMMING SPEED	**FAST**		Snap dimming (fast dimmer speed)
	SLOW		Fade dimming (slow dimmer speed)
NO DATA MODE	BLACKOUT		If data connection is lost, fixture will blackout
	HOLD		If data connection is lost, fixture holds latest received data value at all channels
SCENE CATCH	SCENE CATCH RECORD		Saves all current DMX values as playback scene
	SCENE CATCH ON		Sets fixture to run currently saved playback scene after power cycle or reset. Any new DMX input disables scene playback until next power cycle.
	SCENE CATCH OFF		Disables playback scene functionality

COOLING MODE	**REGULATED FANS**		Fans optimized for light intensity (temperature controlled by regulating fan speed, light output unaffected)
	FULL		Fans set to full constant speed
	MEDIUM		Fans set to medium constant speed
	LOW		Fans set to low constant speed
	ULTRA LOW		Fans set to lowest possible speed. Output reduced to 70% and PWM to 19200 Hz for lowest noise
FOCUS TRACKING	ENABLE NEAR DISTANCE		Focus tracks zoom position
	ENABLE MEDIUM DISTANCE		
	ENABLE FAR DISTANCE		
	DISABLE		
CLIMATE CONTROL	STANDBY HEATING	**ON**	Standby heating ON (anti-freeze function, fixture ready for instant startup below freezing)
		OFF	Stand-by heating OFF (fixture needs to pre-heat before startup below freezing)
	DE-HUMIDIFY	**ON**	De-humidify = ON (default) - (Unit in automatic climate control mode)
		OFF	De-humidify = OFF
DISPLAY	DISPLAY ROTATION	**NORMAL**	Display orientation normal
		ROTATE 180	Display orientation rotated 180°
	DISPLAY INTENSITY	10-**100**	Set display intensity in % (**default = 100**)
	TEMPERATURE UNIT	**°C**	All temperature readouts in C°
		°F	All temperature readouts in F°
	SCREEN LOCK	**OFF**	Setting to ON immediately disables control panel buttons. To release lock temporarily, press UP-DOWN-UP-DOWN-ENTER buttons in sequence. To release lock permanently, set to OFF.
		ON	
DEFAULT SETTINGS			
FACTORY DEFAULT	**NO**		Return all settings (except calibrations) to factory defaults
	YES		
FIXTURE TEST			
TEST ALL	TESTING		Run test of entire fixture
TEST DIMMER	DIMMER		Run test sequence of LEDs only. To test a specific LED group, use Up/Down buttons to scroll through groups and pause. Press Enter to restart test sequence. Press Menu button to exit test.

TEST EFFECTS	CYAN	Run test sequence of effects. To test a specific effect, use Up/Down buttons to scroll through effects and pause. Press Enter to restart test sequence. Press Menu button to exit test. *GOBO1 = Test rotating gobo wheel RGOBO1 = Test rotating gobo rotation GOBO 2 = Test static gobo wheel
	MAGENTA	
	YELLOW	
	CTO	
	COLOR	
	GOBO1*	
	RGOBO1*	
	GOBO2*	
	… Scroll through effects …	
	BLADE4 POSITION	
	BLADE4 ANGLE	
TEST PAN/TILT	PAN	Run test sequence of pan functions. Press Menu button to stop test
	TILT	Run test sequence of tilt functions. Press Menu button to stop test
INFORMATION		
POWER ON TIME	xxxxxH	Display hours fixture has been powered on since manufacture (not user-resettable)
LED HOURS	xxxxxH	Display number of hours fixture LEDs have been powered on since manufacture (not user-resettable)
SW VERSION	Vxx	Displays currently active software version
FIXTURE ID	0 - 9999	User-settable fixture ID number
RDM UID	XXXXXXXXXXXX	Displays fixture's unique RDM ID
TEMPERATURES	LED / BASE TEMP	Displays temperature in °C of all PCBs
FIXTURE TYPE	ERA 700 Performance IP	Displays fixture type
DMX LIVE		
STROBE	0 - 255	Scroll to see values being received on each DMX channel
DIMMER	0 - 255	
DIMMER FINE	0 - 255	
CYAN	0 - 255	
CYAN FINE	0 - 255	
… Scroll through channels …	0 - 255	
BLADE4 ANGLE	0 - 255	
BLADE ROT	0 - 255	
PAN	0 - 255	
PAN FINE	0 - 255	
TILT	0 - 255	
TILT FINE	0 - 255	
FUNCTION	1 - 255	

MANUAL CONTROL			
RESET	ALL	**NO**	Reset fixture
		YES	
	PAN / TILT	**NO**	Reset pan and tilt movement
		YES	
	EFFECTS	**NO**	Reset all effects
		YES	
STROBE	0-255		Scroll to select and manually control each effect
DIMMER	0-255		
DIMMER FINE	0-255		
CYAN	0-255		
CYAN FINE	0-255		
… SCROLL THROUGH EFFECTS …	… 0-255 …		
BLADE4 POSITION	0-255		
BLADE4 ANGLE	0-255		
BLADE ROT	0-255		
PAN	0-255		
PAN FINE	0-255		
TILT	0-255		
TILT FINE	0-255		
SERVICE			
PAN/TILT FEEDBACK	OFF		Disable pan/tilt feedback sensors
	ON		Enable pan/tilt feedback sensors
CALIBRATION	PAN	-128 -> 127	Calibrate each effect
	TILT	-128 -> 127	
	CYAN	-128 -> 127	
	… SCROLL THROUGH EFFECTS …	-128 -> 127	
	BLADE4 POSITION	-128 -> 127	
	BLADE4 ANGLE	-128 -> 127	

CALIBRATION (continued)	LOAD DEFAULTS	LOAD	Load factory default calibration settings (or the calibration settings that have been saved with a SAVE command if the factory defaults have been overwritten)
		SAVE	Save current custom calibration settings as default settings (a SAVE SETTING → SAVE command is required to confirm). **Important!** Applying LOAD DEFAULTS → SAVE and confirming with SAVE SETTING → SAVE will permanently overwrite the factory default calibration settings and should normally be used by Martin Service only!
	SAVE SETTING	SAVE	Confirm any changes made to calibration values and any changes made in the LOAD DEFAULTS and CLEAR ALL VALUES menus
	CLEAR ALL VALUES	RESTORE	Reset all calibration values to zero. (a SAVE SETTINGS → SAVE command is required to confirm). **Important!** Applying CLEAR ALL VALUES → RESTORE and confirming with SAVE SETTING → SAVE will permanently overwrite the factory default calibration settings and should normally be used by Martin Service only!
DE-HUMIDIFY	FORCE DE-HUMIDIFY		Stop normal operation, run de-humidifying sequence and return to normal operation when sequence is complete
	STOP DE-HUMIDIFY		Stop the forced de-humidifying sequence at any time

DMX protocols

Basic DMX Mode

42 DMX channels

Channel	DMX Value	Function	Fade type	Default value
1	0–19 20–49 50–200 201–210 211–255	**Strobe/shutter** Shutter closed Shutter open Strobe (slow → fast) Shutter open Random strobe (slow → fast)	Fade	30
2 **3**	0–65535	**Dimmer** Closed → Open	Fade	0
4 **5**	0–65535	**Cyan** Intensity 0 → 100%	Fade	0
6 **7**	0–65535	**Magenta** Intensity 0 → 100%	Fade	0
8 **9**	0–65535	**Yellow** Intensity 0 → 100%	Fade	0
10 **11**	0–65535	**CTO** Open (6500 K) → Warm (2700 K)	Fade	0
12	0 1–14 15 16–29 30 31–44 45 46–59 60 61–74 75 76–89 90 91–104 105 106–119 120–160 161–163 164–166 167–169 170–172	**Color wheel** ***Continuous color changing*** Open Open → Color 1 Color 1 (Red) Color 1 → Color 2 Color 2 (Deep Blue) Color 2 → Color 3 Color 3 (Deep Green) Color 3 → Color 4 Color 4 (Lavender) Color 4 → Color 5 Color 5 (Deep Orange Color 5 → Color 6 Color 6 (CRI) Color 6 → Color 7 Color 7 (Congo Blue) Color 7 → Open Open ***Stepped color changing*** Color 1 (Red) Color 2 (Deep Blue) Color 3 (Deep Green) Color 4 (Lavender)	Snap	0

12 ctd.	173–175 176–178 179–181 182–192 193–214 215–221 222–243 244–247 248–251 252–255	Color 5 (Deep Orange) Color 6 (CRI) Color 7 (Congo Blue) Open ***Continuous color wheel rotation*** CW, fast → slow Stop (wheel stops at current position) CCW, slow → fast ***Random colors*** Fast Medium Slow	Snap	0
13	0 1 2 3 4 5 6 7 8–127 128–136 137–145 146–154 155–163 164–172 173–181 182–190 191 192–215 216–239 240 241-255	**Gobo Wheel 1 (rotating gobos)** **gobo selection, movement** ***Gobo selection*** *(set indexing angle or rotation on next two channels)* Open Gobo 1 (Tri Array) Gobo 2 (Ker Pow) Gobo 3 (Mirror Block) Gobo 4 (Stretched Out) Gobo 5 (Point and Curve) Gobo 6 (Pandora's Cluster) Gobo 7 (Limbo) *No function* ***Gobo shake*** *(additional indexing and rotation can be added on next two channels)* Shake Gobo 1 (Tri Array) slow → fast Shake Gobo 2 (Ker Pow) slow → fast Shake Gobo 3 (Mirror Block) slow → fast Shake Gobo 4 (Stretched Out) slow → fast Shake Gobo 5 (Point and Curve) slow → fast Shake Gobo 6 (Pandora's Cluster) slow → fast Shake Gobo 7 (Limbo) slow → fast *No function* ***Gobo wheel rotation*** *(set indexed angle of gobos on next two channels)* CW gobo wheel rotation, fast → slow CCW gobo wheel rotation, slow → fast ***Random gobo*** *(set indexed angle of gobos on next two channels)* Stop (gobo wheel stops at current full gobo – no split gobos) Random gobo, slow → fast	Snap	0
14	0–32767	**Gobo Wheel 1 (rotating gobos)** **gobo indexing angle/gobo rotation speed and direction** ***Gobo indexing*** 0 = -180°, 16384 = 0°, 32767 = +180°	Fade	16384
15	32768 - 49150 49151 - 49152 49153 - 65535	***Gobo rotation*** Gobo rotation CW fast → slow Stop (gobo stops at current position) Gobo rotation CCW slow → fast		

		Gobo Wheel 2 (static gobos) selection		
		Stepped gobo selection		
	0	Open		
	1	Gobo 1 (Window Perspective)		
	2	Gobo 2 (Dots and Dashes)		
	3	Gobo 3 (Wurly Curly)		
	4	Gobo 4 (Lava Shimmer)		
	5	Gobo 5 (Wool Ball)		
	6	Gobo 6 (Pave the Way)		
	7	Gobo 7 (Square Perspective)		
	8	Gobo 8 (Paint Play)		
	9–23	*No function*		
		Gobo wheel indexing (split gobos)		
	24	Open		
	25–34	Open → Gobo 1		
	35	Gobo 1 (Window Perspective)		
	36–45	Gobo 1 → Gobo 2		
	46	Gobo 2 (Dots and Dashes)		
	47–56	Gobo 2 → Gobo 3		
	57	Gobo 3 (Wurly Curly)		
	58–67	Gobo 3 → Gobo 4		
	68	Gobo 4 (Lava Shimmer)		
	69–78	Gobo 4 → Gobo 5		
	79	Gobo 5 (Wool Ball)		
	80–89	Gobo 5 → Gobo 6		
16	90	Gobo 6 (Pave the Way)	Snap	0
	91–100	Gobo 6 → Gobo 7		
	101	Gobo 7 (Square Perspective)		
	102–111	Gobo 7 → Gobo 8		
	112	Gobo 8 (Paint Play)		
	113–122	Gobo 8 → Open		
	123	Open		
	124–127	*No function*		
		Gobo wheel shake		
	128–134	Shake around Open slow → fast		
	135–141	Shake around Gobo 1 slow → fast		
	142–148	Shake around Gobo 2 slow → fast		
	149–155	Shake around Gobo 3 slow → fast		
	156–162	Shake around Gobo 4 slow → fast		
	163–169	Shake around Gobo 5 slow → fast		
	170–176	Shake around Gobo 6 slow → fast		
	177–183	Shake around Gobo 7 slow → fast		
	184–190	Shake around Gobo 8 slow → fast		
	191	*No function*		
		Gobo wheel rotation		
	192–214	CW gobo wheel rotation, fast → slow		
	215–216	Stop (wheel stops at current position)		
	217–239	CCW gobo wheel rotation, slow → fast		
		Random gobo		
	240	Stop (wheel stops at current gobo)		
	241–255	Random gobo slow → fast		

17	0 1 2–127 128–191 192–255	**Animation Wheel** ***Stepped insertion selection*** Open Wheel in gate *No function* ***Gentle shake*** Animation wheel rocking slow → fast (set base index position on next channel) *No function*	Snap	0
18	0–63 64 65–127 128–190 191–192 193–255	**Animation Wheel indexing/rotation** ***Indexed position or center of gentle shake movement*** *(if selected on previous channel)* -180° to -1° 0° 1° to 180° ***Animation wheel rotation*** CW rotation fast → slow Stop (wheel stops at current position) CCW rotation slow → fast	Fade	128
19	0–255	**Frost 1 (Light)** No frost → full frost	Fade	0
20	0–255	**Frost 2 (Heavy)** No frost → full frost	Fade	0
21	0 1 2 3–127 128–159 160–191 192–255	**Prism selection** ***Stepped selection*** Open Prism 1 in gate Prism 2 in gate *No function* ***Prism shake*** Prism 1 shake slow → fast Prism 2 shake slow → fast ***Wheel rotation*** *No function*	Snap	0
22	0–63 64 65–127 128–190 191–192 193–255	**Prism indexing/rotation** ***Continuous prism indexing*** -180° to -1° 0° 1° to 180° ***Prism rotation*** CW rotation fast → slow Stop (prism stops at current position) CCW rotation slow → fast	Fade	64
23	0–200 201–225 226–230 231–255	**Iris** Open → closed Animated fast → slow Iris stops at current position Animated reverse slow → fast	Fade	0

24 **25**	0–65535	**Zoom** Wide → narrow	Fade	32768
26 **27**	0–65535	**Focus** Infinity → near	Fade	32768
28	0–255	**Framing 1 position** Out → in	Fade	0
29	0–126 127–128 129–255	**Framing 1 angle** Minimum Parallel Maximum	Fade	32768
30	0–255	**Framing 2 position** Out → in	Fade	0
31	0–126 127–128 129–255	**Framing 2 angle** Minimum Parallel Maximum	Fade	32768
32	0–255	**Framing 3 position** Out → in	Fade	0
33	0–126 127–128 129–255	**Framing 3 angle** Minimum Parallel Maximum	Fade	32768
34	0–255	**Framing 4 position** Out → in	Fade	0
35	0–126 127–128 129–255	**Framing 4 angle** Minimum Parallel Maximum	Fade	32768
36	0–126 127–128 129–255	**Framing Rotation** Minimum Parallel Maximum	Fade	32768
37 **38**	0–65535	**Pan** Left → right	Fade	32768
39 **40**	0–65535	**Tilt** Forward → backward	Fade	32768
41	**Control / Settings** (see Control/Settings DMX channel' on page 46)			
42	0 1–127 128 129–254 255	**LED PWM frequency** Reserved, -2.8% Variable -2.8% – 0% 3600 Hz Variable 0% – +2.8% 19200 Hz	Fade	128

Extended DMX Mode

54 DMX channels

Channel	DMX Value	Function	Fade type	Default value
1	0–19 20–49 50–200 201–210 211–255	**Strobe/shutter** Shutter closed Shutter open Strobe (slow → fast) Shutter open Random strobe (slow → fast)	Fade	30
2 **3**	0–65535	**Dimmer** Closed → Open	Fade	0
4 **5**	0–65535	**Cyan** Intensity 0 → 100%	Fade	0
6 **7**	0–65535	**Magenta** Intensity 0 → 100%	Fade	0
8 **9**	0–65535	**Yellow** Intensity 0 → 100%	Fade	0
10 **11**	0–65535	**CTO** Open (6500 K) → Warm (2700 K)	Fade	0
12	0 1–14 15 16–29 30 31–44 45 46–59 60 61–74 75 76–89 90 91–104 105 106–119 120–160 161–163 164–166 167–169 170–172	**Color wheel** ***Continuous color changing*** Open Open → Color 1 Color 1 (Red) Color 1 → Color 2 Color 2 (Deep Blue) Color 2 → Color 3 Color 3 (Deep Green) Color 3 → Color 4 Color 4 (Lavender) Color 4 → Color 5 Color 5 (Deep Orange Color 5 → Color 6 Color 6 (CRI) Color 6 → Color 7 Color 7 Congo Blue Color 7 → Open Open ***Stepped color changing*** Color 1 Color 2 Color 3 Color 4	Snap	0

12 ctd.	173–175 176–178 179–181 182–192 193–214 215–221 222–243 244–247 248–251 252–255	Color 5 (Deep Orange) Color 6 (CRI) Color 7 (Congo Blue) Open ***Continuous color wheel rotation*** CW, fast → slow Stop (wheel stops at its current position) CCW, slow → fast ***Random colors*** Fast Medium Slow	Snap	0
13	0 1 2 3 4 5 6 7 8–127 128–136 137–145 146–154 155–163 164–172 173–181 182–190 191 192–215 216–239 240 241-255	**Gobo Wheel 1 (rotating gobos)** **gobo selection, movement** ***Gobo selection*** *(set indexing angle or rotation on next two channels)* Open Gobo 1 (Tri Array) Gobo 2 (Ker Pow) Gobo 3 (Mirror Block) Gobo 4 (Stretched Out) Gobo 5 (Point and Curve) Gobo 6 (Pandora's Cluster) Gobo 7 (Limbo) *No function* ***Gobo shake*** *(additional indexing and rotation can be added on next two channels)* Shake Gobo 1 (Tri Array) slow → fast Shake Gobo 2 (Ker Pow) slow → fast Shake Gobo 3 (Mirror Block) slow → fast Shake Gobo 4 (Stretched Out) slow → fast Shake Gobo 5 (Point and Curve) slow → fast Shake Gobo 6 (Pandora's Cluster) slow → fast Shake Gobo 7 (Limbo) slow → fast *No function* ***Gobo wheel rotation*** *(set indexed angle of gobos on next two channels)* CW gobo wheel rotation, fast → slow CCW gobo wheel rotation, slow → fast ***Random gobo*** *(set indexed angle of gobos on next two channels)* Stop (gobo wheel stops at current full gobo – no split gobos) Random gobo, slow → fast	Snap	0
14 **15**	0–32767 32768 - 49150 49151 - 49152 49153 - 65535	**Gobo Wheel 1 (rotating gobos)** **gobo indexing angle/gobo rotation speed and direction** ***Gobo indexing*** 0 = -180°, 16384 = 0°, 32767 = +180° ***Gobo rotation*** Gobo rotation CW fast → slow Stop (gobo stops at current position) Gobo rotation CCW slow → fast	Fade	16384

		Gobo Wheel 2 (static gobos) selection		
		Stepped gobo selection		
	0	Open		
	1	Gobo 1 (Window Perspective)		
	2	Gobo 2 (Dots and Dashes)		
	3	Gobo 3 (Wurly Curly)		
	4	Gobo 4 (Lava Shimmer)		
	5	Gobo 5 (Wool Ball)		
	6	Gobo 6 (Pave the Way)		
	7	Gobo 7 (Square Perspective)		
	8	Gobo 8 (Paint Play)		
	9–23	*No function*		
		Gobo wheel indexing (split gobos)		
	24	Open		
	25–34	Open → Gobo 1		
	35	Gobo 1 (Window Perspective)		
	36–45	Gobo 1 → Gobo 2		
	46	Gobo 2 (Dots and Dashes)		
	47–56	Gobo 2 → Gobo 3		
	57	Gobo 3 (Wurly Curly)		
	58–67	Gobo 3 → Gobo 4		
	68	Gobo 4 (Lava Shimmer)		
	69–78	Gobo 4 → Gobo 5		
	79	Gobo 5 (Wool Ball)		
	80–89	Gobo 5 → Gobo 6		
16	90	Gobo 6 (Pave the Way)	Snap	0
	91–100	Gobo 6 → Gobo 7		
	101	Gobo 7 (Square Perspective)		
	102–111	Gobo 7 → Gobo 8		
	112	Gobo 8 (Paint Play)		
	113–122	Gobo 8 → Open		
	123	Open		
	124–127	*No function*		
		Gobo wheel shake		
	128–134	Shake around Open slow → fast		
	135–141	Shake around Gobo 1 slow → fast		
	142–148	Shake around Gobo 2 slow → fast		
	149–155	Shake around Gobo 3 slow → fast		
	156–162	Shake around Gobo 4 slow → fast		
	163–169	Shake around Gobo 5 slow → fast		
	170–176	Shake around Gobo 6 slow → fast		
	177–183	Shake around Gobo 7 slow → fast		
	184–190	Shake around Gobo 8 slow → fast		
	191	*No function*		
		Gobo wheel rotation		
	192–214	CW gobo wheel rotation, fast → slow		
	215–216	Stop (wheel stops at current position)		
	217–239	CCW gobo wheel rotation, slow → fast		
		Random colors		
	240	Stop (wheel stops at current color)		
	241–255	Random colors slow → fast		

17	0 1 2–127 128–191 192–255	**Animation Wheel** ***Stepped insertion selection*** Open Wheel in gate *No function* ***Gentle shake*** Animation wheel rocking slow → fast (set base index position on next channel) *No function*	Snap	0
18	0–16383 16384 16385–32767	**Animation Wheel indexing/rotation** ***Indexed position or center of gentle shake movement*** *(if selected on previous channel)* -180° to -1° 0° 1° to 180°	Fade	128
19	32768–49150 49151–49152 49153–65535	***Animation wheel rotation*** CW rotation fast → slow Stop (wheel stops at current position) CCW rotation slow → fast		
20	0–255	**Frost 1 (Light)** No frost → full frost	Fade	0
21	0–255	**Frost 2 (Heavy)** No frost → full frost	Fade	0
22	0 1 2 3–127 128–159 160–191 192–255	**Prism selection** ***Stepped selection*** Open Prism 1 in gate Prism 2 in gate *No function* ***Prism shake*** Prism 1 shake slow → fast Prism 2 shake slow → fast ***Wheel rotation*** *No function*	Snap	0
23	0–16383 16384 16385–32767	**Prism indexing/rotation** ***Continuous prism indexing*** -180° to -0.1° 0° 0.1° to 180°	Fade	128
24	32768–49150 49151–49152 49153–65535	***Prism rotation*** CW rotation fast → slow Stop (prism stops at current position) CCW rotation slow → fast		
25	0–49151	**Iris** Iris open → closed ***Opening pulse***	Fade	0
26	49152 49153–57343 57344 57345–65535	Stop (iris stops at current position) Opening pulse slow → fast ***Closing pulse*** Stop (iris stops at current position) Closing pulse slow → fast		

27 **28**	0–65535	**Zoom** Wide → narrow	Fade	32768
29 **30**	0–65535	**Focus** Infinity → near	Fade	32768
31 **32**	0–65535	**Framing 1 position** Out → in	Fade	0
33 **34**	0–32766 32767–32768 32769–65535	**Framing 1 angle** Minimum Parallel Maximum	Fade	32768
35 **36**	0–65535	**Framing 2 position** Out → in	Fade	0
37 **38**	0–32766 32767–32768 32769–65535	**Framing 2 angle** Minimum Parallel Maximum	Fade	32768
39 **40**	0–65535	**Framing 3 position** Out → in	Fade	0
41 **42**	0–32766 32767–32768 32769–65535	**Framing 3 angle** Minimum Parallel Maximum	Fade	32768
43 **44**	0–65535	**Framing 4 position** Out → in	Fade	0
45 **46**	0–32766 32767–32768 32769–65535	**Framing 4 angle** Minimum Parallel Maximum	Fade	32768
47 **48**	0–32766 32767–32768 32769–65535	**Framing Rotation** Minimum Parallel Maximum	Fade	32768
49 **50**	0–65535	**Pan** Left → right	Fade	32768
51 **52**	0–65535	**Tilt** Forward → backward	Fade	32768
53	**Control / Settings** (see Control/Settings DMX channel' on page 46)			
54	0 1–127 128 129–254 255	**LED PWM frequency** Reserved, -2.8% Variable -2.8% – 0% 3600 Hz Variable 0% – +2.8% 19200 Hz	Fade	128

Control/Settings DMX channel

The table below lists the control/settings functions available via DMX. They are implemented as follows:

- In Basic DMX Mode: on channel 41
- In Extended DMX Mode: on channel 53

The default settings are shown in **bold print** in the table below.

The commands on the Control/Settings channel must be held for a certain number of seconds in order to implement them. The required number of seconds is indicated after each command.

Channel	DMX Value	Function	Fade type	Default value
Channel depends on DMX mode	0–9	*No function*	Snap	0
	10–14	Reset fixture (5 sec.)		
	15	*No function*		
	16	Reset color (5 sec.)		
	17	Reset beam (5 sec.)		
	18	Reset pan and tilt (5 sec.)		
	19–22	*No function*		
	23	Linear dimming curve (1 sec.)		
	24	**Square Law dimming curve** (1 sec.)		
	25	Inverse Square Law dimming curve (1 sec.)		
	26	S–Curve dimming curve (1 sec.)		
	27	**Pan and tilt speed = Standard** (1 sec.)		
	28	Pan and tilt speed = Fast (1 sec.)		
	29	Pan and tilt speed = Smooth (1 sec.)		
	30	**Parameter shortcuts = ON**		
	31	Parameter shortcuts = OFF		
	32	Disable focus tracking (1 sec.)		
	33	Enable focus tracking, near distance (1 sec.)		
	34	**Enable focus tracking, medium distance** (1 sec.)		
	35	Enable focus tracking, far distance (1 sec.)		
	36–51	*No function*		
	52	**Control panel display = ON** (1 sec.)		
	53	Control panel display = OFF (1 sec.)		
	54	**Fan speed regulated** (1 sec.)		
	55	Fan speed full (1 sec.)		
	56	Fan speed medium (1 sec.)		
	57	Fan speed low (1 sec.)		
	58	Fan speed ultra-low (1 sec.)		
	59–60	*No function*		
	61	Hibernation = ON (1 sec.)		
	62	**Hibernation = OFF** (1 sec.)		
	63-64	*No function*		
	65	Pan and tilt limit = ON (1 sec.)		
	66	**Pan and tilt limit = OFF** (1 sec.)		
	67	Store lower pan limit (1 sec.)		
	68	Store upper pan limit (1 sec.)		
	69	Store lower tilt limit (1 sec.)		
	70	Store upper tilt limit (1 sec.)		
	71	Reset pan and lilt limits (1 sec.)		

	72	Tungsten emulation = ON (1 sec.)		
	73	**Tungsten emulation = OFF** (1 sec.)		
	74	Scene capture record (5 sec.)		
	75	Scene capture standalone = ON (5 sec.)		
	76	**Scene capture standalone = OFF** (5 sec.)		
	77–99	*No function*		
	100	Enable calibration (5 sec.)		
	101	Store pan and tilt calibration (5 sec.)		
	102	Store dimmer calibration (5 sec.)		
	103	Store Cyan calibration (5 sec.)		
	104	Store Magenta calibration (5 sec.)		
	105	Store Yellow calibration (5 sec.)		
	106	Store CTO calibration (5 sec.)		
	107	Store all CMYC calibration (5 sec.)		
	108	Store rotating gobo 1 / current slot index calibration (5 sec.)		
	109	*No function*		
	110	Store fixed gobo calibration (5 sec.)		
	111	Store beam effect/framing/barndoor calibration (5 sec.)		
	112	Store iris calibration (5 sec.)		
	113	Store focus calibration (5 sec.)		
	114	Store zoom calibration (5 sec.)		
	115	Store color wheel calibration (5 sec.)		
	116–198	*No function*		
	199	Reset all calibration values to factory defaults (5 sec.)		
	200–205	*No function*		
	206	**Automatic standby heating = ON** (1 sec.)		
	207	Automatic standby heating = OFF (1 sec.)		
	208	**Automatic de-humidification = ON** (1 sec.)		
	209	Automatic de-humidification = OFF (1 sec.)		
	210	Stop de-humidification, return to normal operation (1 sec.)		
	211	*No function*		
	212	Forced de-humidification – stops when fixture finishes sequence or when DMX value is changed to 210 (1 sec.)		
	213–255	*No function*		

	Disposing of this product Martin® products are supplied in compliance with Directive 2012/19/EC of the European Parliament and of the Council of the European Union on WEEE (Waste Electrical and Electronic Equipment), where applicable. Help preserve the environment! Ensure that this product is recycled at the end of its life. Your supplier can give details of local arrangements for the disposal of Martin products.

Compliance and specifications

See the Safety and Installation Manual attached to this user manual for details of this product's compliance with national and international standards, FCC rules etc. See the Martin website at www.martin.com for technical specifications for this product.

ERA 700 Performance IP

Safety and Installation Manual

Martin®
by HARMAN

Dimensions

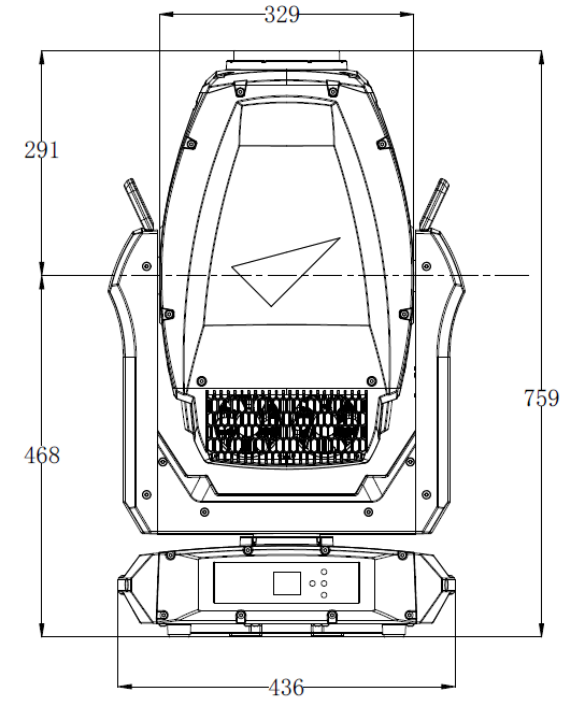

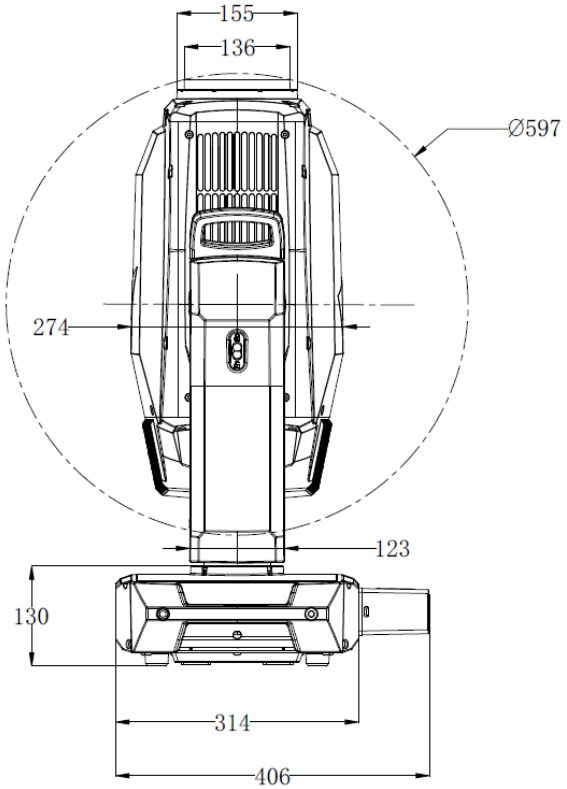

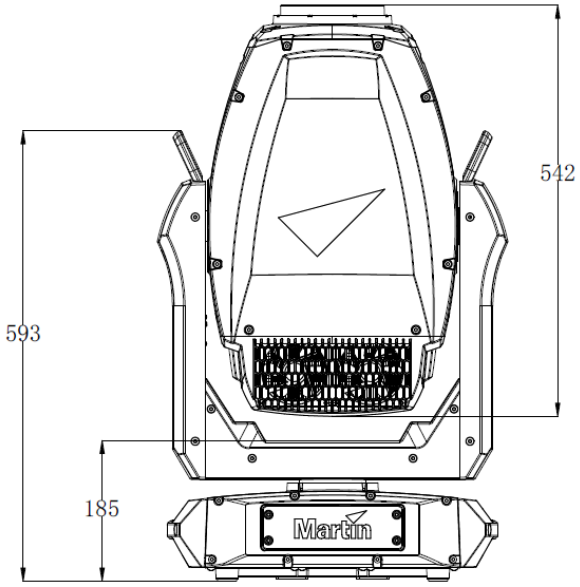

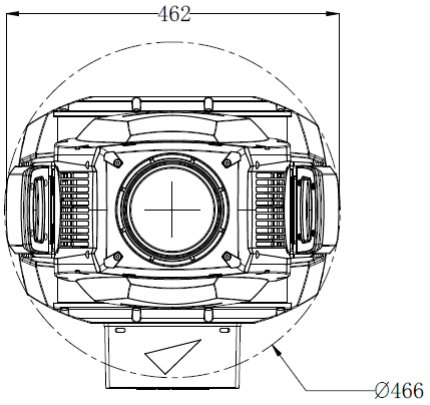

All dimensions are in millimeters

©2023 HARMAN PROFESSIONAL DENMARK ApS. All rights reserved. Features, specifications and appearance are subject to change without notice. HARMAN PROFESSIONAL DENMARK ApS and all affiliated companies disclaim liability for any injury, damage, direct or indirect loss, consequential or economic loss or any other loss occasioned by the use of, inability to use or reliance on the information contained in this document. Martin is a registered trademark of HARMAN PROFESSIONAL DENMARK ApS registered in the United States and/or other countries.

HARMAN PROFESSIONAL DENMARK ApS, Olof Palmes Allé 44, 8200 Aarhus N, Denmark
HARMAN PROFESSIONAL SOLUTIONS U.S., 8500 Balboa Blvd., Northridge CA 91329, USA

www.martin.com

ERA 700 Performance IP Safety and Installation Manual Revision C

Table of contents

Dimensions 2
Safety information 4
Introduction 9
- Before using the product for the first time 9
- Applying mains power 9
- Packing and unpacking 9

Fixture overview 10
Physical installation 11
- Installation location 11
- Avoiding damage from other light sources 11
- Standing the fixture on a flat surface 11
- Mounting the fixture on a truss 11
- Securing with a safety cable 12

AC mains power 13
- Connecting to power 13

Maintenance 14
- Cleaning 14
- Uploading new firmware 14
- Service and repairs 15

Safety information

WARNING!

Read the safety precautions in this manual before installing, powering, operating or servicing this product.

The following symbols are used to identify important safety information on the product and in this manual:

Warning!	**Warning!**	**Warning!**	**Warning!**	**Warning!**		**Warning!**
Safety hazard. Risk of severe injury or death.	***Hazardous voltage. Risk of lethal or severe electric shock.***	***Fire hazard.***	***Burn hazard. Hot surface. Do not touch.***	***Intense light emission.***		***See user documentation.***

Warning! Risk Group 3 product according to EN 62471 and Risk Group 2 product according to EN 62471, IEC/TR 62778 (see “Protection from eye injury” on page 7 for full details). Possibly hazardous radiation emitted from this product. May be harmful to the eyes. Do not stare directly into the light output from the product. Position the product so that prolonged staring into the product at a distance closer than 9 m (29.6 ft.) is not expected. Do not view the light output with optical instruments or any device that may concentrate the beam.

This lighting fixture presents risks of severe injury or death due to fire and burn hazards, electric shock and falls if the safety precautions in this manual are not followed.

Only qualified technicians are permitted to open the fixture. Users may carry out external cleaning as described in this manual, following the warnings and instructions provided, but any service operation not described in this manual or in the fixture’s User Manual must be referred to an authorized Martin service technician.

Read this manual before installing, powering, operating or servicing the fixture. Follow the safety precautions and observe all warnings in this Safety and Installation Manual, in the fixture’s User Manual, and printed on the fixture.

The ERA 700 Performance IP is for professional use as a stage light only. It is not for household or general lighting applications. Respect all locally applicable laws, codes and regulations when installing, powering, operating or servicing the fixture.

The light source contained in this fixture must be replaced by Martin® Service or an authorized Martin Service partner only.

Install, operate and service Martin products only as directed in their user documentation, or you may create a safety hazard or cause damage that is not covered by product warranties.

The latest versions of this Safety and Installation Manual and the fixture’s User Manual are available for download from the ERA 700 Performance IP area of the Martin website at www.martin.com. Before you install, operate or service the fixture, check the Martin website and make sure that you have the latest user documentation for the fixture. Document revisions are indicated at the bottom of page 2.

Technical Support

If you have questions about how to install or operate the fixture safely, please contact Harman Professional Technical support:

- For technical support in North America, please contact
  HProTechSupportUSA@harman.com
  Phone: (844) 776-4899
- For technical support outside North America, please contact your national distributor.

Protection from electric shock

The ERA 700 Performance IP has an ingress protection rating of:

- IP66 if the anti-tamper box is installed on the connections panel with the cable openings facing downwards, and
- IP65 without the anti-tamper box.

To achieve an IP66 rating, keep the fixture's anti-tamper box installed over the connections panel with the cable openings in the anti-tamper box facing downwards at all times. Remove the box only temporarily for access to the connectors during installation or maintenance work.

The fixture can withstand rain, splashing water, condensation etc. The fixture is designed to be used under any weather conditions, but do not expose it to an artificially high volume of water (in a fountain, waterfall or shower, for example). Do not immerse it. Do not expose it to high-pressure water jets. Isolate the fixture from power immediately if extreme conditions such as flooding arise.

The fixture is rated IP65/IP66 only when connectors with a corresponding IP rating are used on cables connected to the fixture.

Use only connectors and cables that are suitable for the installation environment and application with respect to humidity, water and sunlight resistance.

The power and data connectors are fitted with rubber caps to protect from water ingress. Keep rubber caps installed at all times on all connectors that are not in use.

Arrange cables so that they arrive at connectors from below. Create a 'drip loop' if necessary (see drawing on right). With this arrangement, gravity will cause any condensation or water droplets to run away from connectors.

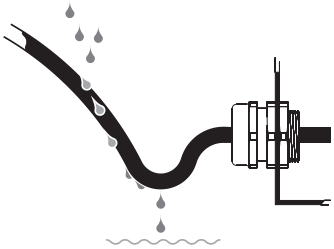

Drip loop

Support the weight of cable runs. Do not allow a length of cable to hang from a connector.

In wet locations, install the fixture with the connections panel facing downwards.

The fixture accepts AC mains power at 100-240 V~ (nominal), 50/60 Hz. Do not connect the fixture to mains power that is not within this range.

The fixture has a maximum total power consumption of 990 W.

The fixture draws a maximum total current of 11.1 A at 100-120 V~ and a maximum total current of 3.7 A at 200-240 V~.

The fixture draws a typical half-cycle RMS inrush current of 14.0 A for the first 10 milliseconds when mains power is first applied to the fixture at 230 V~, 50 Hz.

To connect the fixture to mains power, you must first obtain 12 AWG or 2.5 mm^2 power input cable that is 16 A rated and temperature-rated to suit the installation environment. In the USA and Canada, the cable must be UL-listed, type SJTW or equivalent. In the EU, the cables must be type H05VV-F or equivalent. Suitable cables with the correct connectors are available from Martin.

Ensure that the fixture is electrically connected to ground (earth) via the power input cable. Do not remove the protective coating on the housing or loosen screws to establish a separate ground (earth) connection from the fixture's chassis.

Use only a source of mains power that complies with local building and electrical codes and has both overload and ground-fault (earth-fault) protection.

Socket outlets or external power switches used to supply the fixture with power must be located near the fixture and easily accessible so that the fixture can easily be disconnected from power.

Disconnect the fixture from AC mains power before carrying out any installation, cleaning or maintenance work and when the fixture is not in use.

Isolate the fixture from power immediately if the power plug or any seal, cover, cable, or other component is damaged, defective, deformed, showing signs of water ingress or showing signs of overheating. Do not reapply power until repairs have been completed.

Before using the fixture, check that all power distribution equipment and cables are in perfect condition and rated for the electrical requirements of all connected devices.

Do not connect a device to power if its maximum current draw will exceed the electrical ratings of any cable or connector used in the chain.

Do not remove any cover from the fixture.

Do not cover, immerse or block the pressure equalization valve on the fixture's connections panel. Check the pressure equalization valve periodically. If it appears dirty it may be becoming blocked. Contact an authorized Martin service agent for possible replacement.

Do not use this equipment at an altitude of more than 2000 m (6570 ft.) above sea level.

Protection from burns and fire

Do not operate the fixture if the ambient temperature (T_a) exceeds 50° C (122° F). At this temperature, a thermal protection system shuts the fixture down automatically.

The surface of the fixture can reach up to 70° C (158° F) during operation. Avoid contact by persons and materials. Allow the fixture to cool for at least 15 minutes before handling.

Keep flammable materials well away from the fixture. Keep all combustible materials (e.g. fabric, wood, paper) at least 0.5 m (1.7 ft.) away from the fixture.

Ensure that there is free and unobstructed airflow around the fixture. Provide a minimum clearance of 0.5 m (1.7 ft.) around fans and air vents.

Do not use the fixture to illuminate surfaces within 2 m (6.6 ft.) of the fixture.

Do not stick filters, masks or other materials onto any optical component.

See drawing below. The fixture's lenses can focus the sun's rays inside the fixture, creating a risk of fire and damage. Do not expose the front of the fixture to sunlight or any other source of powerful light from any angle, even for a few seconds. Make sure that the head will be pointing away from the sun and from any other potential source of powerful light at all times, even when the fixture is not in use.

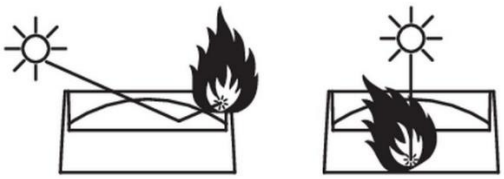

Protection from eye injury

This fixture corresponds to Risk Group 3 according to EN 62471 when all photobiological risks are considered and Risk Group 2 according to IEC/TR 62778 for blue light only. It emits possibly hazardous optical radiation. It falls into the Risk Group categories shown below according to EN 62471 and IEC/TR 62778 under worst-case conditions:

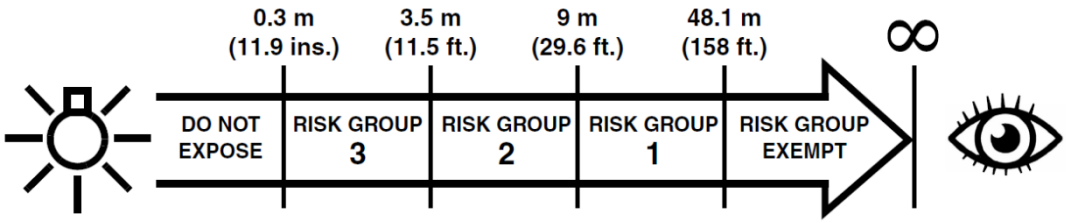

At a distance of less than 3.5 m (11.5 ft.) from the fixture, the light output can potentially cause eye or skin injury before an exposed person's natural aversion responses (blink reflex and reaction to skin discomfort) can protect them. At distances greater than 3.5 m (11.5 ft.), potential eye and skin injury hazards from the light output are normally prevented by natural aversion reflexes.

Position the fixture so that persons cannot be exposed to the fixture's light output at a distance of less than 3.5 m (11.5 ft.) from the fixture and so that prolonged staring into the light output at less than 9 m (29.6 ft.) is not expected.

Do not look directly into the fixture’s light output.

Do not look at the light output with magnifiers, telescopes, binoculars or similar optical instruments that may concentrate the light output.

Ensure that persons are not looking directly into the front of the fixture when the product lights up suddenly. This can happen when power is applied, when the product receives a DMX signal, or when certain control menu items are selected.

Disconnect the fixture from power at all times when the fixture is not in use.

Provide well-lit conditions to reduce the pupil diameter of anyone working on or near the fixture.

Protection from injury

The fixture weighs 39.7 kg (87.6 lbs.) not including rigging hardware.

When the fixture is in use, it must be either:

- fastened to a secure, stable structure such as a rigging truss, or
- standing on a stable horizontal surface where it will not present a danger of tripping or falling.

Install the fixture only as directed in this manual.

The fixture is not portable when installed.

Ensure that any supporting structure and/or hardware used can hold at least six (6) times the weight of all the devices they support.

Make sure that all supporting structures and rigging hardware items (including safety cables and fasteners) are in perfect condition, safely dimensioned, suitable for the installation environment and will be stable under all weather and temperature conditions.

If suspending from a rigging structure, fasten the fixture to a truss or similar support using two rigging clamps and omega brackets. Do not use safety cables as the primary means of support.

If the fixture is installed in a location where it may cause injury or damage if it falls, install as directed in this manual a secondary attachment such as a safety cable that will hold the fixture if a primary attachment fails. The secondary attachment must be approved by an official body such as TÜV as a safety attachment for the weight that it secures, must comply

with EN 60598-2-17 Section 17.6.6 and must be capable of bearing a static suspended load that is ten (10) times the weight of the fixture and all installed accessories.

If the safety cable attachment point becomes deformed, do not suspend the fixture. Have the fixture repaired by an authorized Martin service partner.

Allow enough clearance around the head to ensure that it cannot collide with an object or another fixture when it moves.

Check that all external covers and rigging hardware are securely fastened.

Block access below the work area and work from a stable platform whenever installing, servicing or moving the fixture. Make sure that there is no risk of injury from falling parts, tools or other materials.

Do not operate the fixture with missing or damaged covers, shields or any optical component.

Do not lift or carry the fixture by its head. Support the fixture by its base only.

In the event of an operating problem, stop using the fixture immediately and disconnect it from power. Do not attempt to use a fixture that is obviously damaged.

Do not modify the fixture in any way not described in this manual or install other than genuine Martin parts.

Refer any service operation not described in this manual to Martin Service or an authorized Martin service partner.

Introduction

Thank you for selecting the ERA 700 Performance IP moving head lighting fixture from Martin®.

This Safety and Installation Manual is supplied with the fixture. It gives details of installing and servicing the fixture as well as connecting to mains power. The ERA 700 Performance IP User Manual, containing full instructions for connecting to control data, setting up, controlling and monitoring the fixture is available for download as one single document combined with this Safety Manual from the ERA 700 Performance IP area of the Martin website at www.martin.com. If you have any difficulty locating this document, please contact your Martin supplier for assistance.

Before installing, operating or servicing the ERA 700 Performance IP, please check the fixture's area of the Martin website at www.martin.com and make sure that you have the latest user documentation for the product.

Not all product specifications are included in the fixture's user documentation. You can find full specifications for the fixture in the ERA 700 Performance IP area of the Martin website. The online specifications include information to help you order accessories such as cables, flightcases etc.

The fixture is supplied with this Safety and Installation manual, an anti-tamper box to install over the connections panel, and two Martin omega brackets for fastening a rigging clamp to the fixture base.

Before using the product for the first time

1. Check the support pages on the Martin Professional website at www.martin.com for the most recent user documentation and technical specifications for the fixture. Martin user manual revisions are identified by the revision letter at the bottom of the inside cover.
2. Read 'Safety information' on page 3 before installing, operating or servicing the fixture.
3. Unpack and ensure that there is no transportation damage before using the fixture. Do not attempt to operate a damaged fixture.
4. Check that the voltage and frequency of the local power source match the mains power requirements of the fixture.
5. Either hard-wire the fixture's power input cable to an AC mains power source or install as described in this manual a power plug (cord cap) that is suitable for local power outlets on the power input cable and connect the cable to an AC mains power outlet. If you need to fabricate a power cable, use only the cable and connector specified in this manual.

Applying mains power

The fixture does not have an on/off switch. It becomes active as soon as AC mains power is applied at the power input connector. Be prepared for the head to move and for the fixture to suddenly emit bright light.

Each time power is applied to the fixture, it will reset all effects and functions to their home positions. A reset typically takes around 20 seconds.

Packing and unpacking

Allow the fixture to cool for 30 minutes before packing it for storage or transport in a flightcase or packaging. If the fixture is wet, we recommend that you dry it before packing to avoid moisture affecting protective packaging and potentially causing mold.

If you move the fixture from a cold to a warm environment, remove it from its flightcase or packaging and give it at least two hours to acclimatize before you apply power. This will help to avoid damage due to internal condensation. If condensation is still visible inside the front glass, run the fixture's dehumidification function using the service menu. Note that you can also set the fixture to run the dehumidification function automatically.

Shocks during transport can damage the tilt lock of a moving head fixture. Release the fixture's tilt lock and make sure that the head will be supported by a flightcase insert or packaging before storing or transporting the fixture.

Fixture overview

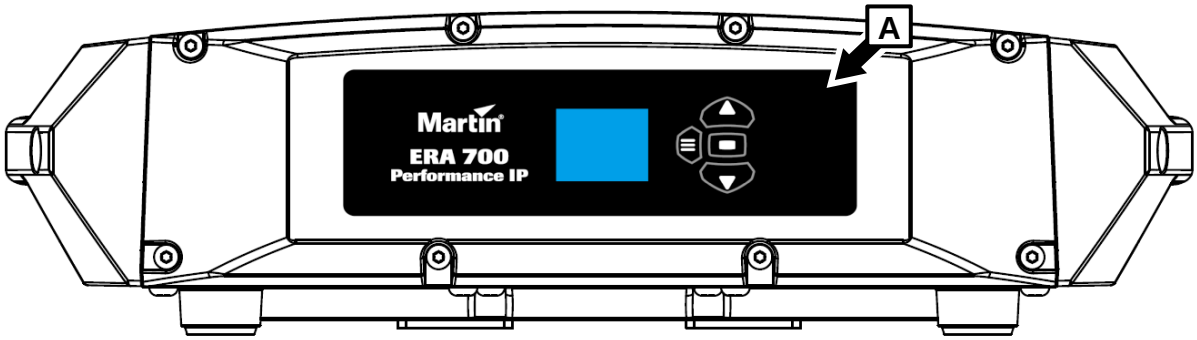

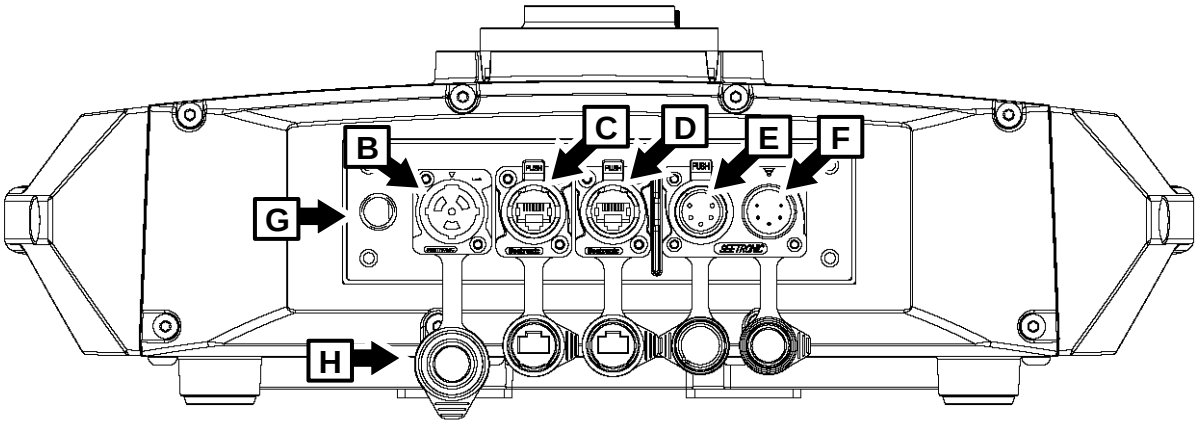

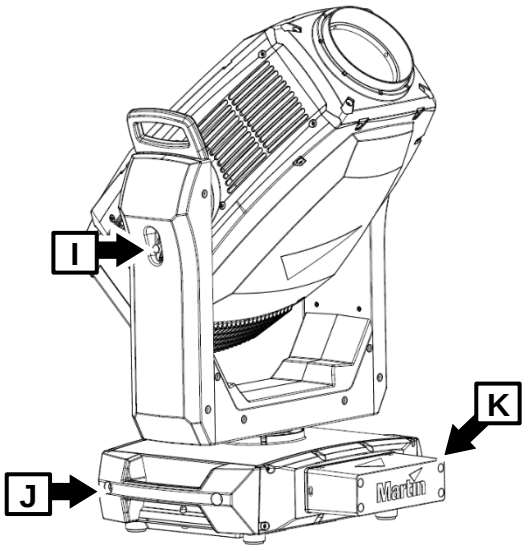

A – Control panel

B – AC mains power input (accepts Neutrik powerCON TRUE1 TOP or compatible)

C – Control data Ethernet port in/out

D – Control data Ethernet port in/out

E – DMX data input (5-pin locking male XLR)

F – DMX data thru / output (5-pin locking female XLR)

G – Pressure equalization valve

H – Connector sealing caps (must be installed on all unused connectors)

I – Tilt lock

J – Carrying handle

K – Anti-tamper box

Physical installation

Warning! Read ‘Safety information’ on page 4 before installing the fixture.

To avoid head collisions when installing ERA 700 Performance IP fixtures next to each other, allow a minimum center-to-center distance between fixtures of 590 mm (23.3 inches).

Martin can supply installation hardware such as rigging clamps and safety cables that are suitable for use with the fixture (see the product specifications on the ERA 700 Performance IP product page on the Martin website at www.martin.com).

We recommend that you keep the fixture’s anti-tamper box installed over the connections panel, especially in permanent installations, to prevent against accidental or unintended removal of connectors.

Installation location

The ERA 700 Performance IP is designed for permanent or temporary indoor or outdoor use. It can withstand rain and splashing water, but do not allow it to become immersed in water.

Fasten the fixture to a secure structure or surface or stand it on a surface where it cannot be moved or fall over. If you install the fixture in a location where it may cause injury or damage if it falls, secure it as directed in this manual using a securely anchored safety cable that will hold the fixture if the primary fastening method fails.

Avoiding damage from other light sources

Do not point the light output from other lighting fixtures at the ERA 700 Performance IP, as powerful light can damage the display.

Standing the fixture on a flat surface

The fixture can be placed on a hard, fixed, flat horizontal surface provided that there is no risk that it may cause an obstruction or be knocked over. Ensure that the surface can support at least six (6) times the weight of all items that it will support.

If you install the fixture in a location where it may cause injury or damage if it falls, secure it as directed in this chapter with a securely anchored safety cable.

Mounting the fixture on a truss

The fixture can be clamped to a truss or similar rigging structure in any orientation. Use a half-coupler type clamp (see illustration on right) that completely encircles the truss chord or tubular support.

If installing the fixture outdoors, install the anti-tamper box over the fixture’s connections panel so that the openings in the box face downwards. Ensure that cables arrive from below the fixture, creating ‘drip loops’ in cables if necessary.

Half-coupler clamp

To clamp the fixture to a truss:

1. Check that the rigging structure can support at least six times (or more if required by local regulations) the weight of all fixtures and equipment to be installed on it.
2. Block access under the work area.
3. The fixture is supplied with two omega-type brackets. Bolt two half-coupler type rigging clamps that are in perfect condition and approved for the weight that each clamp will support securely to the two brackets. Use M12, grade 8.8 steel minimum bolts with self-locking nuts.
4. Fasten the omega brackets to the base of the fixture by locking the bracket’s quarter-turn fasteners into the receptacles (see **B** in illustration on next page) in the base of the fixture. Turn quarter-turn fasteners a full 90° to lock them as shown on right.

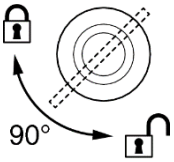

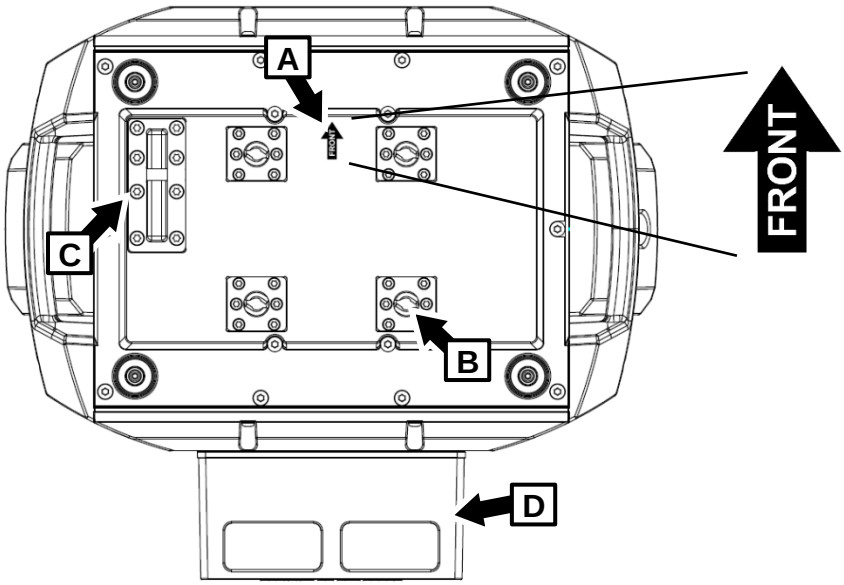

5. Note the position of the arrow marked **FRONT** (see **A** in illustration above). Working from a stable platform, hang the fixture on the truss and fasten the two rigging clamps onto the truss with FRONT pointing towards the main area to be illuminated.
6. If installing the fixture outdoors, make sure that the openings for cables in the anti-tamper box **D** face downwards.
7. Secure the fixture with a safety cable as directed below.
8. Check that the head will not collide with other fixtures or objects.

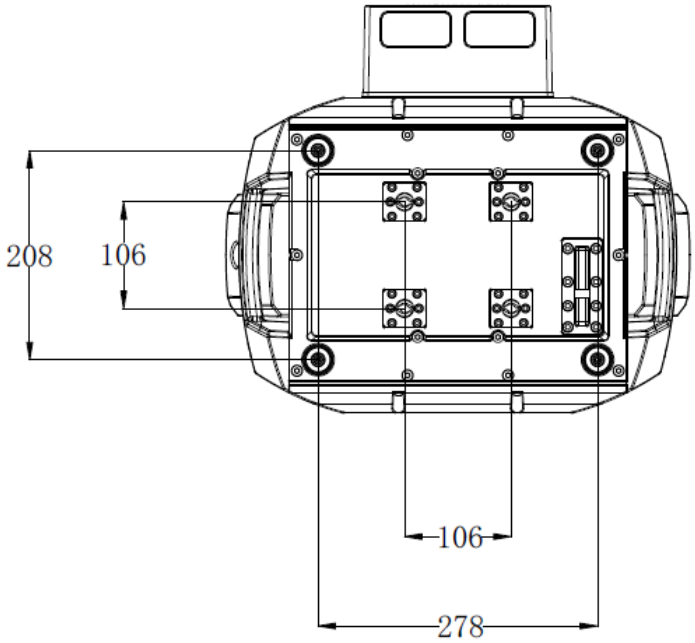

Securing with a safety cable

1. Obtain a safety cable (or other secondary attachment) that is approved for the weight of the fixture.
2. Fasten the cable to the safety cable attachment point in the base of the fixture (see **C** in illustration above) by either looping it around or fastening a carabiner clip to the attachment point **C**.
3. Remove as much slack as possible from the safety cable (by looping the cable around the truss chord, for example) and fasten it to a secure anchoring point.
4. Make sure that the safety cable will hold the fixture if a primary attachment fails.
5. Make sure that there is no possibility of the head colliding with other fixtures or objects when it moves through its full pan and tilt ranges,

AC mains power

Warning! Read ‘Safety information’ on page 4 before connecting the fixture to AC mains power.

The fixture has an auto-ranging power supply that accepts AC mains power at 100-240 V at 50/60 Hz. Do not apply AC mains power at any other voltage or frequency to the fixture.

The fixture’s maximum current draw is as follows:

• At 100-120 V~: 11.1 A

• At 200-240 V~: 3.7 A

Typical half-cycle RMS inrush current: 14.0 A at 230 V, 50 Hz.

Typical earth-leakage current: 0.43 mA.

The fixture requires a power input cable with an IP65-rated Neutrik powerCON TRUE1 NAC3FX-W (TOP) or equivalent female cable connector for AC mains power input. The cable must meet the requirements listed under “Protection from electric shock” on page 5. Martin can supply suitable input cables with connectors 1.5 m (4.9 ft.) or 5 m (16.4 ft.) long, as well as loose input connectors (see the Martin website at www.martin.com).

The fixture can be hard-wired to a building electrical installation if you want to install it permanently. Alternatively, you can connect it to local power outlets if you install a suitable power plug on the power input cable. When installing a power plug, follow the plug manufacturer’s instructions and connect the wires in the power cable following the color coding guide in the table below:

	Live or L	**Neutral or N**	**Earth, Ground or ⏚**
US system	Black	White	Green
EU system	Brown	Blue	Yellow/green

If you need to install a Neutrik powerCON TRUE1 (TOP) or equivalent IP65-rated connector on a power cable, follow the connector manufacturer’s instructions (normally published on the manufacturer’s website or included with the product), respecting the color coding guide above.

Connecting to power

Connect the fixture to AC mains power by lining up the keys in the IP65 power input cable connector with the keyways in the power input connector in the connections panel, inserting the connector and twisting clockwise. Twist the cable connector counterclockwise and remove it from the connections panel to disconnect.

The fixture does not have an on/off switch. It becomes active as soon as power is applied at the power input connector. Be prepared for the head to move suddenly and for the fixture to emit bright light as soon as power is applied.

Maintenance

Warning! Read ‘Safety information’ on page 4 before servicing the fixture.

Cleaning

Excessive dust, smoke fluid, and particle buildup degrades performance, causes overheating and will damage the fixture. Damage caused by inadequate cleaning or maintenance is not covered by the product warranty.

The cleaning of external optical lenses must be carried out periodically to optimize light output. Cleaning schedules for lighting fixtures vary greatly depending on the operating environment. It is therefore impossible to specify precise cleaning intervals for the fixture. Environmental factors that may result in a need for frequent cleaning include:

- Use of smoke or fog machines.
- High airflow rates (near air conditioning vents, for example).
- Presence of cigarette smoke.
- Airborne dust (from stage effects, building structures and fittings or the natural environment at outdoor events, for example).

If one or more of these factors is present, inspect fixtures within their first 100 hours of operation to see whether cleaning is necessary. Check again at frequent intervals. This procedure will allow you to assess cleaning requirements in your particular situation. If in doubt, consult your Martin dealer about a suitable maintenance schedule.

Use gentle pressure only when cleaning, and work in a clean, well-lit area. Do not use any product that contains solvents or abrasives, as these can cause surface damage.

To clean the fixture:

1. Disconnect the fixture from power and allow it to cool for at least 15 minutes.
2. Vacuum or gently blow away dust and loose particles from the outside of the fixture and the air vents at the back and sides of the head and in the base with low-pressure compressed air. Holding cooling fan blades stationary with a screwdriver will protect them from spinning too fast and possibly being damaged when you apply a vacuum or air jet.
3. Clean surfaces by wiping gently with a soft, clean lint-free cloth moistened with a weak detergent solution. Do not rub glass surfaces hard: lift particles off with a soft repeated press. Dry with a soft, clean, lint-free cloth or low-pressure compressed air. Remove stuck particles with an unscented tissue or cotton swab moistened with glass cleaner or distilled water.
4. Clean the pressure equalization valve on the back of the fixture by brushing gently with a soft brush. If the valve appears to be blocked, contact a Martin Service agent for replacement.
5. Dry the fixture before putting it into storage.

Uploading new firmware

Important! Do not switch the fixture off or disconnect the source of the firmware during an update, or the firmware will be corrupted.

You can check the currently installed firmware version in the INFORMATION menu. Firmware updates can be downloaded automatically from the Martin cloud using the Martin Companion software suite on a PC connected to the Internet.

Fixture information and settings are not affected when you upload new firmware to the fixture. All ERA 700 Performance IP fixtures that are powered on and connected via a DMX link to the fixture that you update will also have their firmware updated.

If you update firmware to a newer version, check the ERA 700 Performance IP area of www.martin.com to see whether an updated version of the fixture’s User Manual is available for the new firmware.

You need the following in order to install firmware:

- A Windows PC running the latest version of the Martin Companion software suite that is available for download from the Martin website at www.martin.com.
- The latest ERA 700 Performance IP firmware files (Martin Companion automatically downloads these from the Martin fixture firmware cloud when you run it on a PC that is connected to the Internet).
- A Martin Companion Cable USB-DMX hardware interface (available from your Martin supplier). Note that you can install new firmware in multiple fixtures at the same time using the Martin Companion Cable.

To install the ERA 700 Performance IP firmware using a Martin Companion Cable:

1. Apply power to the ERA 700 Performance IP fixture(s) and allow it to boot.
2. Connect the Martin Companion Cable's USB connector to a USB port on your PC. Connect the Martin Companion Cable's XLR connector to either the fixture's DMX IN connector or the DMX link.
3. Start the PC and launch Martin Companion. Check that the Martin Companion application correctly detects the Martin Companion Cable (a green dot should appear next to **USB Connected** in the top right-hand corner of the window).
4. Locate the latest ERA 700 Performance IP firmware in Martin Companion's **Firmware** window.
5. Start the firmware update by clicking **Update Firmware** in Martin Companion. Do not disconnect the Martin Companion Cable or power off the fixture(s) until the upload is complete and the fixture(s) has successfully rebooted.
6. If you are updating multiple fixtures over a DMX link, check that they have all rebooted correctly.

Service and repairs

There are no user-serviceable parts inside the fixture. Do not open the housing. The LED light source is not user-replaceable.

Refer any service or repair operation not described in this manual to an authorized Martin service technician. Do not try to carry out such an operation yourself, as doing so may present a health or safety risk. It may also cause damage or malfunction, and it may void your product warranty.

Installation, on-site service and maintenance can be provided worldwide by the Martin Professional Global Service organization and its approved agents, giving owners access to Martin's expertise and product knowledge in a partnership that will ensure the highest level of performance throughout the product's lifetime. Please contact your Martin supplier for details.

Specifications

For full product specifications, see the ERA 700 Performance IP area of the Martin website at www.martin.com

FCC Compliance

This equipment has been tested and found to comply with the limits for a Class B digital device, pursuant to part 15 of the FCC Rules. These limits are designed to provide reasonable protection against harmful interference when the equipment is operated in a commercial environment. This equipment generates, uses and can radiate radio frequency energy and, if not installed and used in accordance with the instructions, may cause harmful interference to radio communications. Operation of this equipment in a residential area is likely to cause harmful interference, in which case the user will be required to correct the interference at his own expense.

Supplier's Declaration of Conformity

Harman Professional, Inc. have issued an FCC Supplier's Declaration of Conformity for this product. The Declaration of Conformity is available for download from the ELP WW product area of the Martin website at www.martin.com.

Canadian Interference-Causing Equipment Regulations – Règlement sur le Matériel Brouilleur du Canada

This Class B digital apparatus meets all requirements of the Canadian Interference-Causing Equipment Regulations.*Cet appareil numérique de la classe B respecte toutes les exigences du Règlement sur le Matériel Brouilleur du Canada.*

CAN ICES-003 (B) / NMB-003 (B); CAN ICES-005 (B) / NMB-005 (B)

EU Declaration of Conformity

An EU Declaration of Conformity covering this product is available for download from the ERA 700 Performance IP product area of the Martin website at www.martin.com.

Disposing of the product

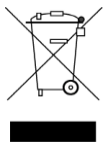

Martin products are supplied in compliance with Directive 2012/19/EC of the European Parliament and of the Council of the European Union on WEEE (Waste Electrical and Electronic Equipment), where applicable.

Help preserve the environment! Ensure that this product is recycled at the end of its life. Your supplier can give details of local arrangements for the disposal of Martin products

Martin® by HARMAN

www.martin.com