Exterior Wash Pro

S, M, L, XL – QUAD and CTC

Safety and Installation manual

Exterior Wash Pro XL QUAD

Exterior Wash Pro L QUAD

Exterior Wash Pro M QUAD

Exterior Wash Pro S QUAD

Exterior Wash Pro XL CTC

Exterior Wash Pro L CTC

Exterior Wash Pro M CTC

Exterior Wash Pro S CTC

Martin®

Dimensions

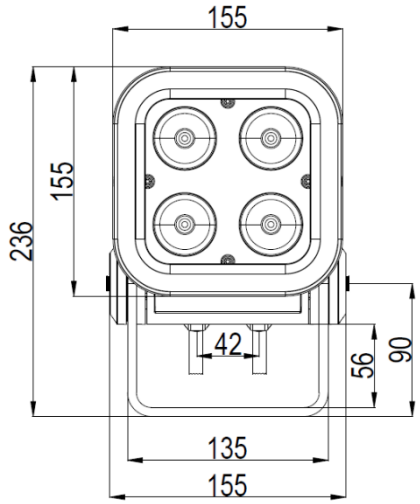

Exterior Wash Pro S

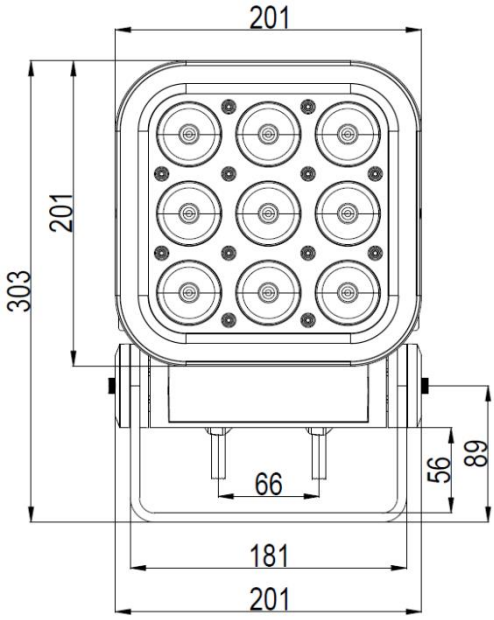

Exterior Wash Pro M

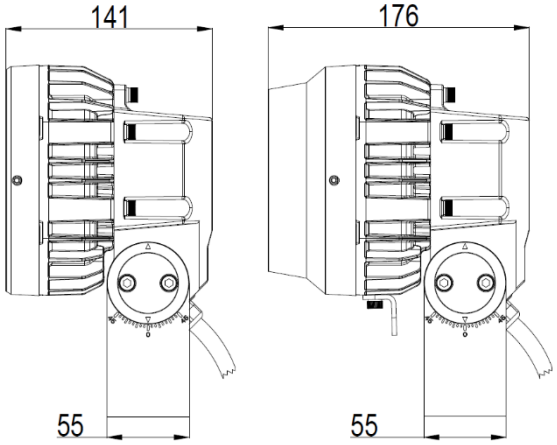

Exterior Wash Pro S with and without Baffle Snoot

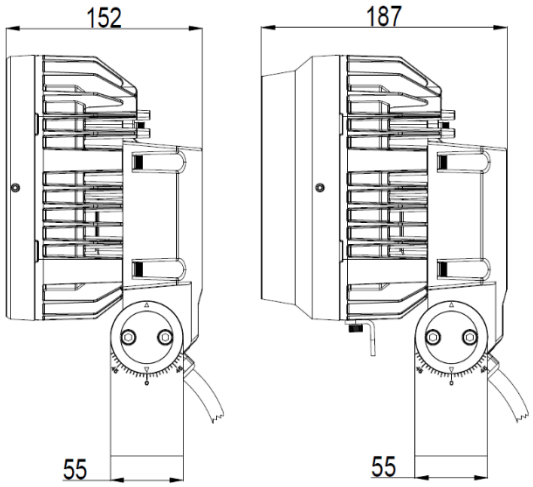

Exterior Wash Pro M with and without Baffle Snoot

©2023-2024 HARMAN PROFESSIONAL DENMARK ApS. All rights reserved. Features, specifications and appearance are subject to change without notice. HARMAN PROFESSIONAL DENMARK ApS and all affiliated companies disclaim liability for any injury, damage, direct or indirect loss, consequential or economic loss or any other loss occasioned by the use of, inability to use or reliance on the information contained in this document. Martin is a registered trademark of HARMAN PROFESSIONAL DENMARK ApS registered in the United States and/or other countries.

HARMAN PROFESSIONAL DENMARK ApS, Olof Palmes Allé 44, 8200 Aarhus N, Denmark
HARMAN PROFESSIONAL SOLUTIONS U.S., 8500 Balboa Blvd., Northridge CA 91329, USA

www.martin.com

Exterior Wash Pro family Safety and Installation Manual, English, Rev. C

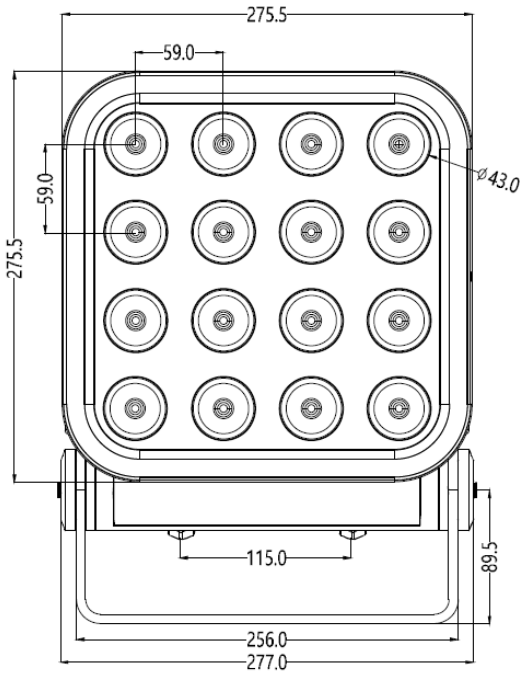

Exterior Wash Pro L

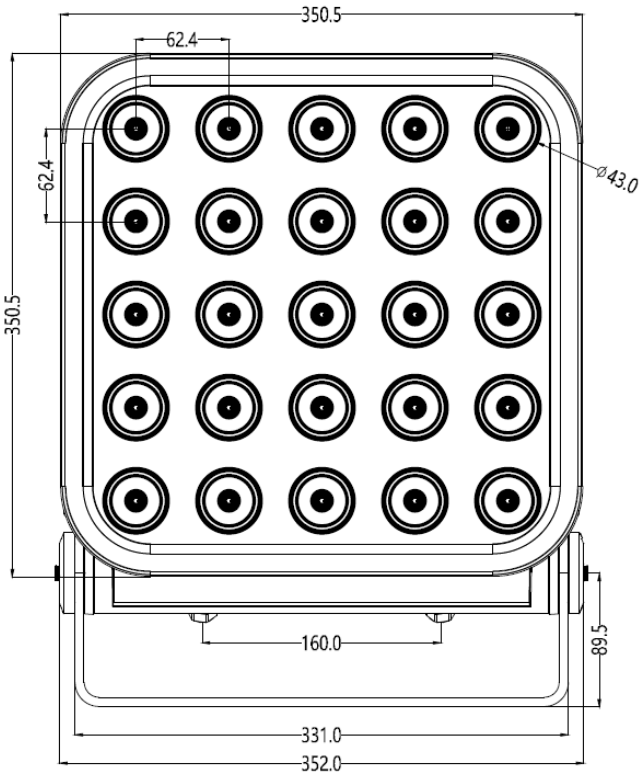

Exterior Wash Pro XL

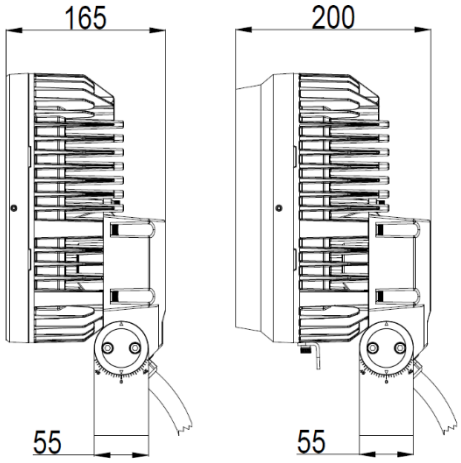

Exterior Wash Pro L with and without Baffle Snoot

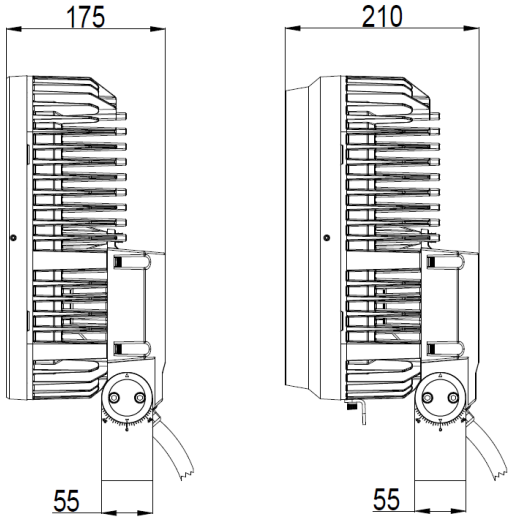

Exterior Wash Pro XL with and without Baffle Snoot

All dimensions are in millimeters.

Table of contents

Dimensions 2
Safety information 5
Introduction 10
    Accessories 10
    Before using the product for the first time 10
Physical installation 11
    Fixture location 11
    Mounting the fixture 11
    Securing with a safety cable 12
    Adjusting tilt 13
    Installing a microlens beam angle accessory 13
    Installing a Baffle Snoot 14
AC power 16
    Power characteristics 16
    Protecting connections from moisture 16
    Connecting to power 17
    Installing a temporary power plug 17
Connecting to control data 18
Testing 19
Maintenance 20
    Cleaning 20
    Pressure relief valve 20
    Firmware maintenance 21

Safety information

WARNING!

Read the safety precautions in this manual before installing, operating or servicing this product.

The following symbols are used to identify important safety information on the product and in this manual:

Warning!

Safety hazard. Risk of severe injury or death.

Warning!

Hazardous voltage. Risk of lethal or severe electric shock.

Warning!

Fire hazard.

Warning!

Burn hazard. Hot surface. Do not touch.

Warning!

Intense light emission.

Warning!

See user documentation.

Warning! Exterior Wash Pro QUAD and Exterior Wash Pro CTC lighting fixtures are Risk Group 2 products according to IEC/TR 62778 for blue light only (see full details later in this chapter). These fixtures produce intense light output that may be hazardous if suitable precautions are not taken. Do not view the light output with optical instruments or any device that may concentrate the beam. Do not stare into the light output. Eye injury may result.

This fixture presents risks of severe injury or death due to burn and fire hazards, electric shock and falls if the safety precautions in this manual are not followed.

Read this Safety and Installation Manual before installing, powering. operating or servicing the fixture. Follow the safety precautions and observe all warnings in this manual, in the fixture's User Manual, and printed on the fixture. Respect all locally applicable laws, codes and regulations.

The fixture is for professional use and must be installed by a qualified technician. It is not for household use.

The safety and suitability of lifting equipment, installation location, anchoring method, mounting hardware and electrical installation are the responsibility of the installer.

Users may carry out external cleaning and install microlens accessories and the Baffle Snoot available from Martin following the instructions and warnings given in this manual, but any service operation not described in this manual or in the fixture's User Manual must be referred to an authorized Martin service agent. The light source contained in the fixture may be replaced by Martin or an authorized Martin service agent only.

The fixture is suitable for mounting at any height, including less than 1.2 m (3.9 ft.) and more than 5 m (16.4 ft.) above ground or floor level.

Do not operate the fixture at an altitude of more than 2000 m (6570 ft.) above sea level.

Technical Support

If you have any questions about how to install or operate the fixture safely, please contact Harman Professional Technical support.

For technical support in N. America, please contact
HProTechSupportUSA@harman.com
Phone: (844) 776-4899

For technical support outside North America, please contact your national distributor.

Read this manual before installing, powering or servicing the fixture. Follow the safety precautions and observe all warnings in this manual and printed on the fixture.

The latest version of this manual is available for download from the Exterior Wash Pro pages of the Martin® website at www.martin.com. Before you install, operate or service an Exterior Wash Pro family fixture, check the Martin website and make sure that you have the latest user documentation for the fixture. Document revisions are indicated at the bottom of page 2.

Install, operate and service Martin products only as directed in their manuals, or you may create a safety hazard or cause damage that is not covered by product warranties. Keep this manual for future use.

Protection from electric shock

This fixture is IP66 rated. It is suitable for use in wet locations, but do not immerse it in water or install it in a location where it may become submerged. Ensure sufficient drainage to cope with the heaviest rainfall. Make sure that water can drain away from the installation area at least as fast as it can enter it.

Do not allow water to collect on or near the pressure equalization valve located on the rear of the fixture between the cable entries. Do not install a fixture with the valve membrane horizontal so that water can pool on it. Do not cover, immerse or block the valve. Check the valve periodically. If it appears dirty, it may be becoming blocked. Contact an authorized Martin service agent for possible replacement.

Arrange cables so that they arrive at connectors from below. Create a ‘drip loop’ if necessary. With this arrangement, gravity will cause any condensation or water droplets to run away from connectors.

Support the weight of cable runs. Do not allow a length of cable to hang from a cable gland or connector.

This fixture is a Class I product according to IEC 61140. Ensure that the fixture is electrically connected to ground (earth) via the fixture’s mains power cable.

The DMX and Ethernet transceivers of the fixture are isolated/SELV to prevent ground loops and for safety reasons.

This fixture accepts AC mains power within the ranges 100-120 V~ and 200-277 V~ nominal at 50 or 60 Hz only. Do not connect it to power at any other voltage or frequency.

Exterior Wash Pro QUAD and CTC fixtures have the following AC mains power characteristics:

- Exterior Wash Pro S
  - Maximum power consumption: 35 W
  - Maximum current draw: 0.35 A at 100-120 V~, 0.16 A at 200-240 V~
- Exterior Wash Pro M
  - Maximum power consumption: 75 W
  - Maximum current draw: 0.75 A at 100-120 V~, 0.35 A at 200-240 V~

- Exterior Wash Pro L
  - Maximum power consumption: 150 W
  - Maximum current draw: 1.5 A at 100-120 V~, 0.69 A at 200-240 V~
- Exterior Wash Pro XL
  - Maximum power consumption: 250 W
  - Maximum current draw: 2.5 A at 100-120 V~, 1.13 A at 200-240 V~

Use only a source of AC power that complies with local building and electrical codes and has both overload and ground-fault (earth-fault) protection.

Before using the fixture, check that all power distribution equipment and cables are in perfect condition, are rated for the current requirements of all connected devices, are protected to IP66 or higher and are of suitable type for the location (including water, pollution, temperature and UV resistance).Disconnect the fixture from AC power when not in use.

You may install micro lens accessories and install a Baffle Snoot as described in this manual, but do not open the fixture or remove any cover. Refer any service operation not described in this manual to an authorized Martin Service agent.

Shut down power to the entire installation at the main power distribution board and lock out power before carrying out any installation or maintenance work.

Isolate the fixture from power immediately if any seal, cover, cable, or other component is damaged, defective, deformed or showing signs of overheating. Do not reapply power until repairs have been completed.

Protection from burns and fire

Do not operate the fixture if the ambient temperature (Ta) exceeds 40° C (104° F). Above this temperature, the fixture regulates output to protect from overheating.

The surface of the product can become hot during operation. Avoid contact by persons and materials. Allow the fixture to cool for at least 10 minutes before handling.

Keep flammable materials well away from the fixture. Keep all combustible materials (e.g. fabric, wood, paper) at least 10 cm (4 in.) away from the front of the fixture.

Ensure that there is free and unobstructed airflow around the fixture.

Do not illuminate surfaces that are closer than the following minimum distances from the fixture:

- Exterior Wash Pro QUAD and CTC S, M and L: 10 cm (4 in.)
- Exterior Wash Pro QUAD and CTC XL: 40 cm (15.8 in.).

Do not attempt to bypass thermostatic switches or fuses.

Do not modify the fixture in any way not described in this manual or install other than genuine Martin® parts. Do not stick filters, masks or other materials onto any lens or other optical component. Use only accessories approved by Martin® to modify the light beam.

The fixture's optical components can focus the sun's rays, creating a risk of fire and damage. Do not expose the front of the fixture to sunlight or any other intense light source.

Protection from eye injury

Do not look directly into the product's light output.

Do not look at the light output with magnifiers, telescopes, binoculars or similar optical instruments that may concentrate the light output.

Ensure that persons are not looking directly into the front of the fixture when the product lights up suddenly. This can happen when power is applied, when the product receives a DMX signal, or when certain control menu items are selected.

Do not stare into the light output. Eye injury may result.

Disconnect the fixture from power at all times when the fixture is not in use.

Provide well-lit conditions to reduce the pupil diameter of anyone working on or near the fixture.

Wear protective glasses and other PPE (personal protective equipment) when working on or near the fixture.

Exterior Wash Pro fixtures emit possibly hazardous optical radiation. Exterior Wash Pro QUAD and CTC fixtures are Risk Group 2 products. See the diagrams and safety instructions given below for these fixtures. The Risk Group distances indicated apply to the light output from one fixture only. If fixtures can be operated in combination, light intensity can increase and you should consult a lighting professional for more appropriate safety recommendations.

Exterior Wash Pro QUAD

Exterior Wash Pro S, M, L and XL QUAD fixtures are classified Photobiological Risk Group 2 according to IEC/TR 62778 for blue light only. They fall into the Risk Group categories shown below according to IEC/TR 62778 under worst-case conditions:

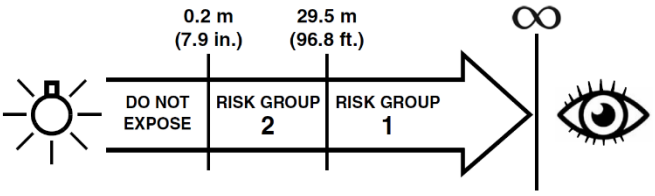

At a distance of less than 0.2 m (7.9 in.) from the fixture, the light output can potentially cause eye or skin injury before an exposed person's natural aversion responses (blink reflex and reaction to skin discomfort) can protect them. At distances greater than 0.2 m (7.9 in.), potential eye and skin injury hazards from the light output are normally prevented by natural aversion reflexes.

Position the Exterior Wash Pro QUAD so that persons cannot be exposed to the fixture's light output at less than 0.2 m (7.9 in.) from the fixture and so that prolonged staring into the light output at less than 29.5 m (96.8 ft.) from the fixture is not expected.

Exterior Wash Pro CTC

Exterior Wash Pro S, M, L and XL CTC fixtures are classified Photobiological Risk Group 2 according to IEC/TR 62778 for blue light only. They fall into the Risk Group categories shown below according to IEC/TR 62778 under worst-case conditions:

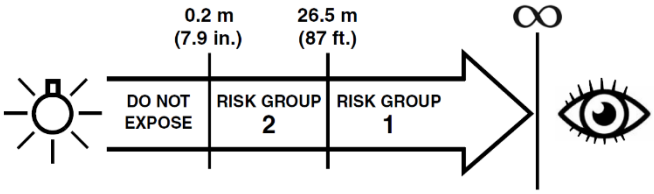

At a distance of less than 0.2 m (7.9 in.) from the fixture, the light output can potentially cause eye or skin injury before an exposed person's natural aversion responses (blink reflex and reaction to skin discomfort) can protect them. At distances greater than 0.2 m (7.9 in.), potential eye and skin injury hazards from the light output are normally prevented by natural aversion reflexes.

Position the Exterior Wash Pro CTC so that persons cannot be exposed to the fixture's light output at less than 0.2 m (7.9 in.) from the fixture and so that prolonged staring into the light output at less than 26.5 m (87 ft.) from the fixture is not expected.

Protection from injury

Fasten the fixture securely to a fixed surface or structure when in use. The fixture is not portable when installed.

To reduce the risk of strangulation, the flexible wiring connected to this fixture shall be effectively fixed to the wall if the wiring is within arm's reach.

Exterior Wash Pro QUAD and CTC fixtures have the following weights (mounting yoke included):

- Exterior Wash Pro S: 4.8 kg (10.6 lbs.)
- Exterior Wash Pro M: 7.4 kg (16.3 lbs.)
- Exterior Wash Pro L: 12.1 kg (26.7 lbs.)
- Exterior Wash Pro XL: 18.1 kg (39.9 lbs.)

Ensure that any supporting structure and/or hardware used can hold at least six (6) times (or more if required by local regulations) the weight of all the devices they support.

If suspending from a rigging structure, fasten the fixture to a rigging clamp. Do not use safety cables as the primary means of support. If the fixture is installed in a location where it may cause injury or damage if it falls, provide a secondary attachment such as a safety cable inserted through the secondary attachment point that will hold the fixture if a primary attachment fails. The secondary attachment must be approved by an official body such as TÜV as a safety attachment for the weight that it secures, must comply with DGUV 17 (BGV C1) or EN 60598-2-17 Section 17.6.6 and must be capable of bearing a static suspended load that is six (6) times (or more if required by local regulations) the weight of the fixture and all installed accessories.

The safety and suitability of lifting equipment, installation location, anchoring method, mounting hardware and electrical installation are the responsibility of the installer.

All fasteners used to mount fixtures must be suitable for the application, corrosion resistant and strong enough to mount the fixture safely.

Block access below the work area and work from a stable platform whenever installing, setting, adjusting, or cleaning the fixture.

After installation or service, check that the fixture and the trim frame or Baffle Snoot are securely fastened.

Do not operate the fixture with missing or damaged covers, shields or any optical component.

In the event of an operating problem, stop using the fixture immediately and disconnect it from power. Do not attempt to use a fixture that is obviously damaged.

The fixture's Effective Projected Area (EPA) is as follows:

	Fixture only	Fixture with Baffle Snoot
Exterior Wash Pro S	0.024 m²	0.038 m²
Exterior Wash Pro M	0.048 m²	0.072 m²
Exterior Wash Pro L	0.084 m²	0.120 m²
Exterior Wash Pro XL	0.144 m²	0.180 m²

Introduction

Thank you for selecting an Exterior Wash Pro lighting fixture from Martin®. This Safety and Installation Manual covers the following Exterior Wash Pro family lighting fixtures from Martin®:

- **Exterior Wash Pro QUAD S, M, L and XL** fixtures with premixed quad-color LEDs optimized for superior color mixing.
- **Exterior Wash Pro CTC S, M, L and XL** fixtures with mixable warm-white, medium white and cold-white LEDs that give white tones ranging in color temperature from 2400 K to 6500 K.

This Safety and Installation Manual is supplied with the fixture. It gives details of installing and servicing the fixture as well as connecting to mains power. The Exterior Wash Pro User Manual, containing full instructions for connecting to control data, setting up, controlling and monitoring the fixture, is available for download from the Exterior Wash Pro area of the Martin website at www.martin.com. If you have any difficulty locating this document, please contact your Martin supplier for assistance.

Before installing, operating or servicing an Exterior Wash Pro fixture, please check the fixture's area of the Martin website at www.martin.com and make sure that you have the latest user documentation for the product.

Not all product specifications are included in the fixture's user documentation. You can find full specifications for the fixture in the Exterior Wash Pro area of the Martin website. The online specifications include information to help you order accessories such as cables, flightcases etc.

Each fixture is supplied with this safety and installation manual. The fixture is prepared for hard wiring with 2 m (6.5 ft.) cable tails for power and data connection inside sealed junction boxes, preferably filled with potting compound.

Accessories

Narrow, Medium, Wide, Very Wide and Asymmetric beam angle micro lens accessories are available from Martin. A Baffle Snoot accessory that limits light spill and integrates with the fixture's design is also available. These accessories are designed to mount quickly on the front of the fixture. See the Exterior Wash Pro pages on the Martin website at www.martin.com for details and ordering information.

A safety cable attachment bracket is also available as an accessory.

Before using the product for the first time

1. Read 'Safety information' on page 5 before installing, operating or servicing the fixture.
2. Unpack the fixture. Please make sure to recycle cardboard packaging material. Both the inner layer (buffer) and the outer box are 100% cardboard.
3. Ensure that there is no transportation damage before using the fixture. Do not attempt to operate a damaged fixture.
4. If testing and/or setting up the fixture before it is hard-wired to a mains supply, install a local power plug (not supplied) to the end of the supplied power cable.
5. Before operating, ensure that the voltage and frequency of the power supply match the power requirements of the fixture.
6. Check the support pages on the Martin Professional website at www.martin.com for the most recent user documentation and technical information about the fixture. Martin® manual revisions are identified by the revision letter at the bottom of the inside cover.

Physical installation

Warning! Read ‘Safety information’ on page 5 before installing the fixture.

Contact your Martin® supplier for assistance if you have any questions about how to install this product safely.

Fixture location

Exterior Wash Pro family fixtures are intended for outdoor use. With an IP66 rating, they are protected against dust, humidity and water and are able to withstand powerful water jets, but they are not submersible.

Mounting the fixture

The fixture and yoke can be mounted at any angle. The yoke allows the fixture to be manually panned and tilted for beam aiming adjustment.

The fixture and mounting bracket are manufactured in corrosion-resistant anodized aluminum. Avoid mounting the fixture in direct contact with other types of metal, as this can cause galvanic corrosion. When fastening to a dissimilar metal surface:

- Use an electrically insulating material (such as rubber or plastic) or coating between the mounting bracket and the other metal.
- Use a non-conductive coating such as Delta Seal on fasteners (screws, bolts, washers, etc.) where they come into contact with the mounting bracket.

The fixture’s mounting yoke base must be securely and safely anchored to a stable, static surface, pedestal, structural beam, rigging truss or other suitable support. Do not stand the fixture unanchored on a surface or leave it where it can be moved or fall over.

Mounting on a surface

To anchor the mounting yoke to a wall or other flat surface, use **at least three** high-strength corrosion-resistant fasteners that are safe for the application and the environment (recommended minimum properties: stainless steel A4-70 grade according to ISO 3506 or steel grade 8.8 according to ISO 898-1). Any nuts used must be self-locking. Install washers under all nuts and bolt heads. Make sure that there is a washer between each fastener and the yoke base.

To mount L and XL fixtures on a suitable surface:

1. See Figure 1. Pass a 12 mm (1/2 inch) shaft diameter bolt through the 13.5 mm hole in the center of the yoke base and fasten it finger-tight into the surface.

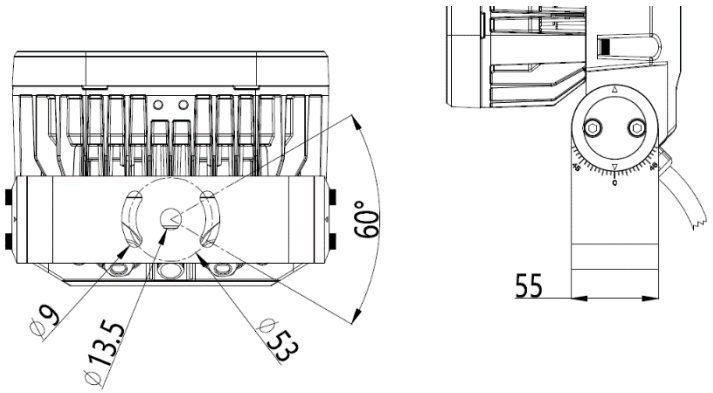

Figure 1. Mounting yoke base, S and M fixtures

2. Pass two bolts with 8 mm (5/16 inch) shaft diameter through the 9 mm curved slots and fasten them finger-tight into the mounting surface.
3. Adjust the aim of the fixture by turning it within the 60° of pan adjustment available, then fully tighten all three bolts. If additional fasteners are required to mount the fixture safely, pass two 8 mm (5/16 inch) shaft diameter bolts through the 9 mm curved slots in the yoke base and fasten them into the mounting surface.

To mount L and XL fixtures on a suitable surface:

1. See illustration below. Pass a 12 mm (1/2 inch) shaft diameter bolt through the 13.5 mm hole in the center of the yoke base and fasten it finger-tight into the surface.
2. Pass two bolts with 8 mm (5/16 inch) shaft diameter through the 9 mm curved slots and fasten them finger-tight into the mounting surface.
3. Adjust the aim of the fixture by turning it within the 60° of pan adjustment available, then fully tighten all three bolts.
4. If additional fasteners are required to mount the fixture safely, pass two 12 mm (1/2 inch) shaft diameter bolts through the 13.5 mm holes at the edges of the yoke base and tighten them into the mounting surface.

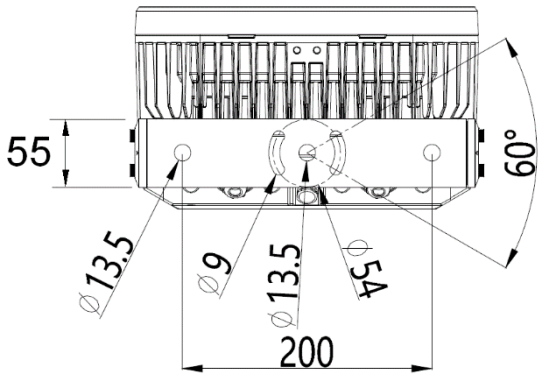

Figure 2. Mounting yoke base, L and XL fixtures

Securing with a safety cable

If regulations require it, the fixture can be secured with a safety cable that is approved for the weight of the fixture and mounting hardware.

To secure the fixture with a safety cable:

1. Obtain an Exterior Wash Pro Safety Cable Attachment Bracket from your Martin supplier. Fasten this bracket (arrowed) securely to the bottom of the fixture as shown in the illustration below using the screws supplied with the bracket.

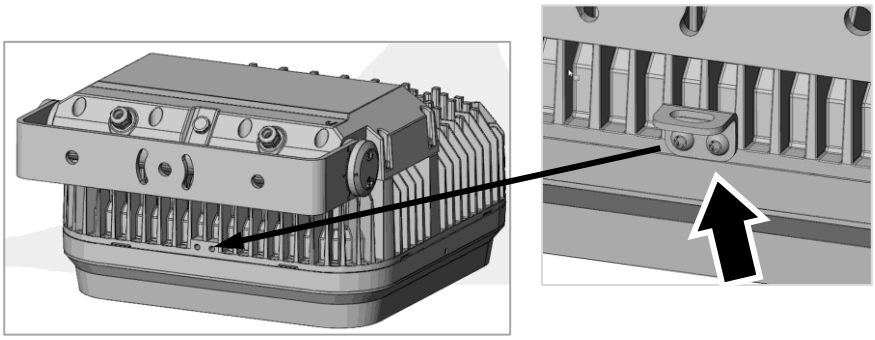

2. Fasten the safety cable to a secure anchoring point, by looping it around the truss chord, for example. Remove as much slack as possible from the safety cable by looping it more than once around the truss chord, for example. Then fasten the safety cable to the attachment bracket on the fixture with the cable's carabiner clip. Make sure that the cable will catch the fixture if a primary means of suspension fails.

Adjusting tilt

Warning! The fixture can become hot. Wear heat-resistant gloves if you adjust the aim of the fixture when it is (or has recently been) powered on.

Tilt adjustment can be carried out with the fixture powered on as follows:

1. Put on heat-resistant gloves.
2. See illustration on right. Loosen, but do not remove, the tilt lock screws (arrowed) on both sides of the yoke.
3. Tilt the fixture to the desired angle and retighten the screws. You can tilt the fixture up to 45° forward or 45° backward. A scale is printed on the yoke to ensure accurate adjustment.

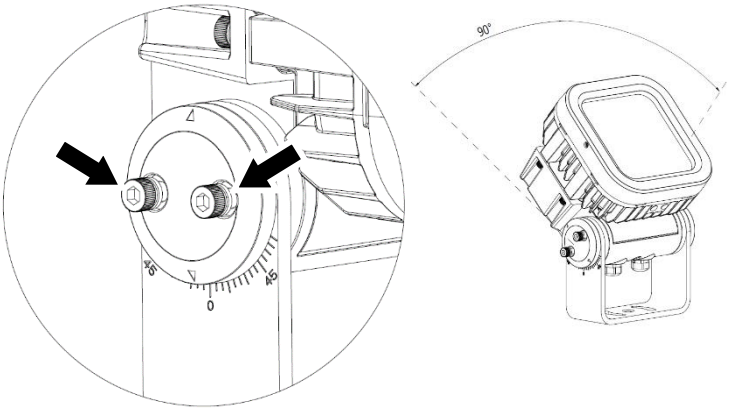

Figure 3. Tilt adjustment

Installing a microlens beam angle accessory

Optional microlenses that modify the beam angle are available from Martin (see the Exterior Wash Pro pages on the Martin website at www.martin.com for details and ordering information). The following options are available:

- Narrow (8°)
- Medium (15°)
- Wide (25°)
- Very Wide (50°)'
- Asymmetric (5 x 60°)

Note that the nominal beam angles given above are for reference only. The effective beam angle is a combination of the nominal microlens angle and the fixture beam angle defined by the lens.

Located close to the edge of the microlens is a marking that gives the microlens's nominal beam angle and indicates which side of the microlens must face outwards (see Figure 4). Note that the marking can be partially hidden under the microlens's silicone gasket.

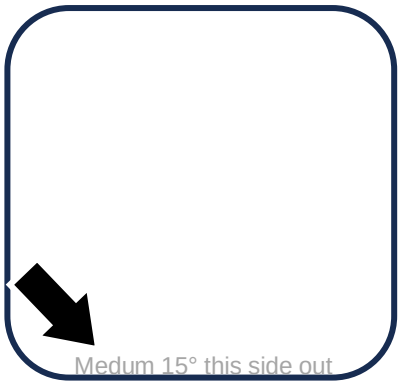

Figure 4. Microlens marking

The asymmetric microlens also includes markings with arrows and beam angles indicating the orientation of the microlens.

The microlens is held in place on the front of the fixture by the fixture's trim frame or, if installed, by a Baffle Snoot accessory.

To install an optional microlens:

1. Shut down power to the fixture and allow it to cool.

2. See **A** in Figure 5. Loosen the captive screws from both sides of the trim frame (or Baffle Snoot, if used) on the front of the fixture by pressing them in and turning them clockwise until they reach a stop.
3. See **B**. Using the Exterior Multitool available from Martin or a similar tool with no sharp edges, lever the trim frame carefully away from the fixture. Avoid damaging the fixture housing, seal or trim frame.
4. See **C**. Remove the screws from the filter holder on the front of the fixture and remove the filter holder (the number and positions of the screws varies depending on fixture).
5. See **D**. Position the microlens (arrowed) in the recess provided for it in the front of the fixture, making sure that the marking '**This side out**' close to the edge of the microlens faces outwards, towards the front of the fixture. Re-install the filter holder, tightening the screws evenly. Make sure that the microlens remains in position while installing the filter holder.
6. Re-install the trim frame (or Baffle Snoot, if used) and fasten it in place with its two captive screws. Press each screw in and turn it counter-clockwise until it reaches a stop. Check that the trim frame is held securely.

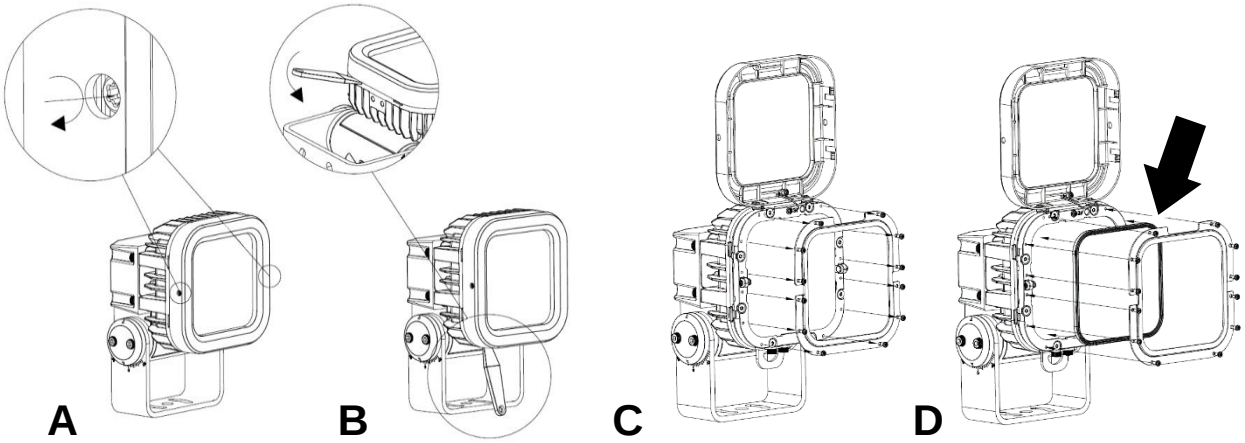

Figure 5. Microlens installation

In S, M and L fixtures, it is possible to use an asymmetric microlens to modify the orientation of the beam's wide/narrow configuration to angles other than 90° by ordering a microlens for the next size fixture up and cutting it to shape with the microlens at an angle.

Installing a Baffle Snoot

The optional Baffle Snoot accessory for Exterior Wash Pro fixtures may be installed with or without a microlens (see previous page).

To install a Baffle Snoot accessory:

1. Shut down power to the fixture and allow it to cool.
2. Refer to the illustration on the next page. See **A**. Loosen the two captive screws (arrowed) in the sides of the trim frame on the front of the fixture by pressing them n and turning them clockwise until they reach a stop.
3. See **B**. Using the Exterior Multitool available from Martin or a similar plastic tool with no sharp edges, lever the trim frame carefully away from the fixture. Avoid damaging the fixture housing, seal or trim frame.
4. See **C**. Lift the trim frame up as shown, remove the screw (arrowed) from the safety wire and release the wire from the trim frame. Set the trim frame aside for storage and possible future re-use.
5. See **D**. Hold the snoot up to the front of the fixture. Fasten the safety wire to the snoot re-using the safety wire's screw (arrowed).

6. See **E**. Place the snoot into position on the front of the fixture, lining it up carefully, and fasten it to the fixture with the two captive screws in the snoot. Press each screw in and turn it counter-clockwise until it reaches a stop. Check that the snoot is held securely.

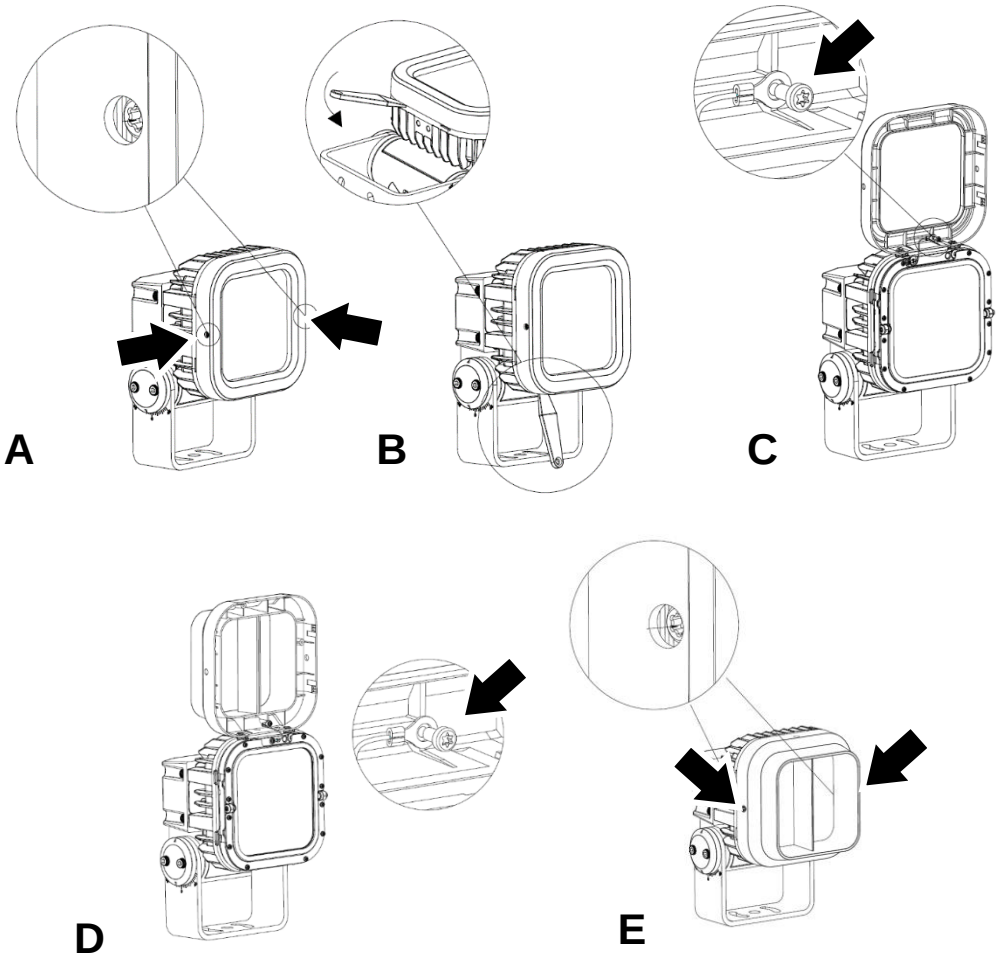

Figure 6. Installing a Baffle Snoot

AC power

Warning! Read “Safety Information” on page 5 before attempting to connect an Exterior Wash Pro fixture to power.

Exterior Wash Pro fixtures are supplied in EU and US models. Both models accept AC power at 100-240 V nominal or 277 V nominal at 50 or 60 Hz. Do not connect to power at any other voltage or frequency.

You can connect Exterior Wash Pro fixtures to either of the following mains power distribution systems:

- Single-phase (live, neutral, ground/earth) system.
- Grounded/earthed three-phase four-wire (three phases, neutral, ground/earth) system.

Do not try to connect a fixture to a three-phase three-wire (three phases, ground/earth) system.

There is no power on/off switch. Power is applied to an Exterior Wash Pro fixture as soon as it is connected to power. Provide a means to disconnect or shut down power to fixtures that is easily accessible and is located close to the fixtures.

Do not use an external dimming system to supply power to the fixture, as this may cause damage to the fixture that is not covered by the product warranty.

Power characteristics

The current draw, power consumption and power factor figures for Exterior Wash Pro fixtures are as follows:

Mains power	Exterior Wash Pro S	Exterior Wash Pro M	Exterior Wash Pro L	Exterior Wash Pro XL
100 V,60 Hz	0.35 A, 35 W, PF 0.99	0.75 A, 75 W, PF 0.99	1.5 A, 150 W, PF 0.99	2.5 A, 250 W, PF 0.99
120 V,60 Hz	0.29 A, 35 W, PF 0.99	0.63 A, 75 W, PF 0.99	1.26 A, 150 W, PF 0.99	2.1 A, 250 W, PF 0.99
230 V,50 Hz	0.16 A, 35 W, PF 0.94	0.35 A, 75 W, PF 0.94	0.69 A, 150 W, PF 0.95	1.13 A, 250 W, PF 0.96
277 V,50 Hz	0.14 A, 35 W, PF 0.90	0.30 A, 75 W, PF 0.90	0.60 A, 150 W, PF 0.91	0.98 A, 250 W, PF 0.92

**Power figures are typical, not maximum. Measurements made at nominal voltage. Allow for +/- 10% deviation.*
PF = Power factor. Allow for +/- 0.05 deviation.

Typical half-cycle RMS inrush current: 16.0 A at 230 V, 50 Hz.

Typical earth-leakage current: 0.5 mA.

Surge protection: 4 kV

Protecting connections from moisture

Moisture can cause corrosion in unprotected cable connections. Moisture can also be sucked along the inside of cables at breaks or cuts in the cable jacket (for example at connection points) and into fixtures because of the vacuum effect of temperature fluctuations inside fixtures. To protect connections and fixtures from moisture, take at least one of the following precautions:

- Locate cable junctions in dry areas (e.g. junction boxes in dry locations).
- Use connectors or junction boxes that are protected to IP67 or higher.
- Fill junction boxes with potting compound to seal the ends of cables and to protect connections from corrosion.

Connecting to power

The fixture is supplied with a 2 m (6.5 ft.) power cable tail installed ready for connection. See illustration below:

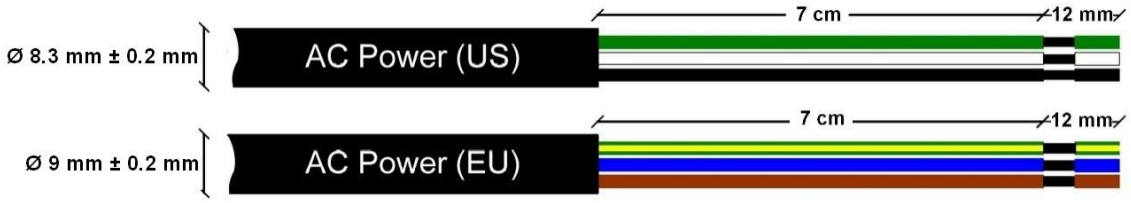

AC power cable details

To connect to a single-phase system or to one phase of a three-phase, four-wire system:

1. Lock out power to the installation.
2. Connect the conductors in the power cable to the distribution circuit inside a sealed junction box as follows:
   - Connect the green wire (US models) or yellow/green wire (EU models) to ground (earth).
   - Connect the white wire (US models) or blue wire (EU models) to neutral.
   - Connect the black wire (US models) or brown wire (EU models) to live (one phase).
3. Check that all installation work is completed and carry out appropriate tests and safety checks before applying power.

Installing a temporary power plug

If you install a power plug on the power cable for temporary use, install a grounding type (earthed) plug with integral cable grip that is rated minimum 277 V, 6 A. Follow the plug manufacturer's instructions and connect the wires in the power cable as shown in the following table:

	Live or L	**Neutral or N**	**Earth, Ground or ⏚**
US system	Black	White	Green
EU system	Brown	Blue	Yellow/green

Power plug connections

Connecting to control data

A DMX512 data link is required in order to control the fixture via DMX (and manage fixtures via RDM, if used). Your Martin® supplier will be happy to help if you need advice or assistance in planning the link.

Important! Protect all connections and all breaks in cable jackets from moisture (see ‘Protecting connections from moisture’ on page 16).

The fixture has a 2 m (6.5 ft.) cable tail with two pairs of data conductors and two shield wires for data connection. See below.

	Data Input pair (white sleeve)		Data output pair (black sleeve)		Shield (x 2)
Wire color	**Grey**	**White**	**Blue**	**Black**	**Black**
Signal	DMX IN -	DMX IN +	DMX OUT -	DMX OUT +	Common
Male XLR (if used)	Pin 2	Pin 3	-	-	Pin 1
Female XLR (if used)	-	-	Pin 2	Pin 3	Pin 1

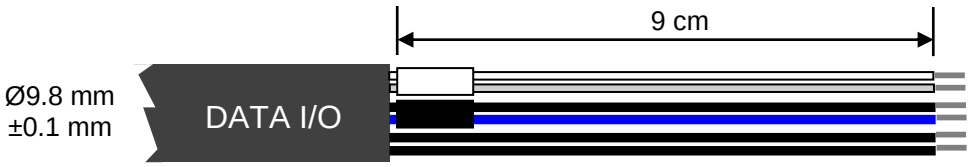

Data connections

Do not connect either of the shield conductors to ground (earth) or allow a shield conductor to come into contact with a connector shell, as this may cause interference.

You can connect the fixture’s data cable tails to a DMX/RDM data link using screw terminals, quick connectors or soldered joints in junction boxes or using XLR connectors that are suitable for the environment. Ensure that the fixture is protected from the entry of water via the data cable by using junction boxes or connectors that are protected to IP67 or higher. Fill junction boxes with potting compound.

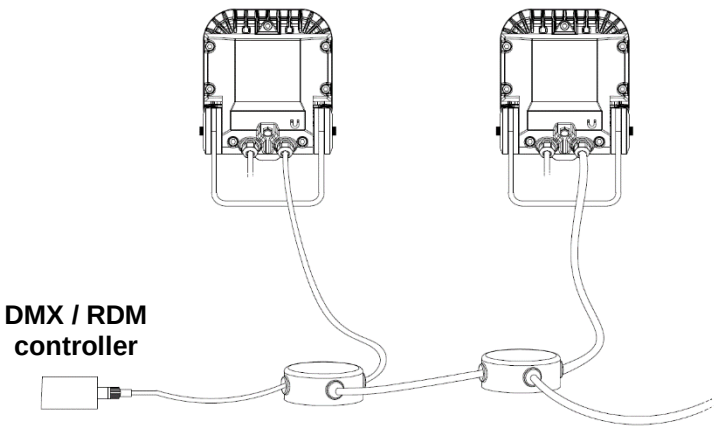

DMX data link layout

Testing

Exterior Wash Pro fixtures are programmed with a test sequence that is activated by ‘swiping’ (moving) a magnet past a magnetic switch inside the fixture. The magnetic switch is located on the rear of the fixture. A magnet icon is provided on the housing to show the switch location.

Exterior Wash Pro QUAD models

Swiping a magnet past the magnetic switch causes the fixture to step through the following sequence:

1. Display status code (see table below for meaning).
2. All LEDs at full intensity.
3. All red LEDs at full intensity.
4. All green LEDs at full intensity.
5. All blue LEDs at full intensity.
6. All white LEDs at full intensity.
7. Exit sequence and resume normal operation.

You can also resume normal operation by cycling power off and on. If you are sending a DMX signal to the fixture, it will exit the sequence and enter normal DMX operation again after a short period.

Fixture status is indicated as follows:

LED color	Signal	Status
Blue	Fast flash	Busy (booting or uploading SW)
Blue	Slow flash	No DMX detected
Green/blue	Alternating	Running normally in DMX mode

Exterior Wash Pro CTC models

Swiping a magnet past the magnetic switch causes the fixture to step through the following sequence:

1. Display status code (see table below for meaning).
2. All LEDs at full intensity.
3. All cold white LEDs at full intensity.
4. All medium white LEDs at full intensity.
5. All warm white LEDs at full intensity.
6. Exit sequence and resume normal operation.

You can also resume normal operation by cycling power off and on. If you are sending a DMX signal to the fixture, it will exit the sequence and enter normal DMX operation again after a short period.

Fixture status is indicated as follows.

LED color	Signal	Status
Cold	Fast flash	Busy (booting or uploading SW)
Cold	Slow flash	No DMX detected
Cold/warm	Alternating	Running normally in DMX mode

Maintenance

Warning! Read ‘Safety information’ on page 5 before carrying out service or maintenance. There are no user-serviceable parts inside. Do not open the housing. Refer any service operation not described in this manual to Martin Professional or its authorized service agents.

Installation, on-site service and maintenance can be provided worldwide by the Martin Professional Global Service organization and its approved agents, giving owners access to Martin’s expertise and product knowledge in a partnership that will ensure the highest level of performance throughout the product’s lifetime. Please contact your Martin® supplier for details.

Be aware that the output of LEDs, like all light sources, changes gradually over many thousands of hours of use. If you require products to perform to very precise color specifications, you may eventually need to make small readjustments at the lighting controller.

Cleaning

Regular cleaning is essential for fixture life and performance. Buildup of dust and dirt degrades the fixture’s light output and cooling ability.

Cleaning schedules will vary greatly depending on the operating environment. It is therefore impossible to specify precise cleaning intervals for the Exterior Wash Pro. Inspect fixtures within their first few weeks of operation to see whether cleaning is necessary. Check again at frequent intervals. This procedure will allow you to assess cleaning requirements in your particular situation. If in doubt, consult your Martin® dealer about a suitable maintenance schedule.

Do not use products that contain solvents, abrasives or caustic agents for cleaning, as they can cause surface damage to the fixture. The aluminum housing and front glass can be cleaned with mild detergents such as those for washing cars.

To clean the housing and front glass:

1. Isolate the fixture from AC power and allow the fixture to cool for 20 minutes.
2. Visually check that the silicone seals and the power and data cables are in good condition. If any seal or cable shows signs of damage, cracking or loss of water resistance, stop cleaning the fixture and contact a Martin authorized service technician for replacement.
3. If seals are in good condition, rinse off loose dirt with a hose or low-pressure water spray.
4. Wash the aluminum housing and front glass using warm water with a little mild detergent and a soft brush or sponge. Do not use abrasive cleaners.
5. Rinse with clean water and wipe dry.

Pressure relief valve

A valve with a permeable membrane between the cable entries on the back of the fixture (see illustration on right) equalizes pressure by allowing air to pass through it when the fixture heats up and cools down. At the same time, the valve acts as a barrier to water in liquid form. The expulsion of warm air (with a slightly higher water vapor content) and intake of cool air (with a slightly lower water vapor content) prevents humidity buildup over time, provided that the valve works correctly and that the fixture is correctly sealed.

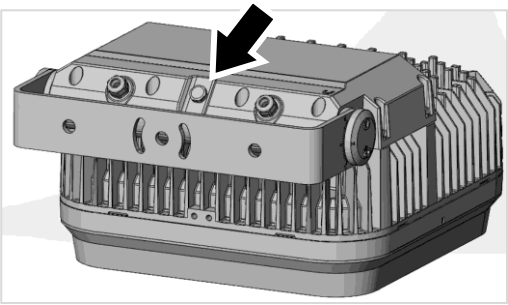

Pressure relief valves have a limited service life. They become blocked over time as the micropores in the membrane fill with particles. When a valve becomes blocked, excess pressure can damage seals or cause air and even water to be sucked into the fixture along cables. A blocked valve cannot be cleaned and must be replaced if it shows any signs of contamination or is not in perfect condition.

For maximum fixture service life, have the pressure relief valve replaced after an extended period of use or if it shows signs of dirt buildup. Intervals for valve replacement depend on the installation

environment. Please consult your Martin dealer about a suitable replacement schedule. If valve replacement becomes necessary, contact Martin Service for assistance.

Firmware maintenance

Important! Do not switch the fixture off or disconnect the source of the firmware during an update, or the firmware will be corrupted.

You may need to install new fixture firmware if a new firmware version with new features is released, or in the unlikely event that firmware has become corrupted. Firmware updates can be downloaded automatically from the Martin cloud using the Martin Companion software suite on a PC connected to the Internet.

All fixtures that are powered on and connected via a DMX link to the fixture that you update will also have their firmware updated.

If you update firmware to a newer version, check the Exterior Wash Pro area of www.martin.com to see whether an updated version of the User Manual is available for the new firmware.

You need the following in order to install firmware:

- A Windows PC running the latest version of the Martin Companion software suite that is available for download from the Martin website at www.martin.com.
- The latest Exterior Wash Pro firmware files (Martin Companion automatically downloads these from the Martin fixture firmware cloud when you run it on a PC that is connected to the Internet).
- A Martin Companion Cable USB-DMX hardware interface (available from your Martin supplier).

To install the firmware in a fixture (or in multiple fixtures on the DMX link) using a Martin Companion Cable:

1. Apply power to the fixture(s) and wait until the startup procedure has completed.
2. Connect the Martin Companion Cable's USB connector to a USB port on your PC. Connect the Martin Companion Cable's XLR connector to either the fixture's DMX IN connector or the DMX link.
3. Start the PC and launch Martin Companion. Check that the Martin Companion application correctly detects the Martin Companion Cable (a green dot should appear next to **USB Connected** in the top right-hand corner of the window).
4. Locate the latest Exterior Wash Pro firmware in Martin Companion's **Firmware** window.
5. Start the firmware update by clicking **Update Firmware** in Martin Companion. Do not disconnect the Martin Companion Cable or power off the fixture(s) until the upload is complete and the fixture(s) has successfully rebooted.
6. If you are updating multiple fixtures over a DMX link, check that they have all rebooted correctly.

Specifications

For full product specifications, see the Exterior Wash Pro area of the Martin website at www.martin.com.

FCC compliance

This equipment has been tested and found to comply with the limits for a Class B digital device, pursuant to part 15 of the FCC Rules. These limits are designed to provide reasonable protection against harmful interference in a residential installation. This equipment generates, uses and can radiate radio frequency energy and, if not installed and used in accordance with the instructions, may cause harmful interference to radio communications. However, there is no guarantee that interference will not occur in a particular installation. If this equipment does cause harmful interference to radio or television reception, which can be determined by turning the equipment off and on, the user is encouraged to try to correct the interference by one or more of the following measures:

- Reorient or relocate the receiving antenna.
- Increase the separation between the equipment and receiver.
- Connect the equipment into an outlet on a circuit different from that to which the receiver is connected.
- Consult the dealer or an experienced radio/TV technician for help.

FCC supplier's declaration of conformity declaration

This device complies with part 15 of the FCC Rules. Operation is subject to the following two conditions:

1. This device may not cause harmful interference, and
2. this device must accept any interference received, including interference that may cause undesired operation.

Canadian Interference-Causing Equipment Regulations – Règlement sur le Matériel Brouilleur du Canada

This Class B digital apparatus meets all requirements of the Canadian Interference-Causing Equipment Regulations.*Cet appareil numérique de la classe B respecte toutes les exigences du Règlement sur le Matériel Brouilleur du Canada.*

CAN ICES-003 (B) / NMB-003 (B); CAN ICES-005 (B) / NMB-005 (B)

EU Declaration of Conformity

An EU Declaration of Conformity covering this product is available for download from the Exterior Wash Pro area of the Martin website at www.martin.com.

Disposing of the product

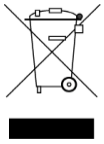

Martin products are supplied in compliance with Directive 2012/19/EC of the European Parliament and of the Council of the European Union on WEEE (Waste Electrical and Electronic Equipment), where applicable.

Help preserve the environment! Ensure that this product is recycled at the end of its life. Your supplier can give details of local arrangements for the disposal of Martin products

Martin®

www.martin.com