Exterior Wash Pro

S, M, L, XL – QUAD and CTC

User manual

with Safety and installation manual

Exterior Wash Pro XL QUAD

Exterior Wash Pro L QUAD

Exterior Wash Pro M QUAD

Exterior Wash Pro S QUAD

Exterior Wash Pro XL CTC

Exterior Wash Pro L CTC

Exterior Wash Pro M CTC

Exterior Wash Pro S CTC

Martin®

©2023-2024 HARMAN PROFESSIONAL DENMARK ApS. All rights reserved. Features, specifications and appearance are subject to change without notice. HARMAN PROFESSIONAL DENMARK ApS and all affiliated companies disclaim liability for any injury, damage, direct or indirect loss, consequential or economic loss or any other loss occasioned by the use of, inability to use or reliance on the information contained in this document. Martin is a registered trademark of HARMAN PROFESSIONAL DENMARK ApS registered in the United States and/or other countries.

HARMAN PROFESSIONAL DENMARK ApS, Olof Palmes Allé 44, 8200 Aarhus N, Denmark
HARMAN PROFESSIONAL SOLUTIONS U.S., 8500 Balboa Blvd., Northridge CA 91329, USA

www.martin.com

Exterior Wash Pro family User Manual English, Rev. D

Table of contents

Introduction 4
Exterior Wash Pro Series 4
Fixture overview 5
Before using the product for the first time 5
Setting up fixtures 6
Martin Companion® and RDM 6
Fixture discovery 6
Supported parameters 6
Setting up DMX operation 7
Setting DMX addresses 8
Dimming curves 8
QUAD fixture color temperature 9
Full and reduced power modes 9
Fixture information 9
Status messages 9
Utilities 9
Behavior when no DMX signal is present 10
Standalone operation 11
Synchronized standalone operation 11
Programming standalone operation 12
Running a standalone show 13
RDM parameter IDs 15
Operating the fixture 17
Test sequences and fixture status 17
Controlling via DMX 17
Identifying fixtures in the installation 17
DMX protocols 18
QUAD fixtures 18
CTC fixtures 19
Troubleshooting 20

Introduction

Warning! Before installing, operating or servicing the Exterior Wash Pro lighting fixture, read the latest version of the fixture's Safety and Installation Manual, paying particular attention to the Safety Precautions section.

Important! Full specifications for Exterior Wash Pro fixtures and accessories are available in the Exterior Wash Pro area of the Martin® website at www.martin.com.

Thank you for selecting the Exterior Wash Pro lighting fixture from Martin.

We recommend that you check the Martin website regularly for updated documentation.

Bear in mind that the output of LEDs, like all light sources, changes gradually over many thousands of hours of use. If you require products to perform to very precise color specifications, you may eventually need to make small readjustments at the lighting controller.

Exterior Wash Pro Series

The Exterior Wash Pro Series from Martin is a powerful, compact and energy-efficient line of LED lighting fixtures designed to illuminate structures and building facades. All models offer a wide selection of beam angles, and sealed construction suited to permanent outdoor use. A discreet baffle snoot that integrates seamlessly with the fixtures' sleek design is available as an optional accessory. The baffle snoot lets you limit light spill and aim the beam more directly at the target.

QUAD color mixing fixtures

Exterior Wash Pro QUAD variants feature four-color RGBW LEDs and offer RGB control with automatic addition of White. QUAD fixtures have a dedicated color temperature control channel which accurately follows the black body curve from 1000 K to 12 850 K.

Exterior Wash Pro QUAD fixtures are available in the following variants:

- **Pro S QUAD** – 4 x RGBW LEDs
- **Pro M QUAD** – 9 x RGBW LEDs
- **Pro L QUAD** – 16 x RGBW LEDs
- **Pro XL QUAD** – 25 x RGBW LEDs

CTC fixtures

Exterior Wash Pro Controllable Color Temperature (CTC) variants feature even higher white light quality and efficacy than QUAD variants. They offer White CT mixing from 2400 to 6500 K with 3 x discrete white color temperature LEDs for high efficacy.

Exterior Wash Pro CTC fixtures are available in the following variants:

- **Pro S CTC** – 3 x 2400 K, 3 x 4000 K, 3 x 6500 K white LEDs
- **Pro M CTC** – 5 x 2400 K, 5 x 4000 K, 6 x 6500 K white LEDs
- **Pro L CTC** – 12 x 2400 K, 12 x 4000 K, 12 x 6500 K white LEDs
- **Pro XL CTC** – 21 x 2400 K, 21 x 4000 K, 21 x 6500 K white LEDs

Fixture overview

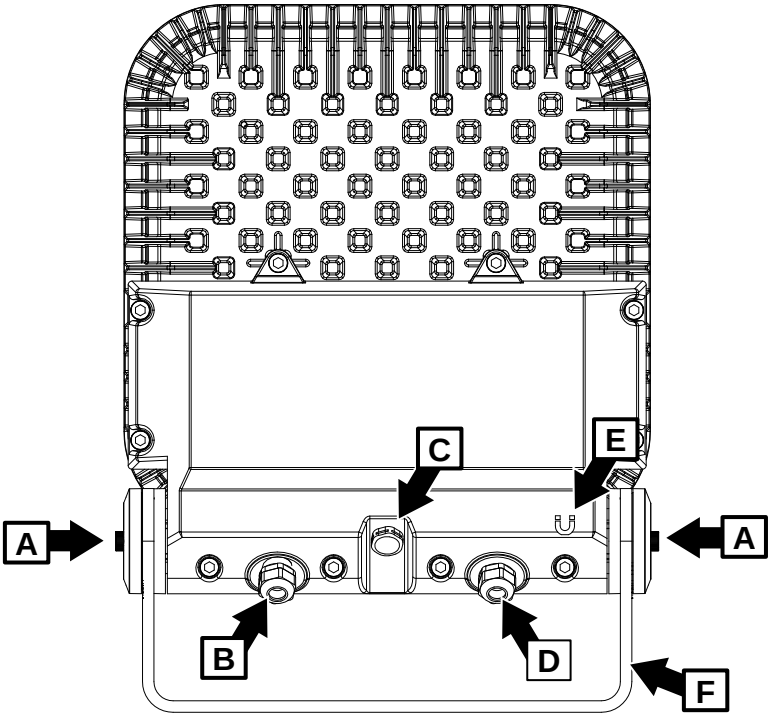

A Tilt adjustment/locking plates
B Data In/Out (fixture supplied with cable tail installed)
C Pressure relief valve
D AC mains power In (fixture supplied with cable tail installed)
E Magnetic ‘swipe’ switch
F Adjustable mounting yoke

Before using the product for the first time

1. Unpack and ensure that there is no transportation damage before using the fixture. Do not attempt to operate a damaged fixture.
2. Ensure that the voltage and frequency of the power supply match the power requirements of the fixture.
3. If testing and/or setting up the fixture before it is hard-wired to a mains supply, install a local power plug (not supplied) to the end of the supplied power cable.
4. If fixtures are exposed to a sudden temperature change, give them time to warm or cool to the ambient temperature before applying power. This will help avoid damage due to condensation.

Setting up fixtures

This chapter covers the use of Martin Companion to set up and manage the Exterior Wash Pro via RDM. While we recommend the use of Martin Companion, most of the commonly available RDM controllers also support the Exterior Wash Pro. Check with the controller manufacturer if you cannot find the Martin Exterior Wash Pro in the list of supported fixtures. The exact procedures and command names used by different RDM controllers vary.

Setting up single or multiple fixtures

You can set behavior in one fixture by sending a unicast RDM command to that one fixture only, or you can set behavior in all the fixtures on the data link by sending a broadcast RDM command to all the fixtures.

Martin Companion® and RDM

To set up Exterior Wash Pro fixtures via RDM, we invite you to use the **Martin Companion Cable** PC-to-DMX interface that is available as an accessory from Martin suppliers. This tool plugs into the USB port of a Windows PC and connects to Martin fixtures over the DMX data link.

The Martin Companion Cable is designed to work together with the **Martin Companion software suite** for Windows PCs that can be downloaded free of charge from the Martin website at. The Martin Companion software suite will always offer the latest Exterior Wash Pro features and firmware when your PC is connected to the Internet.

Instructions for connecting the Martin Companion Cable are supplied with the tool and can also be downloaded from the Martin website.

Martin Companion offers the following features:

- Simple PC-based user interface
- Update of fixture firmware
- RDM configuration and addressing
- Standalone show programming with automatic start when fixtures are powered on.

RDM functions

A full list of the RDM functions that Exterior Wash Pro fixtures support is given at the end of this chapter. These functions are generally referred to using the more specific term ‘PIDs’ or ‘Parameter IDs’.

Fixture discovery

Before you can communicate with fixtures using RDM, you must send a scan command (fixture discovery command) to all the devices on the data link so that the RDM controller can identify them. It does this by retrieving each device’s factory-set unique identifier (UID). This process can take some time, depending on the number of devices on the link.

To identify the fixtures on the link:

1. Check that the fixtures are correctly connected to the RDM controller on the data link and that power is applied to all fixtures.
2. Send a discovery command via RDM (Martin Companion does this automatically as soon as the cable is connected).
3. Give the controller time to identify the devices on the link and prepare for communication with the devices.

Supported parameters

Exterior Wash Pro fixtures can communicate the PIDs that they support to the RDM controller and give brief information on each PID.

Setting up DMX operation

Setting DMX mode

The DMX_PERSONALITY PID lets you set the DMX mode of fixtures on the data link. The different DMX modes available give you a range of options for color or color temperature control as well as dimming and strobe effects.

Because DMX mode affects the number of DMX channels a fixture uses, it will affect the assignment of DMX addresses to fixtures. You should therefore set the DMX mode of all the fixtures in the installation before you set their DMX addresses.

You can set the DMX mode of one fixture by sending a unicast RDM command to that one fixture only, or you can set the DMX mode of all the fixtures on the data link by sending a broadcast RDM command to all the devices on the link.

QUAD fixture DMX modes

Exterior Wash Pro QUAD fixtures can be set to one of four DMX control modes:

DMX control mode	Control options	Color calibration	DMX footprint	Color mode
Basic	RGB with White added automatically	Calibrated	3 x channels	Fixtures can be set to Calibrated or Calibrated Extended (default) via RDM
RGBW raw	RGBW	Uncalibrated	4 x channels	Fixtures are always in RAW mode
Standard (default mode)	Intensity (16-bit), RGB with White added automatically, CTC with color temperature variable from 1000 K to 12 850 K in 50 K steps	Calibrated	6 x channels	Fixtures can be set to Calibrated or Calibrated Extended (default) via RDM
Extended	Shutter/strobe effect, intensity (16-bit), RGB with White added automatically, CTC with color temperature variable from 1000 K to 12 850 K in 50 K steps	Calibrated	7 x channels	Fixtures can be set to Calibrated or Calibrated Extended (default) via RDM

The default color temperature of QUAD fixtures in Basic mode is 4000 K. This can be adjusted via RDM.

Since color in RGBW raw mode is not calibrated, slight differences in color and/or intensity between different fixtures may be visible in the light output from multiple fixtures, but you can obtain slightly higher light intensity levels.

QUAD fixture Color modes

Exterior Wash Pro QUAD fixtures have three color modes (also shown in table above).

In RGBW Raw DMX control mode, the color mode is always raw – you cannot select a calibrated color mode.

In Basic, Standard and Extended DMX control modes, you can select from two color modes via RDM:

- **Calibrated** – All colors stay consistent at all times.
- **Calibrated Extended** (default setting) – The White point is calibrated, but you can saturate colors to the maximum level available.

CTC fixture DMX modes

Exterior Wash Pro CTC fixtures can be set to one of two DMX control modes:

DMX mode	Control options	DMX footprint	Notes
Basic	Manual color temperature mixing (individual control of 2400 K, 4000 K and 6500 K LEDs)	3 x channels	Fixtures are always in RAW mode
Standard (default mode)	Intensity (16-bit), color temperature control from 2400 K to 6500 K by automatically mixing the three different LED types	3 x channels	Fixtures are always in RAW mode

Setting DMX addresses

This RDM command lets you set the DMX addresses of fixtures on the data link.

A fixture's DMX address is the first DMX channel it uses to receive data communication. It uses this channel and the channels immediately above it. If a fixture has DMX address 001 and the fixture uses four DMX channels, it will use channels 001, 002, 003 and 004. DMX address 005 will be available as a DMX address for the next fixture on the data link. If this fixture also uses four DMX channels, the next available DMX address will be 009, and so on.

You can set the DMX address of one fixture by sending a unicast RDM command to that one fixture only, or you can set all the fixtures on the data link to the same DMX address by sending a broadcast RDM command to all the devices on the link. If all the fixtures have the same DMX address, they will behave identically and you will not be able to control any single fixture independently.

An example procedure might look like this, depending on which RDM controller you use:

1. Go to Scan → Properties → Advanced → Choose PID → SET DMX START ADDRESS.
2. Enter the DMX address that you want to give to the fixture (or give to all the fixtures if you are sending a broadcast command).
3. Confirm your selection.

Dimming curves

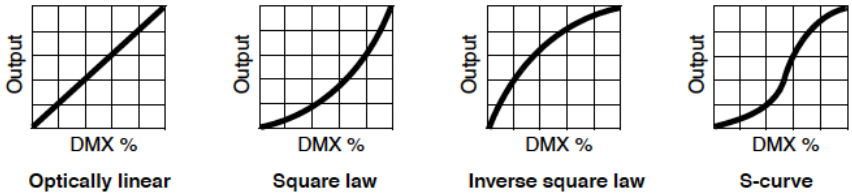

Four dimming curves are available via RDM:

- **Optically linear** – The increase in light intensity appears to be linear as DMX value is increased.
- **Square law** (default setting) – light intensity control is finer at low levels and coarser at high levels.
- **Inverse square law** – Light intensity control is coarser at low levels and finer at high levels.
- **S-Curve** – light intensity control is finer at low levels and high levels and coarser at medium levels.

QUAD fixture color temperature

The default color temperature of QUAD fixtures in Basic DMX mode is 4000 K. This can be adjusted using the MANUAL_CTC_VALUE PID.

Full and reduced power modes

You can set the maximum power consumption of Exterior Wash Pro fixtures via RDM. The power limit mode settings let you reduce electrical power consumption, which of course reduces maximum light intensity. The power settings are as follows:

	Exterior Wash Pro S	**Exterior Wash Pro M**	**Exterior Wash Pro L**	**Exterior Wash Pro XL**
Full mode	35W	75W	150W	250W
Reduced mode	28W	60W	120W	200W

Fixture information

Exterior Wash Pro fixtures can communicate the following information to the RDM controller:

- Basic fixture information – type of fixture.
- Name of product and manufacturer.
- Device label – This information can be edited by the user, providing a means of giving an individual fixture its own ID number, for example.
- Currently installed firmware version.
- LED PCB temperature.
- Number of hours fixture has had power applied since manufacture (non-resettable).
- Number of hours LEDs have been active since manufacture (non-resettable).
- Number of on/off power cycles since manufacture (non-resettable).
- Serial number – This is a factory-set serial number that cannot be changed.

Status messages

The Exterior Wash Pro features a self-diagnostic system that detects any issues concerning correct operation or safety (temperature that exceeds safe level, for example) and communicates the issues as status messages or warnings. These messages can be useful in connection with service and maintenance.

It is possible to do the following from within the RDM controller:

- Call up a list of any status messages that the fixture has stored in memory.
- View information on the messages.
- Clear the stored list of status messages.

Utilities

The Exterior Wash Pro offers various commands for managing the fixture:

- **Reset device** – Carries out a full reset of all the fixture's electronics.
- **Perform self-test** – The fixture carries out a sequence of functions designed to test the fixture.
- **Self-test description** – Lets you select from various sequences that test the fixture's functionality, the fixture's LEDs or every aspect of the fixture.
- **Factory defaults** – Deletes any custom settings that have been configured via RDM and returns the fixture to its factory default settings.

Behavior when no DMX signal is present

Using the RDM OFFLINE_MODE PID, you can define how fixtures behave if power is applied but fixtures are not receiving a DMX signal (or if fixtures are powered on and being controlled by DMX, and then the DMX signal stops).

Four options are available:

- **Blackout** (default setting) – Fixture intensity set to zero light output when no DMX signal is present.
- **Standalone** – Fixture goes to standalone operation when no DMX signal is present. If you have programmed a scene or scenes via RDM and DMX, the fixtures will display that scene when no DMX signal is present.
- **Hold Last State** – Fixture follows the last DMX values it received.
- **Full Output** – All LEDs go to 100% intensity when no DMX signal is present.

Standalone operation

Setting up standalone operation in the Exterior Wash Pro requires the use of Martin Companion. This hardware cable accessory and free software offers the following features:

- Simple PC-based user interface
- Programming from a remote location over the DMX link.
- Easy programming of multiple fixtures simultaneously
- Combining different types of Martin fixture in one standalone show
- Standalone show programming with possibility of automatic start when fixtures are powered on
- Programming of up to twenty scenes with global or individual fade and hold times.

In standalone mode, fixtures display a ‘scene’ (a ‘look’ in which its controllable effects can be deployed to varying degrees) or a sequence of up to twenty scenes if you use Martin Companion. Once scenes have been programmed, fixtures can display them without needing a DMX signal.

Synchronized standalone operation

In synchronized standalone operation, one fixture on the data link – the ’host’ fixture –sends ‘fade’ and ’wait’ signals to the other fixtures on the data link – the ’client’ fixtures – so that scene change times in client fixtures are synchronized with the scene change times in the host. Every time the host changes to its next pre-programmed scene, the client fixtures change to their next pre-programmed scene at the same time.

Important! *Martin Companion sets up host and client fixtures automatically. When you set up standalone operation in multiple fixtures, all the fixtures must be connected on the DMX/RDM link and powered on, and you must program all the fixtures at the same time. This will ensure that host and client roles are allocated correctly. If you try to set up fixtures individually using Martin Companion and then connect them to the DMX/RDM link afterwards, more than one fixture will try to be the host and fixtures will behave unpredictably.*

Setting up synchronized standalone operation

Note the following:

- Although scene changes in host and client fixtures all happen at the same time, scenes do not have to be identical. The host fixture only tells the client fixtures to “go to scene X with fade time Y”. The effects (intensity, color etc.) that each fixture uses in a specific scene are stored inside each fixture individually.
- Each fixture displays its own pre-programmed standalone show until it reaches its last scene, then it starts the show sequence again and continues in a loop. All fixtures will have the same number of scenes in their shows and they will all start and run their shows in synch (but as mentioned above, you can program different content for a scene in different fixtures).
- For best data signal quality, you should always terminate a DMX data link by connecting a 120 Ohm resistor across data hot and data cold at the end of the link. When you disconnect Martin Companion from the data link in order to begin standalone operation, we recommend that you also terminate the *beginning* of the link with a 120 Ohm resistor across data hot and data cold.
- Standalone operation is only possible if no DMX/RDM signal is present. If you connect a DMX signal to fixtures that are running a standalone show, they will stop standalone operation and respond to DMX control.

Programming standalone operation

To program standalone operation using Martin Companion:

1. Connect the fixtures to a DMX/RDM data link and apply power to the fixtures that you want to program. ***Important!*** *When using Martin Companion, all fixtures must be connected via a data link and powered on – you cannot program fixtures individually and connect them together to the link later!*
2. Connect the Martin Companion Cable and a PC running the Martin Companion application to the data link. If the fixtures have not already been discovered by Martin Companion, wait until the **Discovery** counter stops. This will indicate that all fixtures have been discovered.
3. Once all fixtures have been discovered and are shown in the list of connected fixtures in the main Martin Companion window, set each fixture to its desired DMX Mode in its **Mode** box (arrowed in screenshot below). The DMX mode that you set for a fixture determines what controls are available when you create scenes in the next steps.

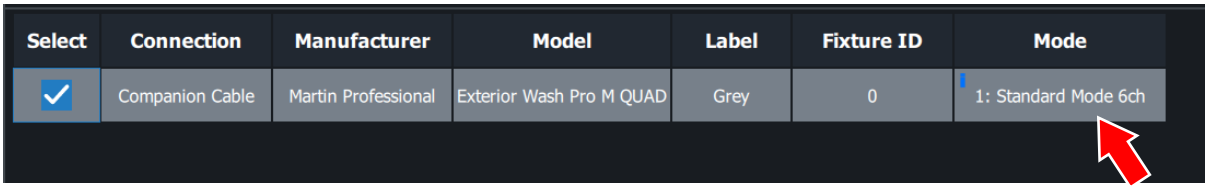

4. See screenshot below. Select the fixture or fixtures that you want to set up for stand-alone operation by checking each fixture's box under **Select** in the grey bar at the top of the window. Then click on **CREATE** under **ACTIONS** on the right of the window to continue to the next step (it is also possible to edit an existing show that has already been programmed into the fixtures).

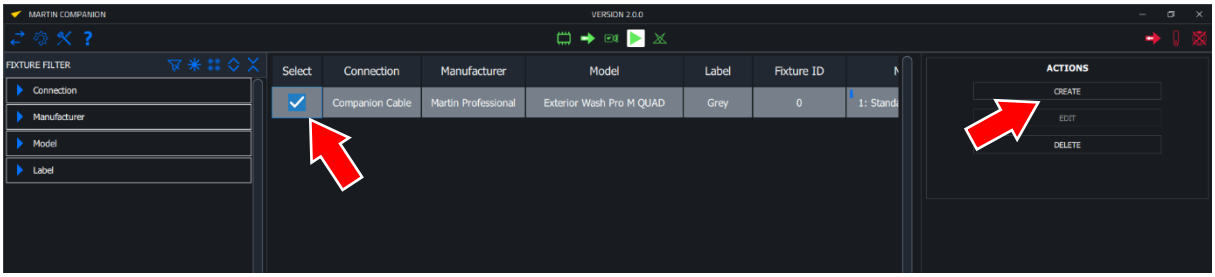

5. See screenshot on next page. To create the first scene:
   (a) Select the fixture (or fixtures that you want to control with identical behavior) in Scene 1 by checking each fixture's box under Select in the grey bar at the top of the screen.
   (b) Create the desired look for the selected fixture(s) in Scene 1 using the sliders on the left (the sliders shown depend on which DMX Mode you set for the fixtures in the previous step).
   (c) Select any other fixtures that you want to control with different behavior in Scene 1 by checking each fixture's box under Select in the grey bar at the top of the screen.
   (d) Create the desired look for these fixture(s) in Scene 1 using the sliders on the left.
   (e) Repeat the steps above until you are happy with the way all the fixtures in Scene 1 are set up.

(f) In the **SCENE TIMINGS** pane on the right, set **FADE** and **WAIT** times for Scene 1. The FADE time is the time it takes for one scene to fade to the next, and the WAIT time is the time that a scene will be displayed before it begins to fade to the next scene.

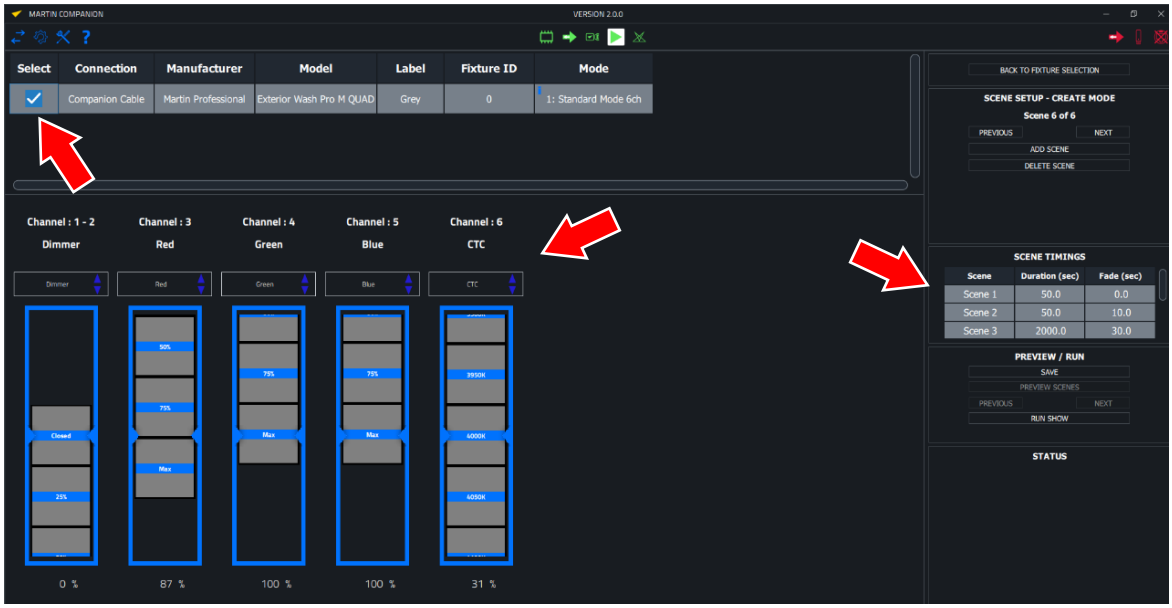

6. To create the next scene:
   (a) Click on **ADD SCENE**.
   (b) Repeat steps (a) to (d) under point 5. above to create the desired look for all the fixtures in scene 2.
   (c) Continue repeating steps (a) to (d) under point 5. to add more scenes.
7. If you want to preview scenes one by one, click on **PREVIEW SCENES** in the **PREVIEW/RUN** pane, then click on **PREVIOUS** and **NEXT** to scroll through the scenes.
8. When you have finished programming the standalone show, click on **SAVE** in the **PREVIEW/RUN** pane.

Running a standalone show

To run the standalone show that you have programmed:

1. See screenshot on right. Click on **RUN SHOW** in the **PREVIEW/RUN** pane.

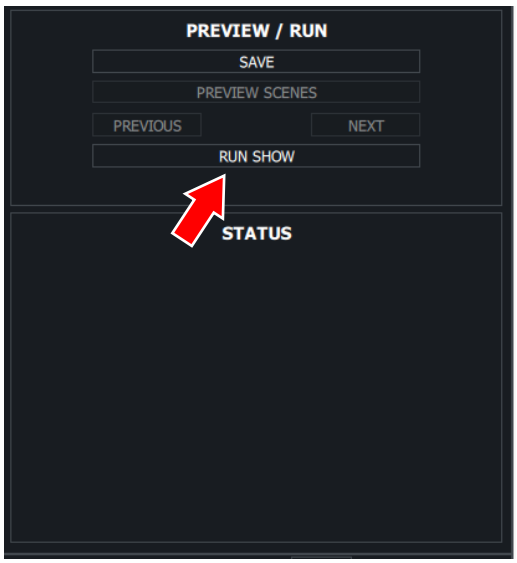

2. See screenshot on right. In the **STATUS** box, Martin Companion will now tell you to disconnect the Martin Companion Cable that is running from the PC to the fixtures. Once this cable is disconnected, the fixtures will start to run their standalone show.

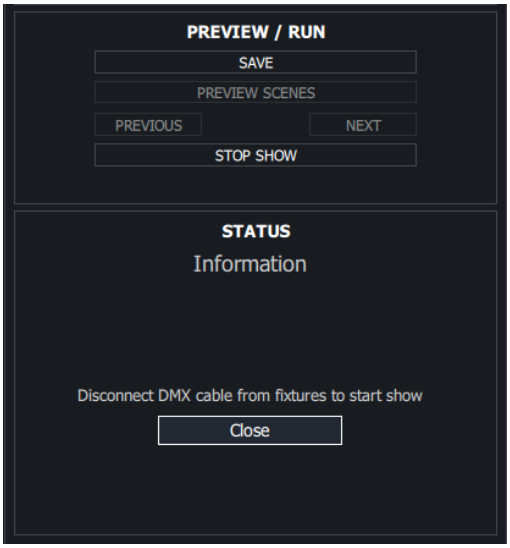

Fixtures will play the standalone show that has been programmed each time they are powered off and then powered on again, provided that they are not receiving a DMX signal. DMX control will override the standalone show for as long as the DMX signal is being received.

To stop fixtures from running their standalone show when they are powered on and not receiving a DMX signal, reconnect Martin Companion to the fixtures and click on **STOP SHOW** in the **PREVIEW/RUN** pane.

RDM parameter IDs

Exterior Wash Pro fixtures support the following RDM PIDs:

PID	Name	Description	GET	SET
Device discovery				
0x0001	DISC_UNIQUE_BRANCH	Fixture discovery	N/A	N/A
0x0002	DISC_MUTE	Fixture discovery	N/A	N/A
0x0003	DISC_UN_MUTE	Fixture discovery	N/A	N/A
Device information				
0x0060	DEVICE_INFO	Get basic fixture info	✓	
0x0080	DEVICE_MODEL_DESCRIPTION	Product Name	✓	
0x0081	MANUFACTURER_LABEL	Manufacturer Name	✓	
0x0082	DEVICE_LABEL	Info label (user-settable)	✓	✓
0x8003	FIXTURE_ID	Fixture number (user- settable)	✓	✓
0x8700	SERIAL_NUMBER	Fixture serial number	✓	
0x00C0	SOFTWARE_VERSION_LABEL	Firmware version	✓	
0x0200	SENSOR_DEFINITION	Sensor description	✓	
0x0201	SENSOR_VALUE	Sensor value	✓	✓
0x0400	DEVICE_HOURS	Fixture hours (non-resettable)	✓	✓
0x0405	DEVICE_POWER_CYCLES	Fixture power cycles (non-resettable)	✓	✓
DMX setup				
0x00E0	DMX_PERSONALITY	DMX mode	✓	✓
0x00E1	DMX_PERSONALITY_DESCRIPTION	DMX mode details	✓	
0x00F0	DMX_START_ADDRESS	DMX start address	✓	✓
0x0121	SLOT_DESCRIPTION	DMX channel details	✓	
Device management				
0x0050	SUPPORTED_PARAMETERS	Parameter discovery	✓	
0x0051	PARAMETER_DESCRIPTION	Parameter discovery	✓	
0x0090	FACTORY_DEFAULTS	Reset to factory defaults	✓	✓
0x1000	IDENTIFY_DEVICE	Identify fixture in rig	✓	✓
0x1001	RESET_DEVICE	Reset fixture		✓
0x1020	PERFORM_SELFTEST	Run self-test	✓	✓
0x1021	SELF_TEST_DESCRIPTION	Self-test description	✓	
0x8004	COLOR_MODE	Set color mode	✓	✓
0x8310	DIMMER_CURVE	Set dimmer curve	✓	✓
0x8335	POWER_LIMIT_MODE	Full or reduced power mode	✓	✓
0x8339	MANUAL_CTC_VALUE	Set default color temperature (QUAD fixtures in Basic DMX mode only)	✓	✓

PID	Name	Description	GET	SET
Status messages				
0x0020	QUEUED_MESSAGE	Get Queued Messages	✓	
0x0030	STATUS_MESSAGES	Get Status/Error Information	✓	
0x0031	STATUS_ID_DESCRIPTION	Status/Error Description	✓	
0x0032	CLEAR_STATUS_ID	Clear Status/Error Queue	✓	✓
Standalone operation				
0x1030	CAPTURE_PRESET	Capture current DMX values for use as standalone preset		✓
0x1031	PRESET_PLAYBACK	Play back standalone preset	✓	✓
0x8220	MANUAL_MODE_OVERRIDE	Remote manual control	✓	✓
0x810B	PRESET_PLAYBACK_LIMIT	Standalone cue counter	✓	✓
0x8101	SYNCHRONIZED	Sync mode in standalone	✓	✓
0x810C	OFFLINE_MODE	Set behavior when DMX stops	✓	✓

The text displayed and the options available in different RDM interfaces vary depending on the controller/software producer. The above table includes the custom PIDs used for standalone operation in the Martin Companion application.

Operating the fixture

Controlling via DMX

Once you have set up fixtures' DMX modes and DMX addresses via RDM, you can control fixtures using a DMX controller that is connected to the installation.

See the 'DMX protocols' section at the end of this manual for details of the control options available.

Identifying fixtures in the installation

To help with programming scenes and controlling the installation, it is possible to send an RDM command that causes a fixture to flash a signal so that you can identify it. To identify a fixture:

1. Black out all fixtures if you have been using them.
2. Send an IDENTIFY DEVICE unicast command to an individual fixture in the installation via RDM. The fixture will respond by flashing white, letting you identify it. In Martin Companion you can simply enable the "Identify" button in the toolbar, and then any fixture(s) you select will immediately identify itself. You can even use arrow keys to navigate through the list of fixtures, with the corresponding fixture flashing as soon as you get to it.
3. If your RDM-compatible DMX controller allows it, you can now identify the fixture at the controller.

Test sequences and fixture status

The Exterior Wash Pro Series Safety and Installation Manual that is included at the end of this User Manual contains information on displaying fixture status codes and running test sequences that you may find useful before starting fixture operation.

DMX protocols

QUAD fixtures

Exterior Wash Pro QUAD fixtures have four DMX control modes. See ‘QUAD fixture DMX modes’ on page 7 for full details.

Basic mode

Channel	DMX value	Function	Fade type	Default value
1	0-255	**Red**: 0-100%	Fade	0
2	0-255	**Green**: 0-100%	Fade	0
3	0-255	**Blue**: 0-100%	Fade	0

The default color temperature in Basic mode is 4000 K. This can be adjusted via RDM.

RGBW raw mode

Channel	DMX value	Function	Fade type	Default value
1	0-255	**Red**: 0-100%	Fade	0
2	0-255	**Green**: 0-100%	Fade	0
3	0-255	**Blue**: 0-100%	Fade	0
4	0-255	**White**: 0-100%	Fade	0

Standard mode

Channel	DMX value	Function	Fade type	Default value
1 **2**	0-65535	**Dimmer** Overall intensity 0 – 100%	Fade	0
3	0-255	**Red** Intensity 0-100%	Fade	255
4	0-255	**Green** Intensity 0-100%	Fade	255
5	0-255	**Blue** Intensity 0-100%	Fade	255
6	0-18 19-77 78 79-127 128 129-254 255	**Color Temperature Control** 1000 K 1050 K to 3950 K in 50 K steps 4000 K 4050 K to 6450 K in 50 K steps 6500 K 6550 K to 12 800 K in 50 K steps 12 850 K	Fade	78

Extended mode

Channel	DMX value	Function	Fade type	Default value
1	0-19 20-49 50-200 201-210 211-255	**Strobe/shutter effect** Shutter closed: blackout Shutter open: full intensity Strobe slow → fast Shutter open: full intensity Random strobe slow → fast	Snap	30
2 **3**	0-65535	**Dimmer** Overall intensity 0 – 100%	Fade	0
4	0-255	**Red** Intensity 0-100%	Fade	255
5	0-255	**Green** Intensity 0-100%	Fade	255
6	0-255	**Blue** Intensity 0-100%	Fade	255
7	0-18 19-77 78 79-127 128 129-254 255	**Color Temperature Control** 1000 K 1050 K to 3950 K in 50 K steps 4000 K 4050 K to 6450 K in 50 K steps 6500 K 6550 K to 12 800 K in 50 K steps 12 850 K	Fade	78

CTC fixtures

Exterior Wash Pro CTC fixtures have two DMX modes. See 'CTC fixture DMX modes' on page 8 for full details.

Basic mode

Channel	DMX value	Function	Fade type	Default value
1	0-255	**2400 K Warm White** 0-100%	Fade	0
2	0-255	**4000 K Medium White** 0-100%	Fade	0
3	0-255	**6500 K Cool White** 0-100%	Fade	0

Standard mode

Channel	DMX value	Function	Fade type	Default value
1 **2**	0-65535	**Dimmer** Overall intensity 0 – 100%	Fade	0
3	0-46 47-77 78 79-127 128-255	**Color Temperature Control** 2400 K 2450 K to 3950 K in 50 K steps 4000 K 4050 K to 6450 K in 50 K steps 6500 K	Fade	78

Troubleshooting

Problem	Probable cause(s)	Remedy
Fixture is completely dead.	No power to fixture.	Check power source and connections. Use magnetic ‘swipe’ tool to check that power is applied.
	Primary fuse blown.	Isolate fixture from power. Contact Martin Service for assistance.
One or more fixtures responds incorrectly to control or does not respond at all.	Incorrect DMX addressing.	Check number of DMX channels required by each fixture and check fixtures’ DMX addresses and addresses set on DMX controller.
	Incorrect DMX mode.	Check DMX mode setting.
	Fault on DMX link.	Inspect connections and cables. Correct poor connections. Check that data + and data - have not been swapped somewhere on the data link. Repair or replace faulty or damaged cables.
	Electromagnetic interference on DMX link	Move cables away from any strong electromagnetic fields.
	Fixture defective.	Have faulty fixture serviced by Martin Service.
	Other device on DMX link defective.	Bypass devices on DMX link until the faulty device has been identified. Have faulty device serviced by Martin Service or device supplier.
Light output intensity falls. The fixture eventually blacks out.	Fixture is too hot.	Ensure free airflow around fixture. Clean fixture. Check that ambient temperature does not exceed maximum permitted level. Contact Martin Service for assistance.

Exterior Wash Pro

S, M, L, XL – QUAD and CTC

Safety and Installation manual

Exterior Wash Pro XL QUAD

Exterior Wash Pro L QUAD

Exterior Wash Pro M QUAD

Exterior Wash Pro S QUAD

Exterior Wash Pro XL CTC

Exterior Wash Pro L CTC

Exterior Wash Pro M CTC

Exterior Wash Pro S CTC

Martin®

Dimensions

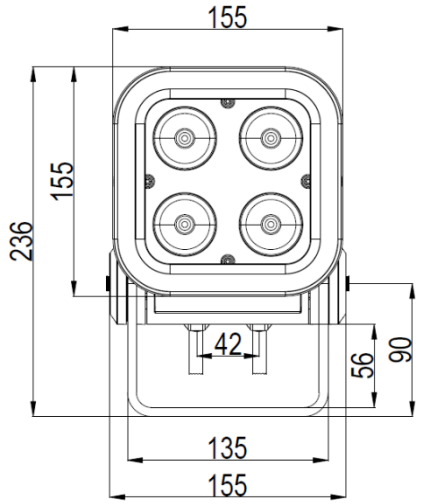

Exterior Wash Pro S

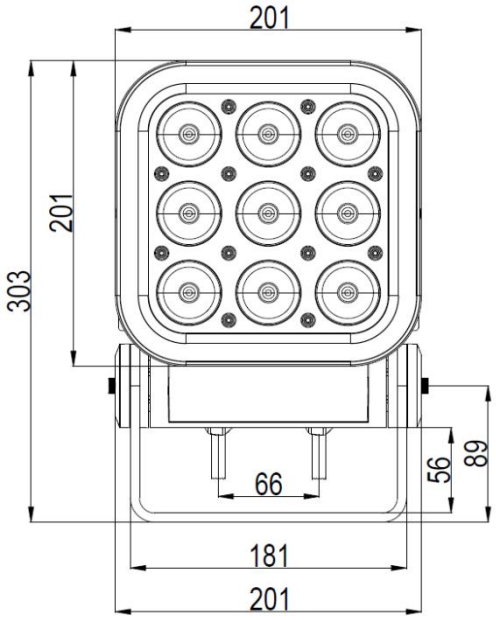

Exterior Wash Pro M

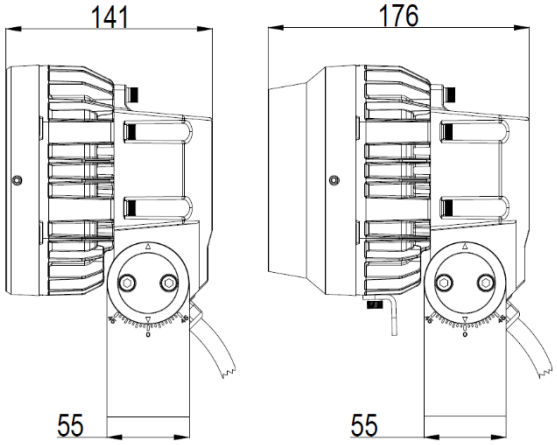

Exterior Wash Pro S with and without Baffle Snoot

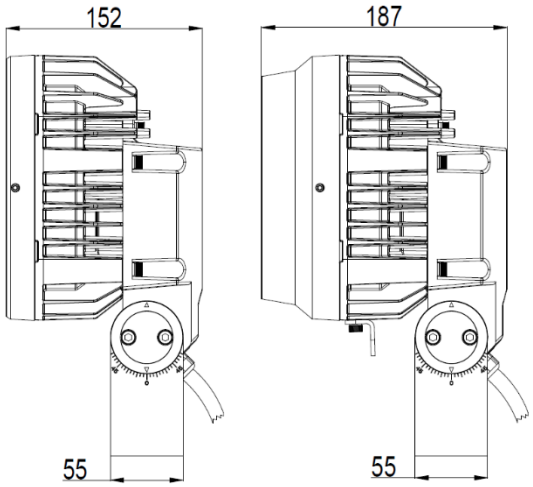

Exterior Wash Pro M with and without Baffle Snoot

©2023-2024 HARMAN PROFESSIONAL DENMARK ApS. All rights reserved. Features, specifications and appearance are subject to change without notice. HARMAN PROFESSIONAL DENMARK ApS and all affiliated companies disclaim liability for any injury, damage, direct or indirect loss, consequential or economic loss or any other loss occasioned by the use of, inability to use or reliance on the information contained in this document. Martin is a registered trademark of HARMAN PROFESSIONAL DENMARK ApS registered in the United States and/or other countries.

HARMAN PROFESSIONAL DENMARK ApS, Olof Palmes Allé 44, 8200 Aarhus N, Denmark
HARMAN PROFESSIONAL SOLUTIONS U.S., 8500 Balboa Blvd., Northridge CA 91329, USA

www.martin.com

Exterior Wash Pro family Safety and Installation Manual, English, Rev. D

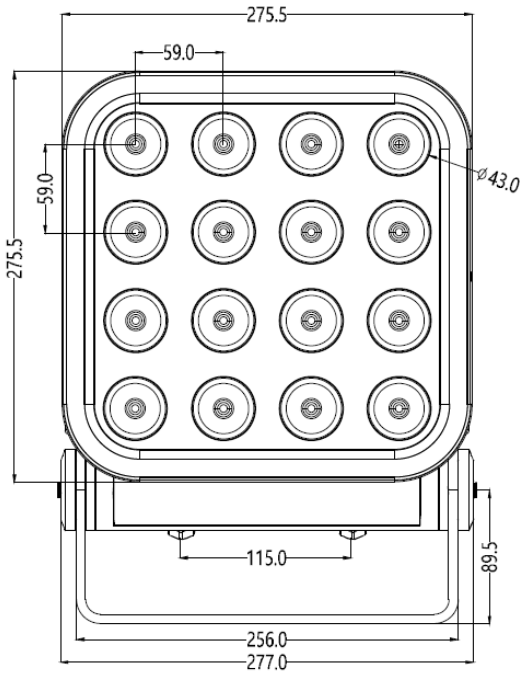

Exterior Wash Pro L

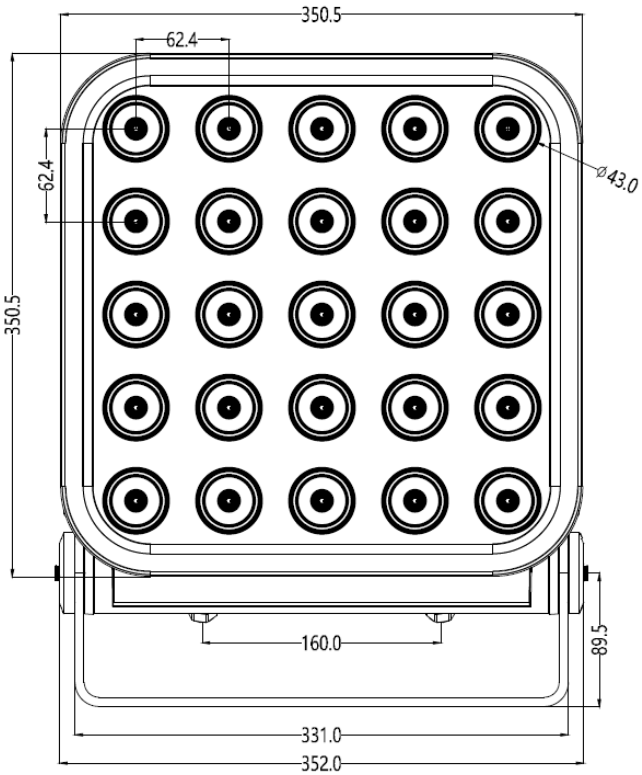

Exterior Wash Pro XL

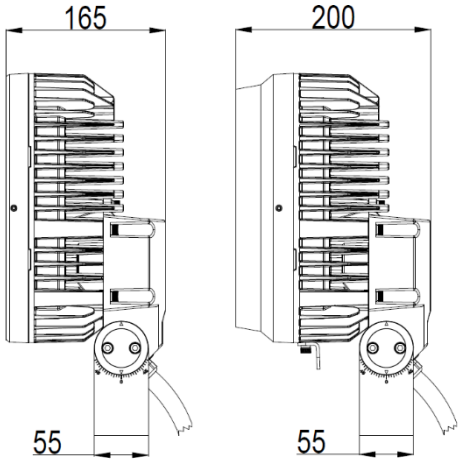

Exterior Wash Pro L with and without Baffle Snoot

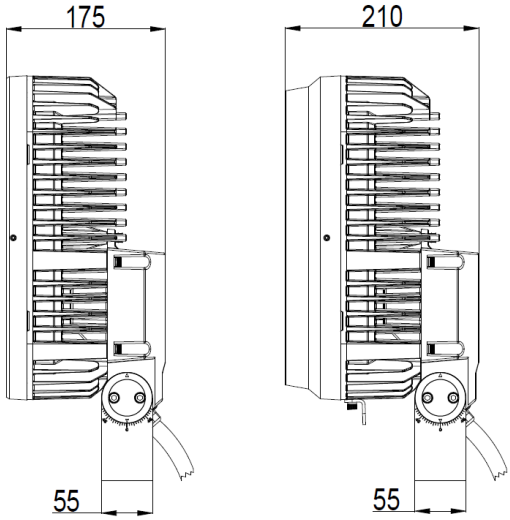

Exterior Wash Pro XL with and without Baffle Snoot

All dimensions are in millimeters.

Table of contents

Dimensions 2
Safety information 5
Introduction 10
- Accessories 10
- Precautions to avoid damage 10
- Before using the product for the first time 11

Physical installation 12
- Fixture location 12
- Mounting the fixture 12
- Securing with a safety cable 13
- Adjusting tilt 14
- Installing a microlens beam angle accessory 14
- Installing a Baffle Snoot 15

AC power 17
- Power characteristics 17
- Protecting connections from moisture 17
- Connecting to power 18
- Installing a temporary power plug 18

Connecting to control data 19
Testing 20
Maintenance 21
- Cleaning 21
- Installation safety 21
- Pressure relief valve 21
- Firmware maintenance 22

Safety information

WARNING!

Read the safety precautions in this manual before installing, operating or servicing this product.

The following symbols are used to identify important safety information on the product and in this manual:

Warning!	**Warning!**	**Warning!**	**Warning!**	**Warning!**	**Warning!**
Safety hazard. Risk of severe injury or death.	***Hazardous voltage. Risk of lethal or severe electric shock.***	***Fire hazard.***	***Burn hazard. Hot surface. Do not touch.***	***Intense light emission.***	***See user documentation.***

Warning! Exterior Wash Pro QUAD and Exterior Wash Pro CTC lighting fixtures are Risk Group 2 products according to IEC/TR 62778 for blue light only (see full details later in this chapter). These fixtures produce intense light output that may be hazardous if suitable precautions are not taken. Do not view the light output with optical instruments or any device that may concentrate the beam. Do not stare into the light output. Eye injury may result.

This fixture presents risks of severe injury or death due to burn and fire hazards, electric shock and falls if the safety precautions in this manual are not followed.

Read this Safety and Installation Manual before installing, powering. operating or servicing the fixture. Follow the safety precautions and observe all warnings in this manual, in the fixture's User Manual, and printed on the fixture. Respect all locally applicable laws, codes and regulations.

The fixture is for professional use and must be installed by a qualified technician. It is not for household use.

The safety and suitability of lifting equipment, installation location, anchoring method, mounting hardware and electrical installation are the responsibility of the installer.

Users may carry out external cleaning and install microlens accessories and the Baffle Snoot available from Martin following the instructions and warnings given in this manual, but any service operation not described in this manual or in the fixture's User Manual must be referred to an authorized Martin service agent. The light source contained in the fixture may be replaced by Martin or an authorized Martin service agent only.

The fixture is suitable for mounting at any height, including less than 1.2 m (3.9 ft.) and more than 5 m (16.4 ft.) above ground or floor level.

Do not operate the fixture at an altitude of more than 2000 m (6570 ft.) above sea level.

Technical Support

If you have any questions about how to install or operate the fixture safely, please contact Harman Professional Technical support.

For technical support in N. America, please contact
HProTechSupportUSA@harman.com
Phone: (844) 776-4899

For technical support outside North America, please contact your national distributor.

Read this manual before installing, powering or servicing the fixture. Follow the safety precautions and observe all warnings in this manual and printed on the fixture.

The latest version of this manual is available for download from the Exterior Wash Pro pages of the Martin® website at www.martin.com. Before you install, operate or service an Exterior Wash Pro family fixture, check the Martin website and make sure that you have the latest user documentation for the fixture. Document revisions are indicated at the bottom of page 2.

Install, operate and service Martin products only as directed in their manuals, or you may create a safety hazard or cause damage that is not covered by product warranties. Keep this manual for future use.

Protection from electric shock

This fixture is IP66 rated. It is suitable for use in wet locations, but do not immerse it in water or install it in a location where it may become submerged. Ensure sufficient drainage to cope with the heaviest rainfall. Make sure that water can drain away from the installation area at least as fast as it can enter it.

Do not allow water to collect on or near the pressure equalization valve located on the rear of the fixture between the cable entries. Do not install a fixture with the valve membrane horizontal so that water can pool on it. Do not cover, immerse or block the valve. Check the valve periodically. If it appears dirty, it may be becoming blocked. Contact an authorized Martin service agent for possible replacement.

Arrange cables so that they arrive at connectors from below. Create a ‘drip loop’ if necessary. With this arrangement, gravity will cause any condensation or water droplets to run away from connectors.

Support the weight of cable runs. Do not allow a length of cable to hang from a cable gland or connector.

This fixture is a Class I product according to IEC 61140. Ensure that the fixture is electrically connected to ground (earth) via the fixture’s mains power cable.

The DMX and Ethernet transceivers of the fixture are isolated/SELV to prevent ground loops and for safety reasons.

This fixture accepts AC mains power within the ranges 100-120 V~ and 200-277 V~ nominal at 50 or 60 Hz only. Do not connect it to power at any other voltage or frequency.

Exterior Wash Pro QUAD and CTC fixtures have the following AC mains power characteristics:

- Exterior Wash Pro S
  - Maximum power consumption: 35 W
  - Maximum current draw: 0.35 A at 100-120 V~, 0.16 A at 200-240 V~
- Exterior Wash Pro M
  - Maximum power consumption: 75 W
  - Maximum current draw: 0.75 A at 100-120 V~, 0.35 A at 200-240 V~

- Exterior Wash Pro L
  - Maximum power consumption: 150 W
  - Maximum current draw: 1.5 A at 100-120 V~, 0.69 A at 200-240 V~
- Exterior Wash Pro XL
  - Maximum power consumption: 250 W
  - Maximum current draw: 2.5 A at 100-120 V~, 1.13 A at 200-240 V~

Use only a source of AC power that complies with local building and electrical codes and has both overload and ground-fault (earth-fault) protection.

Before using the fixture, check that all power distribution equipment and cables are in perfect condition, are rated for the current requirements of all connected devices, are protected to IP66 or higher and are of suitable type for the location (including water, pollution, temperature and UV resistance).Disconnect the fixture from AC power when not in use.

You may install micro lens accessories and install a Baffle Snoot as described in this manual, but do not open the fixture or remove any cover. Refer any service operation not described in this manual to an authorized Martin Service agent.

Shut down power to the entire installation at the main power distribution board and lock out power before carrying out any installation or maintenance work.

Isolate the fixture from power immediately if any seal, cover, cable, or other component is damaged, defective, deformed or showing signs of overheating. Do not reapply power until repairs have been completed.

Protection from burns and fire

Do not operate the fixture if the ambient temperature (Ta) exceeds 45° C (113° F). Above this temperature, the fixture regulates output to protect from overheating.

The surface of the product can become hot during operation. Avoid contact by persons and materials. Allow the fixture to cool for at least 10 minutes before handling.

Keep flammable materials well away from the fixture. Keep all combustible materials (e.g. fabric, wood, paper) at least 10 cm (4 in.) away from the front of the fixture.

Ensure that there is free and unobstructed airflow around the fixture.

Do not illuminate surfaces that are closer than the following minimum distances from the fixture:

- Exterior Wash Pro QUAD and CTC S, M and L: 10 cm (4 in.)
- Exterior Wash Pro QUAD and CTC XL: 40 cm (15.8 in.).

Do not attempt to bypass thermostatic switches or fuses.

Do not modify the fixture in any way not described in this manual or install other than genuine Martin® parts. Do not stick filters, masks or other materials onto any lens or other optical component. Use only accessories approved by Martin® to modify the light beam.

The fixture's optical components can focus the sun's rays, creating a risk of fire and damage. Do not expose the front of the fixture to sunlight or any other intense light source.

Protection from eye injury

Do not look directly into the product's light output.

Do not look at the light output with magnifiers, telescopes, binoculars or similar optical instruments that may concentrate the light output.

Ensure that persons are not looking directly into the front of the fixture when the product lights up suddenly. This can happen when power is applied, when the product receives a DMX signal, or when certain control menu items are selected.

Do not stare into the light output. Eye injury may result.

Disconnect the fixture from power at all times when the fixture is not in use.

Provide well-lit conditions to reduce the pupil diameter of anyone working on or near the fixture.

Wear protective glasses and other PPE (personal protective equipment) when working on or near the fixture.

Exterior Wash Pro fixtures emit possibly hazardous optical radiation. Exterior Wash Pro QUAD and CTC fixtures are Risk Group 2 products. See the diagrams and safety instructions given below for these fixtures. The Risk Group distances indicated apply to the light output from one fixture only. If fixtures can be operated in combination, light intensity can increase and you should consult a lighting professional for more appropriate safety recommendations.

Exterior Wash Pro QUAD

Exterior Wash Pro S, M, L and XL QUAD fixtures are classified Photobiological Risk Group 2 according to IEC/TR 62778 for blue light only. They fall into the Risk Group categories shown below according to IEC/TR 62778 under worst-case conditions:

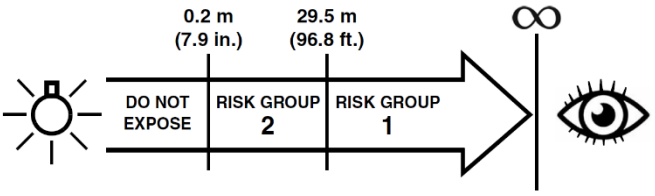

At a distance of less than 0.2 m (7.9 in.) from the fixture, the light output can potentially cause eye or skin injury before an exposed person's natural aversion responses (blink reflex and reaction to skin discomfort) can protect them. At distances greater than 0.2 m (7.9 in.), potential eye and skin injury hazards from the light output are normally prevented by natural aversion reflexes.

Position the Exterior Wash Pro QUAD so that persons cannot be exposed to the fixture's light output at less than 0.2 m (7.9 in.) from the fixture and so that prolonged staring into the light output at less than 29.5 m (96.8 ft.) from the fixture is not expected.

Exterior Wash Pro CTC

Exterior Wash Pro S, M, L and XL CTC fixtures are classified Photobiological Risk Group 2 according to IEC/TR 62778 for blue light only. They fall into the Risk Group categories shown below according to IEC/TR 62778 under worst-case conditions:

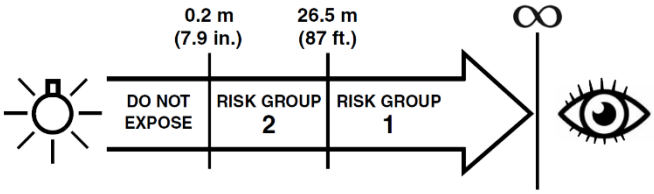

At a distance of less than 0.2 m (7.9 in.) from the fixture, the light output can potentially cause eye or skin injury before an exposed person's natural aversion responses (blink reflex and reaction to skin discomfort) can protect them. At distances greater than 0.2 m (7.9 in.), potential eye and skin injury hazards from the light output are normally prevented by natural aversion reflexes.

Position the Exterior Wash Pro CTC so that persons cannot be exposed to the fixture's light output at less than 0.2 m (7.9 in.) from the fixture and so that prolonged staring into the light output at less than 26.5 m (87 ft.) from the fixture is not expected.

Protection from injury

Fasten the fixture securely to a fixed surface or structure when in use. The fixture is not portable when installed.

To reduce the risk of strangulation, the flexible wiring connected to this fixture shall be effectively fixed to the wall if the wiring is within arm's reach.

Exterior Wash Pro QUAD and CTC fixtures have the following weights (mounting yoke included):

- Exterior Wash Pro S: 4.8 kg (10.6 lbs.)
- Exterior Wash Pro M: 7.4 kg (16.3 lbs.)
- Exterior Wash Pro L: 12.1 kg (26.7 lbs.)
- Exterior Wash Pro XL: 18.1 kg (39.9 lbs.)

Ensure that any supporting structure and/or hardware used can hold at least six (6) times (or more if required by local regulations) the weight of all the devices they support.

If suspending from a rigging structure, fasten the fixture to a rigging clamp. Do not use safety cables as the primary means of support. If the fixture is installed in a location where it may cause injury or damage if it falls, provide a secondary attachment such as a safety cable inserted through the secondary attachment point that will hold the fixture if a primary attachment fails. The secondary attachment must be approved by an official body such as TÜV as a safety attachment for the weight that it secures, must comply with DGUV 17 (BGV C1) or EN 60598-2-17 Section 17.6.6 and must be capable of bearing a static suspended load that is six (6) times (or more if required by local regulations) the weight of the fixture and all installed accessories.

The safety and suitability of lifting equipment, installation location, anchoring method, mounting hardware and electrical installation are the responsibility of the installer.

All fasteners used to mount fixtures must be suitable for the application, corrosion resistant and strong enough to mount the fixture safely.

Block access below the work area and work from a stable platform whenever installing, setting, adjusting, or cleaning the fixture.

After installation or service, check that the fixture and the trim frame or Baffle Snoot are securely fastened.

Do not operate the fixture with missing or damaged covers, shields or any optical component.

In the event of an operating problem, stop using the fixture immediately and disconnect it from power. Do not attempt to use a fixture that is obviously damaged.

The fixture’s Effective Projected Area (EPA) is as follows:

	Fixture only	Fixture with Baffle Snoot
Exterior Wash Pro S	0.024 m²	0.038 m²
Exterior Wash Pro M	0.048 m²	0.072 m²
Exterior Wash Pro L	0.084 m²	0.120 m²
Exterior Wash Pro XL	0.144 m²	0.180 m²

Introduction

Thank you for selecting an Exterior Wash Pro lighting fixture from Martin®. This Safety and Installation Manual covers the following Exterior Wash Pro family lighting fixtures from Martin®:

- **Exterior Wash Pro QUAD S, M, L and XL** fixtures with premixed quad-color LEDs optimized for superior color mixing.
- **Exterior Wash Pro CTC S, M, L and XL** fixtures with mixable warm-white, medium white and cold-white LEDs that give white tones ranging in color temperature from 2400 K to 6500 K.

This Safety and Installation Manual is supplied with the fixture. It gives details of installing and servicing the fixture as well as connecting to mains power. The Exterior Wash Pro User Manual, containing full instructions for connecting to control data, setting up, controlling and monitoring the fixture, is available for download from the Exterior Wash Pro area of the Martin website at www.martin.com. If you have any difficulty locating this document, please contact your Martin supplier for assistance.

Before installing, operating or servicing an Exterior Wash Pro fixture, please check the fixture's area of the Martin website at www.martin.com and make sure that you have the latest user documentation for the product.

Not all product specifications are included in the fixture's user documentation. You can find full specifications for the fixture in the Exterior Wash Pro area of the Martin website. The online specifications include information to help you order accessories such as cables, flightcases etc.

Each fixture is supplied with this safety and installation manual. The fixture is prepared for hard wiring with 2 m (6.5 ft.) cable tails for power and data connection inside sealed junction boxes, preferably filled with potting compound.

Accessories

Narrow, Medium, Wide, Very Wide and Asymmetric beam angle micro lens accessories are available from Martin. A Baffle Snoot accessory that limits light spill and integrates with the fixture's design is also available. These accessories are designed to mount quickly on the front of the fixture. See the Exterior Wash Pro pages on the Martin website at www.martin.com for details and ordering information.

A safety cable attachment bracket is also available as an accessory.

Cable tail accessories

The fixture is supplied with two 2 m (6.6 ft.) cable tails with bare ends installed, one for connection to power and one for connection to data. These cables are suitable for connection to power and data links inside a junction box.

As an alternative, 0.5 m (1.6 ft.) hybrid (combined power and data) cable tails with the same IP67-rated PD connectors as used on Martin Exterior Linear Pro fixtures are available as accessories from Martin suppliers (see illustration on right). Cable tails with PD connectors allow quick and easy connection to other fixtures and to power and data links using the PD extension cables that are available from Martin suppliers. The cable tails can be ordered using the following part numbers:

- PD Cable Tail, 0.5 m black, EU, P/N MAR-91700020
- PD Cable Tail, 0.5 m white, EU, P/N MAR-91700022

The PD cable tails fit all sizes of Exterior Wash Pro fixtures and are supplied with installation instructions. The system diagrams available in the DOWNLOADS section of the Exterior Wash Pro pages on the Martin website at www.martin.com will help with planning the installation layout.

Precautions to avoid damage

Important! To get the best out of the Exterior Wash Pro and avoid causing damage that is not covered by the product warranty, make sure that everyone who is involved in installing, working on or using the fixture has read and understood the following information.

Cleaning

Excessive dirt buildup causes overheating and may lead to damage that is not covered by the product warranty. Clean the product at regular intervals (see “Cleaning” on page 21)

Operating temperature precautions

Do not operate the fixture in an ambient temperature that exceeds the specified maximum of 45° C (113° F). Fixtures have an internal thermal sensor. If the sensor measures excessive temperature, a thermal protection system reduces output. If the temperature is dangerously high, a thermal cutout shuts down the fixture. The fixture will not function normally again until the temperature has fallen to a safe level.

Maintaining IP66 protection

The fixture is supplied as a sealed unit. It may be opened for the purposes of changing power and/or data cables by a qualified technician in a controlled environment with service documentation or guidance from Martin Service only.

Condensation and pressure relief valve

A valve with a gas-permeable membrane in the base of the product equalizes pressure by allowing air to pass through it when the product heats up and cools down, but at the same time it acts as a barrier to water in liquid form. This valve requires maintenance – see ‘Pressure relief valve’ on page 21 for details.

Under certain conditions, condensation may become visible under optical components. This is normal and harmless. The fixture gradually expels condensation via its pressure relief valve.

Before using the product for the first time

1. Read ‘Safety information’ on page 5 before installing, operating or servicing the fixture.
2. Unpack the fixture. Please make sure to recycle cardboard packaging material. Both the inner layer (buffer) and the outer box are 100% cardboard.
3. Ensure that there is no transportation damage before using the fixture. Do not attempt to operate a damaged fixture.
4. If testing and/or setting up the fixture before it is hard-wired to a mains supply, install a local power plug (not supplied) to the end of the supplied power cable.
5. Before operating, ensure that the voltage and frequency of the power supply match the power requirements of the fixture.
6. Check the support pages on the Martin Professional website at www.martin.com for the most recent user documentation and technical information about the fixture. Martin® manual revisions are identified by the revision letter at the bottom of the inside cover.

Physical installation

Warning! Read ‘Safety information’ on page 5 before installing the fixture.

Contact your Martin® supplier for assistance if you have any questions about how to install this product safely.

Fixture location

Exterior Wash Pro family fixtures are intended for outdoor use. With an IP66 rating, they are protected against dust, humidity and water and are able to withstand powerful water jets, but they are not submersible.

Mounting the fixture

The fixture and yoke can be mounted at any angle. The yoke allows the fixture to be manually panned and tilted for beam aiming adjustment.

The fixture and mounting bracket are manufactured in corrosion-resistant anodized aluminum. Avoid mounting the fixture in direct contact with other types of metal, as this can cause galvanic corrosion. When fastening to a dissimilar metal surface:

- Use an electrically insulating material (such as rubber or plastic) or coating between the mounting bracket and the other metal.
- Use a non-conductive coating such as Delta Seal on fasteners (screws, bolts, washers, etc.) where they come into contact with the mounting bracket.

The fixture’s mounting yoke base must be securely and safely anchored to a stable, static surface, pedestal, structural beam, rigging truss or other suitable support. Do not stand the fixture unanchored on a surface or leave it where it can be moved or fall over.

Mounting on a surface

To anchor the mounting yoke to a wall or other flat surface, use **at least three** high-strength corrosion-resistant fasteners that are safe for the application and the environment (recommended minimum properties: stainless steel A4-70 grade according to ISO 3506 or steel grade 8.8 according to ISO 898-1). Any nuts used must be self-locking. Install washers under all nuts and bolt heads. Make sure that there is a washer between each fastener and the yoke base.

To mount L and XL fixtures on a suitable surface:

1. See Figure 1. Pass a 12 mm (1/2 inch) shaft diameter bolt through the 13.5 mm hole in the center of the yoke base and fasten it finger-tight into the surface.

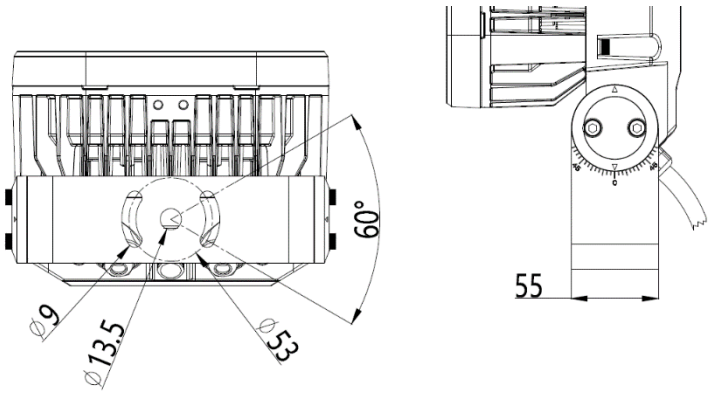

Figure 1. Mounting yoke base, S and M fixtures

2. Pass two bolts with 8 mm (5/16 inch) shaft diameter through the 9 mm curved slots and fasten them finger-tight into the mounting surface.
3. Adjust the aim of the fixture by turning it within the 60° of pan adjustment available, then fully tighten all three bolts. If additional fasteners are required to mount the fixture safely, pass two 8 mm (5/16 inch) shaft diameter bolts through the 9 mm curved slots in the yoke base and fasten them into the mounting surface.

To mount L and XL fixtures on a suitable surface:

1. See illustration below. Pass a 12 mm (1/2 inch) shaft diameter bolt through the 13.5 mm hole in the center of the yoke base and fasten it finger-tight into the surface.
2. Pass two bolts with 8 mm (5/16 inch) shaft diameter through the 9 mm curved slots and fasten them finger-tight into the mounting surface.
3. Adjust the aim of the fixture by turning it within the 60° of pan adjustment available, then fully tighten all three bolts.
4. If additional fasteners are required to mount the fixture safely, pass two 12 mm (1/2 inch) shaft diameter bolts through the 13.5 mm holes at the edges of the yoke base and tighten them into the mounting surface.

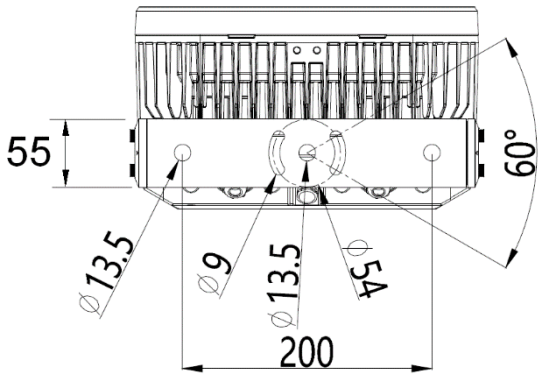

Figure 2. Mounting yoke base, L and XL fixtures

Securing with a safety cable

If regulations require it, the fixture can be secured with a safety cable that is approved for the weight of the fixture and mounting hardware.

To secure the fixture with a safety cable:

1. Obtain an Exterior Wash Pro Safety Cable Attachment Bracket from your Martin supplier. Fasten this bracket (arrowed) securely to the bottom of the fixture as shown in the illustration below using the screws supplied with the bracket.

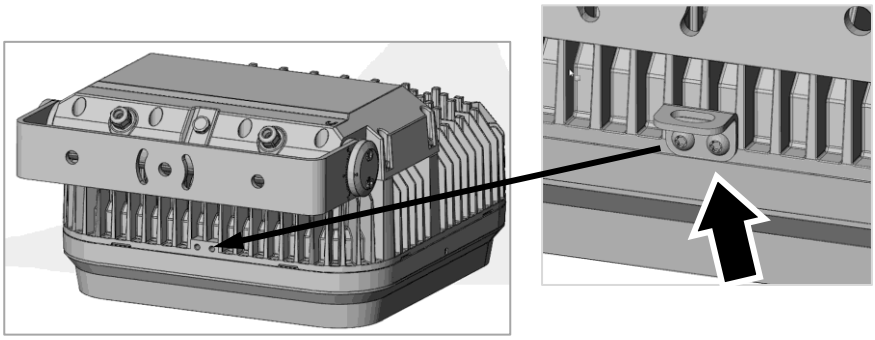

2. Fasten the safety cable to a secure anchoring point, by looping it around the truss chord, for example. Remove as much slack as possible from the safety cable by looping it more than once around the truss chord, for example. Then fasten the safety cable to the attachment bracket on the fixture with the cable's carabiner clip. Make sure that the cable will catch the fixture if a primary means of suspension fails.

Adjusting tilt

Warning! The fixture can become hot. Wear heat-resistant gloves if you adjust the aim of the fixture when it is (or has recently been) powered on.

Tilt adjustment can be carried out with the fixture powered on as follows:

1. Put on heat-resistant gloves.
2. See illustration on right. Loosen, but do not remove, the tilt lock screws (arrowed) on both sides of the yoke.
3. Tilt the fixture to the desired angle and retighten the screws. You can tilt the fixture up to 45° forward or 45° backward. A scale is printed on the yoke to ensure accurate adjustment.

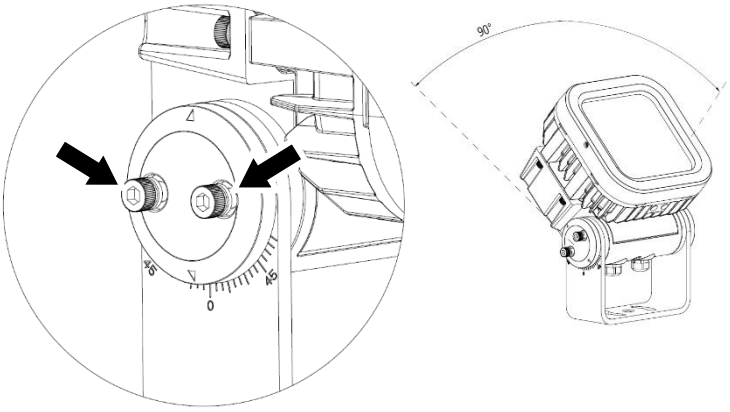

Figure 3. Tilt adjustment

Installing a microlens beam angle accessory

Optional microlenses that modify the beam angle are available from Martin (see the Exterior Wash Pro pages on the Martin website at www.martin.com for details and ordering information). The following options are available:

- Narrow (8°)
- Medium (15°)
- Wide (25°)
- Very Wide (50°)'
- Asymmetric (5 x 60°)

Note that the nominal beam angles given above are for reference only. The effective beam angle is a combination of the nominal microlens angle and the fixture beam angle defined by the lens.

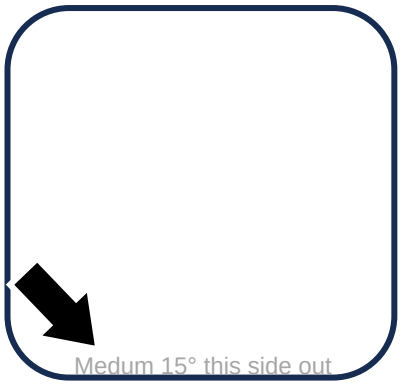

Figure 4. Microlens marking

Located close to the edge of the microlens is a marking that gives the microlens's nominal beam angle and indicates which side of the microlens must face outwards (see illustration on rightFigure 4). Note that the marking can be partially hidden under the microlens's silicone gasket.

The asymmetric microlens also includes markings with arrows and beam angles indicating the orientation of the microlens.

The microlens is held in place on the front of the fixture by the fixture's trim frame or, if installed, by a Baffle Snoot accessory.

To install an optional microlens:

1. Shut down power to the fixture and allow it to cool.

2. See **A** in Figure 5. Loosen the captive screws from both sides of the trim frame (or Baffle Snoot, if used) on the front of the fixture by pressing them in and turning them clockwise until they reach a stop.
3. See **B**. Using the Exterior Multitool available from Martin or a similar tool with no sharp edges, lever the trim frame carefully away from the fixture. Avoid damaging the fixture housing, seal or trim frame.
4. See **C**. Remove the screws from the filter holder on the front of the fixture and remove the filter holder (the number and positions of the screws varies depending on fixture).
5. See **D**. Position the microlens (arrowed) in the recess provided for it in the front of the fixture, making sure that the marking '**This side out**' close to the edge of the microlens faces outwards, towards the front of the fixture. Re-install the filter holder, tightening the screws evenly. Make sure that the microlens remains in position while installing the filter holder.
6. Re-install the trim frame (or Baffle Snoot, if used) and fasten it in place with its two captive screws. Press each screw in and turn it counter-clockwise until it reaches a stop. Check that the trim frame is held securely.

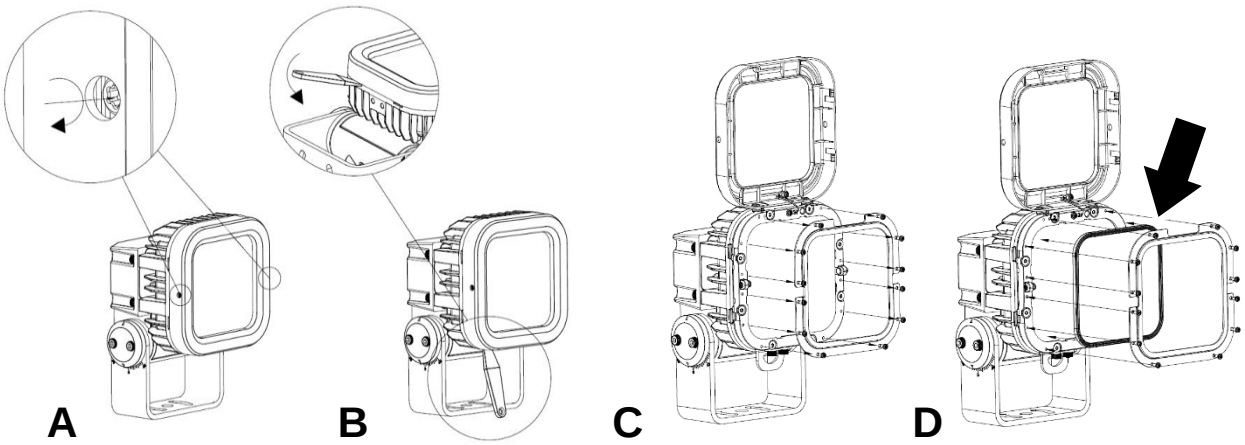

Figure 5. Microlens installation

In S, M and L fixtures, it is possible to use an asymmetric microlens to modify the orientation of the beam's wide/narrow configuration to angles other than 90° by ordering a microlens for the next size fixture up and cutting it to shape with the microlens at an angle.

Installing a Baffle Snoot

The optional Baffle Snoot accessory for Exterior Wash Pro fixtures may be installed with or without a microlens (see previous page).

1. To install a Baffle Snoot accessory:
2. Shut down power to the fixture and allow it to cool.
3. Refer to the illustration on the next page. See **A**. Loosen the two captive screws (arrowed) in the sides of the trim frame on the front of the fixture by pressing them n and turning them clockwise until they reach a stop.
4. See **B**. Using the Exterior Multitool available from Martin or a similar plastic tool with no sharp edges, lever the trim frame carefully away from the fixture. Avoid damaging the fixture housing, seal or trim frame.
5. See **C**. Lift the trim frame up as shown, remove the screw (arrowed) from the safety wire and release the wire from the trim frame. Set the trim frame aside for storage and possible future re-use.
6. See **D**. Hold the snoot up to the front of the fixture. Fasten the safety wire to the snoot re-using the safety wire's screw (arrowed).

7. See **E**. Place the snoot into position on the front of the fixture, lining it up carefully, and fasten it to the fixture with the two captive screws in the snoot. Press each screw in and turn it counter-clockwise until it reaches a stop. Check that the snoot is held securely.

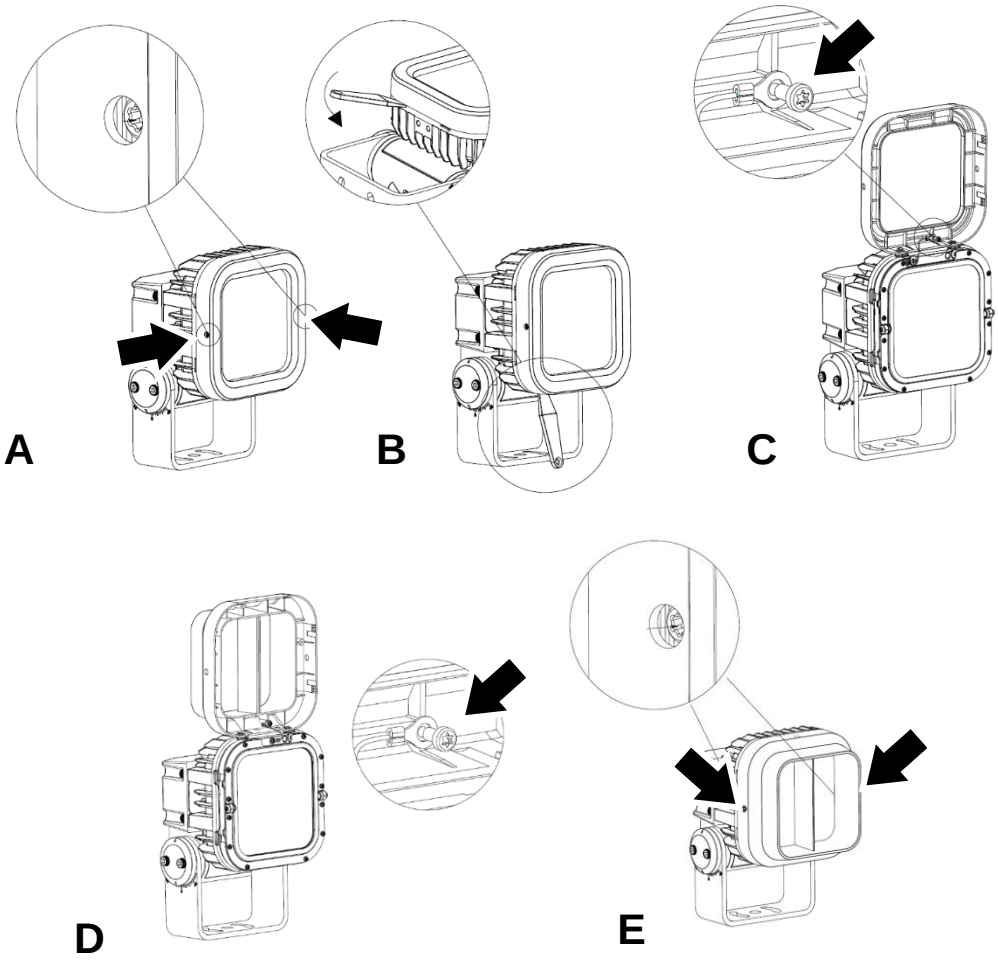

Figure 6. Installing a Baffle Snoot

AC power

Warning! Read “Safety Information” on page 5 before attempting to connect an Exterior Wash Pro fixture to power.

The system diagrams available in the DOWNLOADS section of the Exterior Wash Pro pages on the Martin website at www.martin.com will also help with planning the installation layout.

Exterior Wash Pro fixtures are supplied in EU and US models. Both models accept AC power at 100-240 V nominal or 277 V nominal at 50 or 60 Hz. Do not connect to power at any other voltage or frequency.

You can connect Exterior Wash Pro fixtures to either of the following mains power distribution systems:

- Single-phase (live, neutral, ground/earth) system.
- Grounded/earthed three-phase four-wire (three phases, neutral, ground/earth) system.

Do not try to connect a fixture to a three-phase three-wire (three phases, ground/earth) system.

There is no power on/off switch. Power is applied to an Exterior Wash Pro fixture as soon as it is connected to power. Provide a means to disconnect or shut down power to fixtures that is easily accessible and is located close to the fixtures.

Do not use an external dimming system to supply power to the fixture, as this may cause damage to the fixture that is not covered by the product warranty.

Power characteristics

The current draw, power consumption and power factor figures for Exterior Wash Pro fixtures are as follows:

Mains power	Exterior Wash Pro S	Exterior Wash Pro M	Exterior Wash Pro L	Exterior Wash Pro XL
100 V,60 Hz	0.35 A, 35 W, PF 0.99	0.75 A, 75 W, PF 0.99	1.5 A, 150 W, PF 0.99	2.5 A, 250 W, PF 0.99
120 V,60 Hz	0.29 A, 35 W, PF 0.99	0.63 A, 75 W, PF 0.99	1.26 A, 150 W, PF 0.99	2.1 A, 250 W, PF 0.99
230 V,50 Hz	0.16 A, 35 W, PF 0.94	0.35 A, 75 W, PF 0.94	0.69 A, 150 W, PF 0.95	1.13 A, 250 W, PF 0.96
277 V,50 Hz	0.14 A, 35 W, PF 0.90	0.30 A, 75 W, PF 0.90	0.60 A, 150 W, PF 0.91	0.98 A, 250 W, PF 0.92

**Power figures are typical, not maximum. Measurements made at nominal voltage. Allow for +/- 10% deviation.*
PF = Power factor. Allow for +/- 0.05 deviation.

Typical half-cycle RMS inrush current: 16.0 A at 230 V, 50 Hz.

Typical earth-leakage current: 0.5 mA.

Surge protection: 4 kV

Protecting connections from moisture

Moisture can cause corrosion in unprotected cable connections. Moisture can also be sucked along the inside of cables at breaks or cuts in the cable jacket (for example at connection points) and into fixtures because of the vacuum effect of temperature fluctuations inside fixtures. To protect connections and fixtures from moisture, take at least one of the following precautions:

- Locate cable junctions in dry areas (e.g. junction boxes in dry locations).
- Use connectors or junction boxes that are protected to IP67 or higher.
- Fill junction boxes with potting compound to seal the ends of cables and to protect connections from corrosion.

Connecting to power

The fixture is supplied with a 2 m (6.5 ft.) power cable tail installed ready for connection. See illustration below:

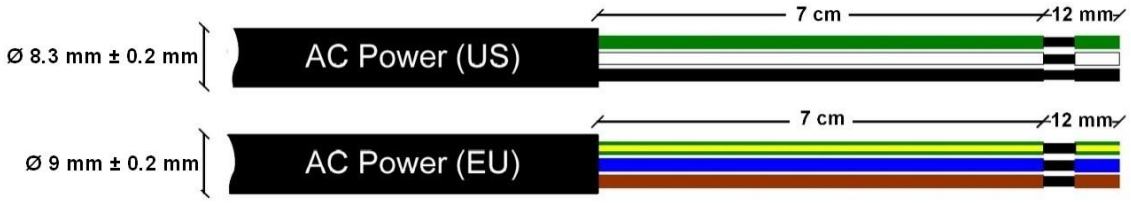

AC power cable details

To connect to a single-phase system or to one phase of a three-phase, four-wire system:

1. Lock out power to the installation.
2. Connect the conductors in the power cable to the distribution circuit inside a sealed junction box as follows:
   - Connect the green wire (US models) or yellow/green wire (EU models) to ground (earth).
   - Connect the white wire (US models) or blue wire (EU models) to neutral.
   - Connect the black wire (US models) or brown wire (EU models) to live (one phase).
3. Check that all installation work is completed and carry out appropriate tests and safety checks before applying power.

Installing a temporary power plug

If you install a power plug on the power cable for temporary use, install a grounding type (earthed) plug with integral cable grip that is rated minimum 277 V, 6 A. Follow the plug manufacturer's instructions and connect the wires in the power cable as shown in the following table:

	Live or L	**Neutral or N**	**Earth, Ground or ⏚**
US system	Black	White	Green
EU system	Brown	Blue	Yellow/green

Power plug connections

Connecting to control data

The system diagrams available in the DOWNLOADS section of the Exterior Wash Pro pages on the Martin website at www.martin.com will also help with planning the installation layout.

A DMX512 data link is required in order to control the fixture via DMX (and manage fixtures via RDM, if used). Your Martin® supplier will be happy to help if you need advice or assistance in planning the link.

Important! Protect all connections and all breaks in cable jackets from moisture (see 'Protecting connections from moisture' on page 17).

The fixture has a 2 m (6.5 ft.) cable tail with two pairs of data conductors and two shield wires for data connection. See below.

	Data Input pair (white sleeve)		Data output pair (black sleeve)		Shield (x 2)
Wire color	**Grey**	**White**	**Blue**	**Black**	**Black**
Signal	DMX IN -	DMX IN +	DMX OUT -	DMX OUT +	Common
Male XLR (if used)	Pin 2	Pin 3	-	-	Pin 1
Female XLR (if used)	-	-	Pin 2	Pin 3	Pin 1

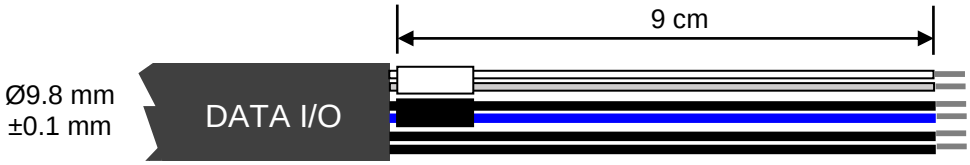

Data connections

Do not connect either of the shield conductors to ground (earth) or allow a shield conductor to come into contact with a connector shell, as this may cause interference.

You can connect the fixture's data cable tails to a DMX/RDM data link using screw terminals, quick connectors or soldered joints in junction boxes or using XLR connectors that are suitable for the environment. Ensure that the fixture is protected from the entry of water via the data cable by using junction boxes or connectors that are protected to IP67 or higher. Fill junction boxes with potting compound.

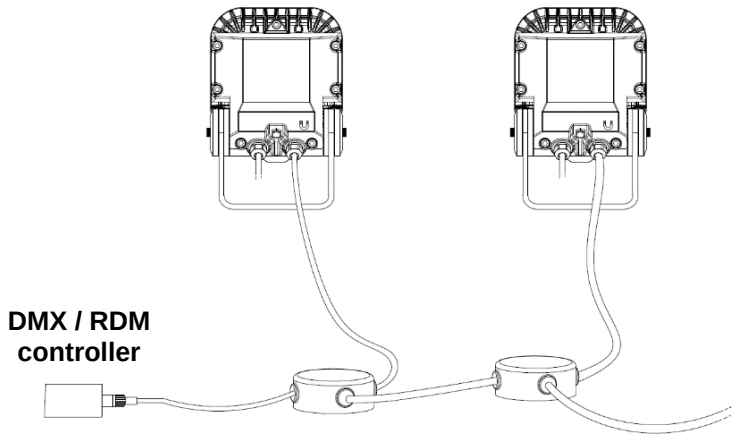

DMX data link layout

Testing

Exterior Wash Pro fixtures are programmed with a test sequence that is activated by ‘swiping’ (moving) a magnet past a magnetic switch inside the fixture. The magnetic switch is located on the rear of the fixture. A magnet icon is provided on the housing to show the switch location.

Exterior Wash Pro QUAD models

Swiping a magnet past the magnetic switch causes the fixture to step through the following sequence:

1. Display status code (see table below for meaning).
2. All LEDs at full intensity.
3. All red LEDs at full intensity.
4. All green LEDs at full intensity.
5. All blue LEDs at full intensity.
6. All white LEDs at full intensity.
7. Exit sequence and resume normal operation.

You can also resume normal operation by cycling power off and on. If you are sending a DMX signal to the fixture, it will exit the sequence and enter normal DMX operation again after a short period.

Fixture status is indicated as follows:

LED color	Signal	Status
Blue	Fast flash	Busy (booting or uploading SW)
Blue	Slow flash	No DMX detected
Green/blue	Alternating	Running normally in DMX mode

Exterior Wash Pro CTC models

Swiping a magnet past the magnetic switch causes the fixture to step through the following sequence:

1. Display status code (see table below for meaning).
2. All LEDs at full intensity.
3. All cold white LEDs at full intensity.
4. All medium white LEDs at full intensity.
5. All warm white LEDs at full intensity.
6. Exit sequence and resume normal operation.

You can also resume normal operation by cycling power off and on. If you are sending a DMX signal to the fixture, it will exit the sequence and enter normal DMX operation again after a short period.

Fixture status is indicated as follows.

LED color	Signal	Status
Cold	Fast flash	Busy (booting or uploading SW)
Cold	Slow flash	No DMX detected
Cold/warm	Alternating	Running normally in DMX mode

Maintenance

Warning! Read ‘Safety information’ on page 5 before carrying out service or maintenance. There are no user-serviceable parts inside. Do not open the housing. Refer any service operation not described in this manual to Martin Professional or its authorized service agents.

Installation, on-site service and maintenance can be provided worldwide by the Martin Professional Global Service organization and its approved agents, giving owners access to Martin’s expertise and product knowledge in a partnership that will ensure the highest level of performance throughout the product’s lifetime. Please contact your Martin® supplier for details.

Be aware that the output of LEDs, like all light sources, changes gradually over many thousands of hours of use. If you require products to perform to very precise color specifications, you may eventually need to make small readjustments at the lighting controller.

Cleaning

Regular cleaning is essential for fixture life and performance. Buildup of dust and dirt degrades the fixture’s light output and cooling ability.

Cleaning schedules will vary greatly depending on the operating environment. Inspect fixtures within their first few months of operation to see whether cleaning is necessary. Check again at regular intervals. This procedure will allow you to assess cleaning requirements in your particular situation.

Do not use products that contain solvents, abrasives or caustic agents for cleaning, as they can cause surface damage to the fixture. The aluminum housing and front glass can be cleaned with mild detergents such as those for washing cars.

To clean the housing and front glass:

1. Isolate the fixture from AC power and allow the fixture to cool for 20 minutes.
2. Visually check that the silicone seals and the power and data cables are in good condition. If any seal or cable shows signs of damage, cracking or loss of water resistance, stop cleaning the fixture and contact a Martin authorized service technician for replacement.
3. If seals are in good condition, rinse off loose dirt with a hose or low-pressure water spray.
4. Wash the aluminum housing and front glass using warm water with a little mild detergent and a soft brush or sponge. Do not use abrasive cleaners.
5. Rinse with clean water and wipe dry.

Installation safety

Each time the fixture is cleaned, check that the fixture and any accessories mounted on it are held securely and cannot fall. Check mounting fasteners and re-tighten if necessary.

Pressure relief valve

A valve with a permeable membrane between the cable entries on the back of the fixture (see illustration on right) equalizes pressure by allowing air to pass through it when the fixture heats up and cools down. At the same time, the valve acts as a barrier to water in liquid form. The expulsion of warm air (with a slightly higher water vapor content) and intake of cool air (with a slightly lower water vapor content) prevents humidity buildup over time, provided that the valve works correctly and that the fixture is correctly sealed.

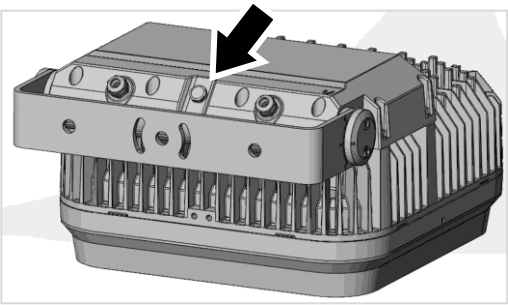

Pressure relief valves have a limited service life. They become blocked over time as the micropores in the membrane fill with particles. When a valve becomes blocked, excess pressure can damage seals or cause air and even water to be sucked into the fixture along cables. A blocked valve cannot be cleaned and must be replaced if it shows signs of contamination or is not in perfect condition. Valve

replacement involves pressure-testing the fixture and must be carried out by an authorized Martin service agent.

Firmware maintenance

Important! Do not switch the fixture off or disconnect the source of the firmware during an update, or the firmware will be corrupted.

You may need to install new fixture firmware if a new firmware version with new features is released, or in the unlikely event that firmware has become corrupted. Firmware updates can be downloaded automatically from the Martin cloud using the Martin Companion software suite on a PC connected to the Internet.

All fixtures that are powered on and connected via a DMX link to the fixture that you update will also have their firmware updated.

If you update firmware to a newer version, check the Exterior Wash Pro area of www.martin.com to see whether an updated version of the User Manual is available for the new firmware.

You need the following in order to install firmware:

- A Windows PC running the latest version of the Martin Companion software suite that is available for download from the Martin website at www.martin.com.
- The latest Exterior Wash Pro firmware files (Martin Companion automatically downloads these from the Martin fixture firmware cloud when you run it on a PC that is connected to the Internet).
- A Martin Companion Cable USB-DMX hardware interface (available from your Martin supplier).

To install the firmware in a fixture (or in multiple fixtures on the DMX link) using a Martin Companion Cable:

1. Apply power to the fixture(s) and wait until they have finished their startup procedure.
2. Connect the Martin Companion Cable's USB connector to a USB port on your PC. Connect the Martin Companion Cable's XLR connector to either the fixture's DMX IN connector or the DMX link.
3. Start the PC and launch Martin Companion. Check that the Martin Companion application correctly detects the Martin Companion Cable (a green dot should appear next to **USB Connected** in the top right-hand corner of the window).
4. Locate the latest Exterior Wash Pro firmware in Martin Companion's **Firmware** window.
5. Start the firmware update by clicking **Update Firmware** in Martin Companion. Do not disconnect the Martin Companion Cable or power off the fixture(s) until the upload is complete and the fixture(s) has successfully rebooted.
6. If you are updating multiple fixtures over a DMX link, check that they have all rebooted correctly.

Specifications

For full product specifications, see the Exterior Wash Pro area of the Martin website at www.martin.com.

FCC compliance

This equipment has been tested and found to comply with the limits for a Class B digital device, pursuant to part 15 of the FCC Rules. These limits are designed to provide reasonable protection against harmful interference in a residential installation. This equipment generates, uses and can radiate radio frequency energy and, if not installed and used in accordance with the instructions, may cause harmful interference to radio communications. However, there is no guarantee that interference will not occur in a particular installation. If this equipment does cause harmful interference to radio or television reception, which can be determined by turning the equipment off and on, the user is encouraged to try to correct the interference by one or more of the following measures:

- Reorient or relocate the receiving antenna.
- Increase the separation between the equipment and receiver.
- Connect the equipment into an outlet on a circuit different from that to which the receiver is connected.
- Consult the dealer or an experienced radio/TV technician for help.

FCC supplier's declaration of conformity declaration

This device complies with part 15 of the FCC Rules. Operation is subject to the following two conditions:

1. This device may not cause harmful interference, and
2. this device must accept any interference received, including interference that may cause undesired operation.

Canadian Interference-Causing Equipment Regulations – Règlement sur le Matériel Brouilleur du Canada

This Class B digital apparatus meets all requirements of the Canadian Interference-Causing Equipment Regulations.*Cet appareil numérique de la classe B respecte toutes les exigences du Règlement sur le Matériel Brouilleur du Canada.*

CAN ICES-003 (B) / NMB-003 (B); CAN ICES-005 (B) / NMB-005 (B)

EU Declaration of Conformity

An EU Declaration of Conformity covering this product is available for download from the Exterior Wash Pro area of the Martin website at www.martin.com.

Disposing of the product

Martin products are supplied in compliance with Directive 2012/19/EC of the European Parliament and of the Council of the European Union on WEEE (Waste Electrical and Electronic Equipment), where applicable.

Help preserve the environment! Ensure that this product is recycled at the end of its life. Your supplier can give details of local arrangements for the disposal of Martin products

Martin®

www.martin.com