Exterior Dot-1/4/9 Pro

User Manual

with Safety and Installation Manual

Exterior Dot-1 Pro

Exterior Dot-4 Pro

Exterior Dot-9 Pro

Martin®

Notes

Revision C of this manual corrects the information about using Double-string Cable Adapters on pages 5–6.

©2024-25 HARMAN PROFESSIONAL DENMARK ApS. All rights reserved. Features, specifications and appearance are subject to change without notice. HARMAN PROFESSIONAL DENMARK ApS and all affiliated companies disclaim liability for any injury, damage, direct or indirect loss, consequential or economic loss or any other loss occasioned by the use of, inability to use or reliance on the information contained in this document. Martin is a registered trademark of HARMAN PROFESSIONAL DENMARK ApS registered in the United States and/or other countries.

HARMAN PROFESSIONAL DENMARK ApS, Olof Palmes Allé 44, 8200 Aarhus N, Denmark
HARMAN PROFESSIONAL, INC., 8500 Balboa Blvd., Northridge CA 91325, USA

www.martin.com

Exterior Dot-1/4/9 Pro User Manual English, Revision C

Table of contents

Notes 2
Introduction 4
- Optional accessories 4
- Before using the product for the first time 4

System installation 5
System setup 8
- Setting up for P3 display 8
- Setting up for DMX control 8
- Setting up via RDM 9
- Device information 10
- Setting DMX mode 11
- Setting DMX addresses 11
- Dimming curves 11
- Pixel flip mode 11
- Standalone operation 12
- Behavior when no DMX signal is present 12
- Power limit mode 12
- LED refresh modes 12
- Color modes 12
- CTC 12
- Tint 13
- Dot string length 13
- Utilities 13

Using the Exterior Dot-1/4/9 Pro 14
- Temperature precautions and thermal regulation 14
- Power up confirmation flash 14
- P3 display 14
- DMX control 14
- Standalone operation 15
- FX 17

Maintenance 19
- Cleaning 19

DMX Protocols 20
- Standard Mode 21
- Extended Mode 21
- Direct Mode 23
- RGB Mode 24
- PixelMap Mode 24
- FX list 25

Specifications 36

Introduction

Thank you for selecting an Exterior Dot-1/4/9 Pro lighting system from Martin. This User Manual is a supplement to the Safety and Installation Manual that is supplied with products and attached to the back of this User Manual. The combined User Manual plus Safety and Installation Manual is available for download from the Exterior Dot-1/4/9 Pro area of the Martin website at www.martin.com. The User Manual contains information that is mainly of interest for lighting designers and operators, whereas the Safety and Installation Manual contains important information for all users, especially installers and technicians.

Before installing, operating or servicing the Exterior Dot-1/4/9 Pro, please check the Martin website at www.martin.com and make sure that you have the latest user documentation for the device and all other devices that you will include in the system. We recommend that you check the Martin website regularly for updated documentation. We publish revised versions each time we can improve the quality of the information we provide and each time we release new firmware with changes or new features. Each time we revise this manual we list any important changes on page 2 so that you can keep track of updates.

The output of LEDs, like all light sources, changes gradually over many thousands of hours of use. If you require products to perform to very precise color specifications, you may eventually need to make small readjustments at the lighting controller.

Not all product specifications are included in the device's user documentation. You can find full specifications for the device in the Exterior Dot-1/4/9 Pro area of the Martin website. The online specifications include information to help you order accessories such as cables, Feeders, P3 PowerPorts, external PSUs etc.

Optional accessories

The following are available from Martin as optional accessories in versions to suit Exterior Dot-1, Exterior Dot-4 and Exterior Dot-9 devices:

1. Diffuser dome
2. Anti-glare shield
3. Mounting bracket for surface-mounting
4. 2000 mm (78.75 in.) lengths of aluminum mounting profile with clip-in system for surface-mounting Exterior Dot-1/4/9 Pro devices in perfectly aligned rows
5. Wide range of cables, connectors and connector sealing caps.

See the Exterior Dot-1/4/9 Pro area of the Martin website at www.martin.com for details and ordering information.

Before using the product for the first time

1. Read the Safety and Installation Manual supplied with the product and included at the end of this User Manual before installing, operating or servicing the device.
2. Unpack the device. Please make sure to recycle packaging material.
3. Ensure that there is no transportation damage before using devices. Do not attempt to operate a damaged device.

System installation

Warning! Read the Exterior Dot-1/4/9 Pro Safety and Installation Manual included at the end of this User Manual before connecting Exterior Dot-1/4/9 Pro devices to DC power and data.

Warning! Connect the Exterior Dot-1/4/9 Pro only to the devices and using only the Martin cables specified in this User Manual and in the Exterior Dot-1/4/9 Pro Safety and Installation Manual.

Warning! Do not exceed the maximum numbers of devices that can be connected in chains and maximum cable lengths specified in the Exterior Dot-1/4/9 Pro Safety and Installation Manual and in the manuals of the other devices in the system.

Important! If using DMX, make sure that the DMX console and DC power source are at the same earth (ground) potential, or the data signal may become saturated.

Control protocols

The Exterior Dot-1/4/9 Pro is designed to display either Martin P3-controlled or DMX-controlled lighting effects. It automatically recognizes and responds to Martin P3, Art-Net, sACN and RDM via Art-Net and sACN data signals.

Creating an Exterior Dot-1/4/9 Pro display system

See the Exterior Dot-1/4/9 Pro User Manual and the detailed system diagrams available for download from www.martin.com for details of connecting and setting up an Exterior Dot-1/4/9 Pro system.

To install a system that displays P3 or DMX-controlled creative lighting effects on Exterior Dot-1/4/9 Pro devices:

1. Make sure that no devices in the installation can be connected to AC mains power until all installation work is complete.
2. Read the Safety and Installation Manual included at the end of this User Manual.
3. Connect Exterior Dot-1/4/9 Pro devices together in chains either directly using the hybrid DCE connectors on the devices' cable tails or by adding DCE-to-DCE hybrid extension cables with DCE connectors available from Martin.
4. Warning! Do not exceed the maximum number of devices per chain given in "Safety limits for connecting devices" in the Safety and Installation manual included at the end of this User Manual.
5. Install a blanking cap available from Martin on the output connector of the last Exterior Dot-1/4/9 Pro device on each chain to protect from water, dirt etc.

Data and DC power source

Connect the Exterior Dot-1/4/9 Pro to data and DC power at 15 volts from one of the following Martin devices only:

- Martin Exterior AC-Feeder connected to a data source and to AC mains power.
- Martin Exterior DC-Feeder connected to a data source and to hybrid 48 VDC power.

Follow the instructions in the user documentation of the Exterior AC-Feeder or Exterior DC-Feeder when connecting these devices.

Using Double-string Cable Adapters

You can use a Double-string Cable Adapter (available from your Martin supplier as an optional accessory) to split a string of Dots into two in a 'Y' configuration as shown in the diagrams on the following pages.

If you connect two strings together using a Double-string Cable Adapter, the safety limit for the total number of Dots per string given in the Safety and Installation Manual that is attached to the back of this User Manual applies to the total number of Dots on the two strings together. For example, for the Exterior Dot-1 Pro the maximum permitted number of Dots per string is 100. The maximum permitted

number of Dots on two strings connected using a Double-string Cable Adapter is still 100 in total – if one string contains 60 Dots, then the other string must contain no more than 40 Dots.

The Double-string Cable Adapter provides the following options:

- You can connect two Exterior Dot-1/4/9 strings in any combination to the adapter.
- On P3 and on Art-Net/sACN, both strings will show up as individual fixtures that can be mapped, patched and controlled individually.

The following limitations apply when using a Double-string Cable Adapter:

- Both strings must be patched to the same DMX universe. They can have different DMX start addresses but they must be in the same DMX universe.
- Synchronization imperfections may be visible with very fast or flashing content.
- Standalone programming is not supported.
- As mentioned above, the adapter does not increase the number of Dots that a Feeder can drive. The total number of Dots on two strings that are connected using a Double-string Cable Adapter must not exceed the maximum total number of Dots for one string given in the Exterior Dot-1/4/9 Pro Safety and Installation Manual that is included at the end of this User Manual.

Connections using an Exterior AC-Feeder

See illustration below. You can connect the Exterior AC-Feeder to AC mains power and to a P3 / Art-Net / sACN data signal either directly using the terminals inside the AC-Feeder or via a junction box and PDE hybrid (AC mains power and data) cable.

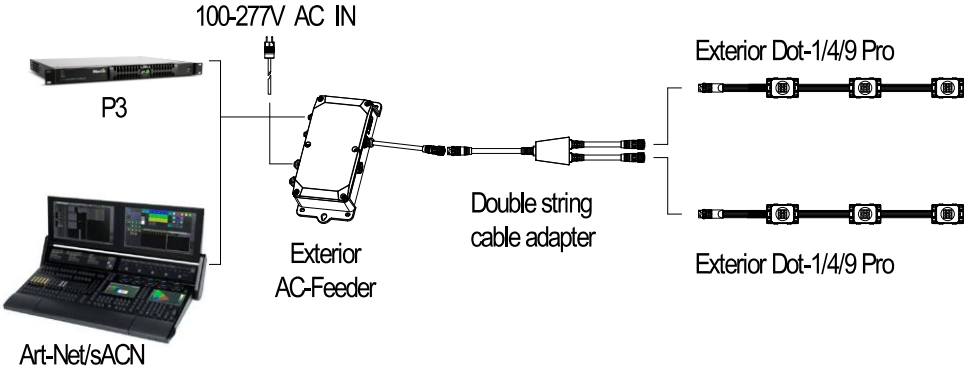

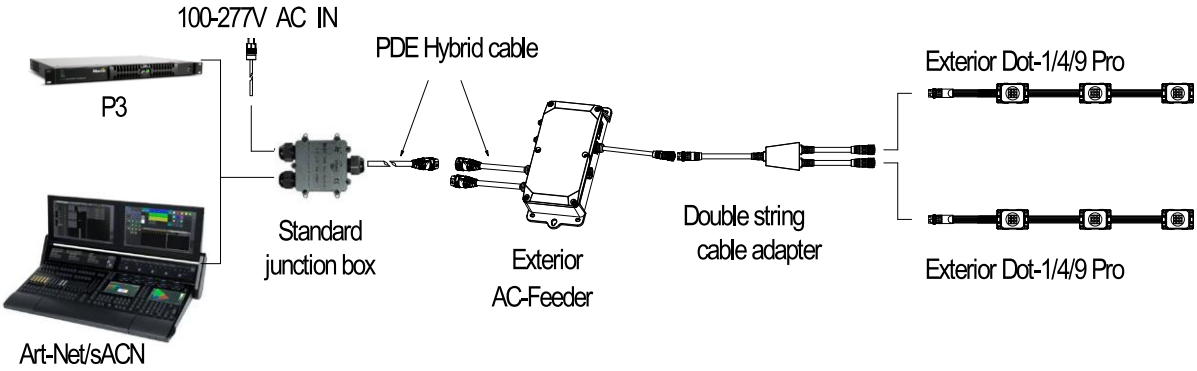

To use a Martin Exterior AC-Feeder to supply Exterior Dot-1/4/9 Pro devices with 15 VDC power and data:

1. Follow the instructions for connecting to power and data using the terminals inside the device that are given in the AC-Feeder / DC-Feeder Safety and Installation Manual. This manual is supplied with Feeders and available for download from the Martin website at www.martin.com.

2. Connect the string of Exterior Dot-1/4/9 Pro Dots to the output from the AC-Feeder. It is possible to split the string into two using the Y-shaped Double-string Cable Adapter available from Martin. There is a limit to the number of Dots you can connect to the output from one Exterior AC-Feeder – do not exceed the maximum number of Dots given in the Exterior Dot-1/4/9 Pro Safety and Installation Manual included at the end of this User Manual.

Connections using an Exterior DC-Feeder

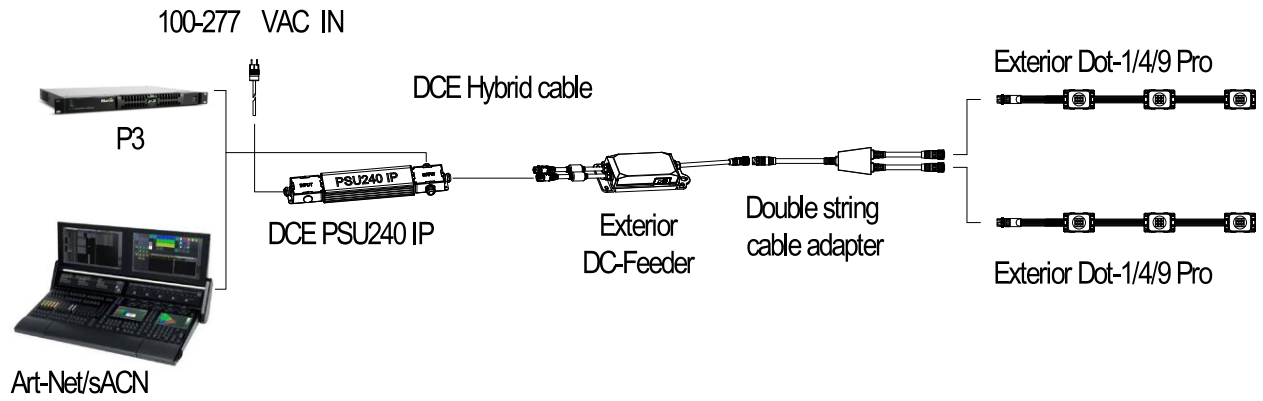

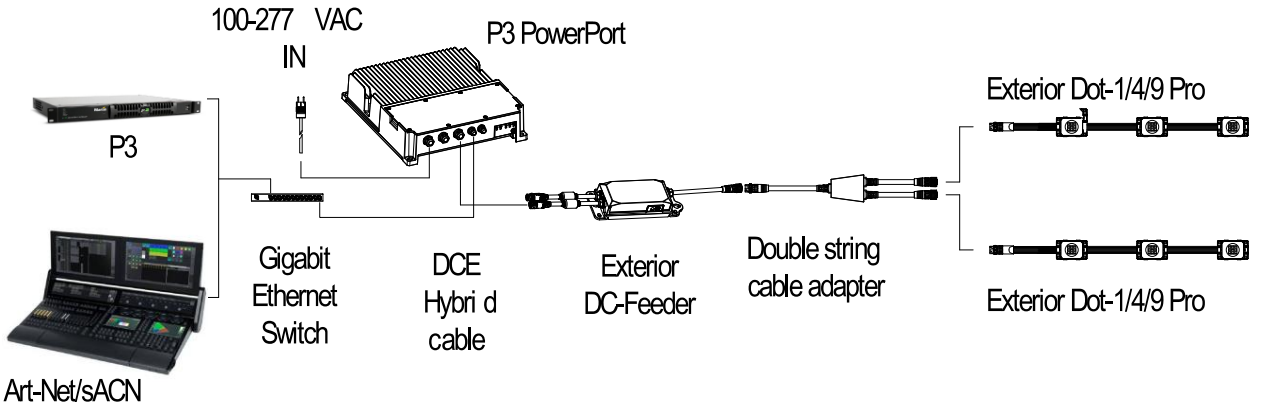

To use a Martin Exterior DC-Feeder to supply Exterior Dot-1/4/9 Pro devices with 15 VDC power and data:

1. See illustration above and see the Exterior DC-Feeder user manual supplied with the DC-Feeder and available for download from the Martin website at www.martin.com.
2. Connect the DC-Feeder to 48 VDC mains power and to a P3/Art-Net/sACN data signal from either:
   - a Martin P3 PowerPort via a DCE hybrid cable, or
   - a Martin DCE PSU 240 IP via a Y-shaped DCE hybrid adapter cable, or
   - a suitable generic external PSU via a Y-shaped DCE hybrid adapter cable.
3. Connect the string of Exterior Dot-1/4/9 Pro Dots to the output from the DC-Feeder. It is possible to split the string into two using a Y-shaped adapter cable available from Martin. Whether you connect one single string or a string that is split into two, there is a limit to the number of Dots you can connect to the output from one Exterior DC-Feeder – refer to the DC-Feeder Safety and Installation Manual to ensure you do not exceed the number of Dots allowed.

System setup

Warning! Read “Safety information” and “Precautions to avoid damage” in the Safety and Installation manual included at the end of this User Manual before applying power to an Exterior Dot-1/4/9 Pro installation.

Setting up for P3 display

A Martin P3 system allows video to be displayed on an installation that consists of or includes Exterior Dot-1/4/9 Pro Dots. When a P3 controller is connected to the installation and the installation is powered on, you can set up all the devices in the installation from the P3 controller. See the P3 controller user manual for details.

Setting up for DMX control

A DMX system gives 0 - 100% variable intensity control. Varying the intensity of red, blue and green LEDs in RGB products gives RGB color mixing. White LEDs are activated automatically.

For DMX operation, the Exterior Dot-1/4/9 Pro system is controlled using a DMX-over-Ethernet connection such as Art-Net or sACN.

You can set up and control an Exterior Dot-1/4/9 Pro installation over the data link using an RDM-compatible DMX controller. The controller must support RDM over an Ethernet connection.

DMX control channels

DMX controllers send control data to devices over DMX control channels in DMX universes. One DMX universe has 512 channels available. Multiple strings of Dots or individual Dots can share the same DMX channels if you want grouped control and identical Dot behavior.

The Exterior Dot-1/4/9 Pro can be controlled using any of the following five DMX modes (see “DMX protocols” on page 20):

- In **Standard Mode**, each string of Dots is controlled as one unit and uses six DMX channels.
- In **Extended Mode**, each string of Dots is controlled as one unit and uses twelve DMX channels.
- In **Direct Mode**, each string of Dots is controlled as one unit and uses four DMX channels.
- In **RGB Mode**, each string of Dots is controlled as one unit and uses three DMX channels.
- In **Pixelmap Mode**, Dots are grouped together into units (or segments) of selectable size. Each unit uses three DMX channels.

Different modes can be mixed in an installation. For example, some Exterior Dot-1/4/9 Pro Dots can be set to Standard Mode and others to Pixelmap Mode. Allocating DMX addresses and DMX channels in a mixed installation will require some planning.

It is possible to change the DMX mode of a string of Dots with an RDM command.

Setting up via RDM

Using an RDM-compliant DMX controller, you can communicate with the Exterior Dot-1/4/9 Pro Dots on the DMX data link via RDM. You can:

- Retrieve data from Dots
- Set the DMX addresses of the Dots and set their DMX mode
- Reset Dots

The Exterior Dot-1/4/9 Pro responds to the RDM parameter IDs (PIDs) listed in the table below:

RDM DISCOVERY
DISC_UNIQUE_BRANCH
DISC_MUTE
DISC_UN_MUTE

STATUS COLLECTION	**GET**	**SET**
QUEUED_MESSAGE	✓	
STATUS_MESSAGES	✓	
STATUS_ID_DESCRIPTION	✓	
CLEAR_STATUS_ID		✓

RDM INFORMATION	**GET**	**SET**
SUPPORTED_PARAMETERS	✓	
PARAMETER_DESCRIPTION	✓	

PRODUCT INFORMATION	**GET**	**SET**
DEVICE_INFO	✓	
DEVICE_MODEL_DESCRIPTION	✓	
MANUFACTURER_LABEL	✓	
DEVICE_LABEL	✓	✓
FACTORY_DEFAULTS	✓	✓

DMX SETUP	**GET**	**SET**
DMX_PERSONALITY	✓	✓
DMX_PERSONALITY_DESCRIPTION	✓	
DMX_START_ADDRESS	✓	✓
SLOT_DESCRIPTION	✓	

USAGE INFORMATION	GET	SET
DEVICE_HOURS	✓	✓
DEVICE_POWER_CYCLES	✓	✓

CONTROL	GET	SET
IDENTIFY_DEVICE	✓	✓
RESET_DEVICE		✓
PERFORM_SELFTEST	✓	✓
SELF_TEST_DESCRIPTION	✓	

PRESETS	GET	SET
CAPTURE_PRESET		✓
PRESET_PLAYBACK	✓	✓
MANUAL_MODE_OVERRIDE	✓	✓
PRESET_PLAYBACK_LIMIT	✓	✓
SYNCHRONIZED	✓	✓
OFFLINE_MODE	✓	✓

MARTIN CUSTOM	GET	SET
LOW_NOISE_MODE	✓	✓
COLOR_MODE	✓	✓
FIXTURE_ID	✓	✓
DIMMER_CURVE	✓	✓
VIDEO_TRACKING	✓	✓
PIXEL_FLIP_MODE	✓	✓
LOW_NOISE_LED_MODE	✓	✓
POWER_LIMIT_MODE	✓	✓
MANUAL_CTC_VALUE	✓	✓
MANUAL_TINT_VALUE	✓	✓
FIXTURE_LENGTH	✓	✓
SERIAL_NUMBER	✓	

Device information

Exterior Dot-1/4/9 Pro Dots can communicate the following information to the RDM controller:

- DEVICE_INFO, DEVICE_MODEL_DESCRIPTION and MANUFACTURER_LABEL give basic product information.
- DEVICE_LABEL provides information that can be edited by the user, providing a means of giving an individual Dot its own ID number, for example.

- DEVICE_HOURS gives the number of hours a string of Dots has had power applied since manufacture.
- DEVICE_POWER_CYCLES gives the number of on/off power cycles since manufacture.
- SERIAL_NUMBER is a factory-set serial number that cannot be changed.

Setting DMX mode

The DMX_PERSONALITY PID lets you set the DMX mode of the string of Dots. The different DMX modes available give you a range of options for DMX control.

Because DMX mode affects the number of DMX channels a Dot uses, it will affect the assignment of DMX addresses to strings of Dots. It is therefore a good idea to set the DMX mode of all the strings in the installation before you set their DMX addresses.

You can set the DMX mode of one string of Dots by sending a unicast RDM command to that one string only, or you can set the DMX mode of all the strings of Dots on the data link by sending a broadcast RDM command to all the strings.

Setting DMX addresses

To prepare an installation for DMX control, you set it up using an RDM-compliant DMX controller so that Dots or pixels receive instructions from the controller on their own DMX channels.

A string's DMX address is the first DMX channel it uses to receive control data. It uses this channel and the channels immediately above it. If a string has DMX address 001 and the string uses four DMX channels, it will use channels 001, 002, 003 and 004. DMX address 005 will be available as a DMX address for the next string on the data link. If this string also uses four DMX channels, the next available DMX address will be 009, and so on.

You can set the DMX address of one string by sending a unicast RDM command to that one string only, or you can set all the strings on the data link to the same DMX address by sending a broadcast RDM command to all the devices on the link. If all the strings have the same DMX address, they will behave identically and you will not be able to control any single string independently.

An example procedure might look like this, depending on which RDM controller you use:

1. Go to Scan → Properties → Advanced → Choose PID → SET DMX START ADDRESS.
2. Enter the DMX address that you want to give to the string (or give to all the strings if you are sending a broadcast command).
3. Confirm your selection.

Dimming curves

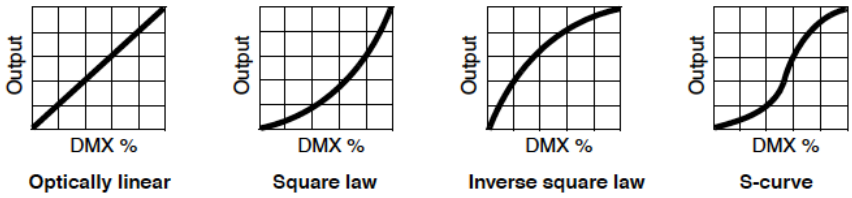

Four dimming curves are available via RDM using the DIMMER_CURVE PID:

- Optically linear – The increase in light intensity appears to be linear as DMX value is increased.
- Square law (default setting) – light intensity control is finer at low levels and coarser at high levels.
- Inverse square law – Light intensity control is coarser at low levels and finer at high levels.
- S-Curve – light intensity control is finer at low levels and high levels and coarser at medium levels.

Pixel flip mode

The PIXEL_FLIP_MODE command lets you reverse the order in which the Dots in a string are controlled. The first Dot becomes the last Dot etc.

Standalone operation

The Exterior Dot-1/4/9 Pro can be set to run in standalone operation using the Martin Companion Windows application. See ‘Standalone operation’ on page 15.

Standalone operation is only possible if no DMX/RDM signal is present. If you connect a DMX signal to Dots that are running a standalone show, they will stop standalone operation and respond to DMX control.

Behavior when no DMX signal is present

The OFFLINE_MODE command lets you define how a string of Dots behaves if power is applied but Dots are not receiving a DMX signal (or if Dots are powered on and being controlled by DMX, and then the DMX signal stops).

Four options are available:

- **Blackout** (default setting) – Intensity set to zero light output when no DMX signal is present.
- **Standalone** – Dot switches to standalone operation when no DMX signal is present. If you have programmed a scene or scenes via RDM and DMX, the Dots will display that scene when no DMX signal is present (see ‘Standalone operation’ on page 15).
- **Hold Last State** – Dots follow the last DMX values received.
- **Full Output** – All LEDs go to 100% intensity when no DMX signal is present.

Power limit mode

The POWER_LIMIT_MODE command lets you set a string of Dots to half or full power.

LED refresh modes

You can set the Exterior Dot-1/4/9 Pro to one of two refresh rates via RDM, Art-Net or P3:

- **Standard** refresh mode (default): 2002 Hz
- **High** refresh mode (for which the RDM PID is LOW_NOISE_MODE): 32032 Hz.

In High refresh mode, dimming is in 12-bit resolution. In Standard refresh mode, dimming is in 16-bit resolution.

For camera applications, we recommend using High refresh mode.

Color modes

The Exterior Dot 1/4/9 Pro has four color modes.

When a string of Dots is used in Direct DMX control mode, the color mode is always **Raw** – the color mode selection is ignored.

When a string of Dots is in Standard, Extended, RGB or Pixelmap DMX control mode, you can select from three color modes via RDM or P3:

- **Extended Gamut** (default setting) – The White point and mixed colors are calibrated, but you can saturate colors to the maximum level available. No brightness calibration is used, so you may observe minor brightness differences between individual dots.
- **Calibrated Color** – The entire color gamut is calibrated, resulting in a slight loss of color saturation. Additionally, the brightness of each dot is calibrated for best consistency, which results in reduced overall brightness.
- **Linear Video** – The entire color gamut is calibrated, resulting in a slight loss of color saturation. Additionally, the brightness of each dot is calibrated and adjusted so that the product behaves like a video screen. This results in reduced overall brightness and significantly reduced brightness of saturated colors.

CTC

The MANUAL_CTC_VALUE command lets you set a default color temperature for Dots when controlling them in a DMX Mode that does not offer CTC.

Tint

The MANUAL_TINT_VALUE command lets you adjust the tint of Dots.

Dot string length

The FIXTURE_LENGTH command lets you retrieve the length of a string of Dots as originally supplied. If you have shortened a string of Dots, you can use a SET command to write the new length to a string.

Utilities

The Exterior Dot-1/4/9 Pro offers various commands for managing Dots:

- If you apply an IDENTIFY_DEVICE command to a string of Dots, the string will flash a signal to let you know which string you are communicating with. This can be useful when setting up Dots in a large installation.
- RESET_DEVICE – Carries out a full reset of all the Dots' electronics.
- SELF_TEST_DESCRIPTION – Lets you select from various sequences that test the Dots' functionality and LEDs.
- PERFORM_SELFTEST – Runs a test sequence.
- FACTORY_DEFAULTS – Deletes any custom settings that have been configured via RDM and returns a Dot string to its factory default settings.

Using the Exterior Dot-1/4/9 Pro

Warning! Read “Safety information” and “Precautions to avoid damage” in the Safety and Installation manual included at the end of this User Manual before applying power to an Exterior Dot-1/4/9 Pro installation.

Temperature precautions and thermal regulation

Do not operate the Exterior Dot-1/4/9 Pro in an ambient temperature lower than -30° C (-22° F) or higher than the specified maximum of 55° C (131° F)

The Exterior Dot-1/4/9 Pro Dot has a protective thermal shutdown feature that blacks out the Dot if it exceeds its permitted maximum operating temperature.

To avoid unexpected blackouts due to thermal shutdowns but also avoid overheating that may damage the product, the Exterior Dot-1/4/9 Pro offers various options for managing temperature:

- At excessive temperatures, Exterior AC-Feeder or Exterior DC-Feeder devices will gradually regulate the output to the Dots and eventually fully shut down. The Feeder and the connected Dots will function normally again when the temperature has fallen to a safe level.
- During P3 video operation, you can enable the thermal regulation feature available in the software of all Martin P3 system controllers. When this feature is active, Exterior Dot-1/4/9 Pro Dots begin to reduce their light output when the ambient temperature reaches 45° C in order to control Dot temperature. Output is reduced gradually as the ambient temperature rises above 45° C. Dots will still light at the maximum ambient temperature of 55° C, but output will be considerably reduced. This option avoids blackouts due to protective thermal shutdowns. Thermal throttling at the P3 system controller allows output control of the entire installation, so all Dots will have the same brightness when running at reduced output.
- During P3 video operation, you can disable the P3 controller thermal regulation feature. If you choose to do this, Exterior Dot-1/4/9 Pro Dots will not reduce their light output when the ambient temperature reaches 45°C, but if you drive Dots hard when the ambient temperature approaches or exceeds 55° C, Dots may black out completely due to protective thermal shutdown.
- During DMX operation, the Exterior Dot-1/4/9 Pro Dots begin to reduce their light output when the ambient temperature reaches 45° C in order to control Dot temperature. Output is reduced gradually as the ambient temperature rises above 45° C. Dots will still light at the maximum ambient temperature of 55° C, but output will be considerably reduced. This option avoids blackouts due to protective thermal shutdowns.

Power up confirmation flash

The Exterior Dot-1/4/9 Pro flashes once to confirm that power is applied in the following situations:

- The first time you power up and each time you power Dots off and then on again.
- When you hot-plug a string of Dots to an Exterior AC-Feeder or Exterior DC-Feeder.
- When Dots awake from hibernation.

P3 display

The Exterior Dot-1/4/9 Pro can display video from all common video sources. The video signal must be sent to a Martin P3 System Controller and then distributed to Dots. The P3 System Controller lets you map, configure and control an installation containing Exterior Dot-1/4/9 Pro Dots (and other Martin P3 video display products if you have them). See the P3 System Controller documentation for details.

DMX control

The Exterior Dot-1/4/9 Pro can display effects controlled by DMX. See “DMX protocols” on page 20 for full details of DMX control.

An RDM-compatible DMX controller is required so that you can address and configure the Dots. See the DMX/RDM controller documentation for details.

Five DMX modes are available:

- **Standard Mode**: offers RGB control of an entire string of Dots with white added automatically. Standard Mode also offers an overall 16-bit dimmer and a CTC control channel.
- **Extended Mode**: as Standard Mode but also adds Shutter, Virtual Color wheel, P3 mix and FX pattern macros.
- **Direct Mode**: Direct RGBW control of the red, green blue and white LEDs in an entire string of Dots.
- **RGB Mode**: RGB control of an entire string of Dots. White is added automatically.
- **Pixelmap Mode**: Dots in a string are grouped together into blocks which are controlled via RGB. White is added automatically.

Standalone operation

The Exterior Dot-1/4/9 Pro may be configured with a stand-alone color or sequence of colors which it will display when no other control data is being received. Configuration is carried out via RDM using the Martin Companion Windows application.

To set up standalone operation:

1. Run a **Discover** command to obtain a list of connected Dots.

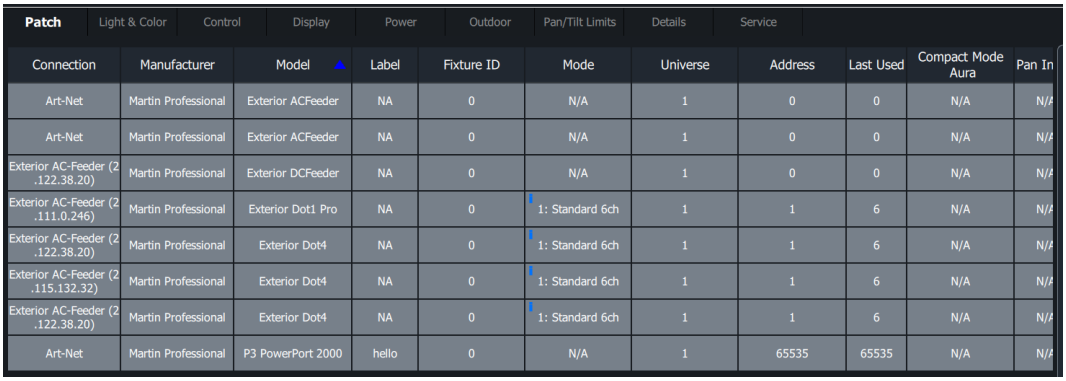

Connection	Manufacturer	Model	Label	Fixture ID	Mode	Universe	Address	Last Used	Compact Mode Aura	Pan In
Art-Net	Martin Professional	Exterior ACFeeder	NA	0	N/A	1	0	0	N/A	N/A
Art-Net	Martin Professional	Exterior ACFeeder	NA	0	N/A	1	0	0	N/A	N/A
Exterior AC-Feeder (2 .122.38.20)	Martin Professional	Exterior DCFeeder	NA	0	N/A	1	0	0	N/A	N/A
Exterior AC-Feeder (2 .111.0.246)	Martin Professional	Exterior Dot1 Pro	NA	0	1: Standard 6ch	1	1	6	N/A	N/A
Exterior AC-Feeder (2 .122.38.20)	Martin Professional	Exterior Dot4	NA	0	1: Standard 6ch	1	1	6	N/A	N/A
Exterior AC-Feeder (2 .115.132.32)	Martin Professional	Exterior Dot4	NA	0	1: Standard 6ch	1	1	6	N/A	N/A
Exterior AC-Feeder (2 .122.38.20)	Martin Professional	Exterior Dot4	NA	0	1: Standard 6ch	1	1	6	N/A	N/A
Art-Net	Martin Professional	P3 PowerPort 2000	hello	0	N/A	1	65535	65535	N/A	N/A

2. Select the Dot that you want to program in the **Standalone** section.

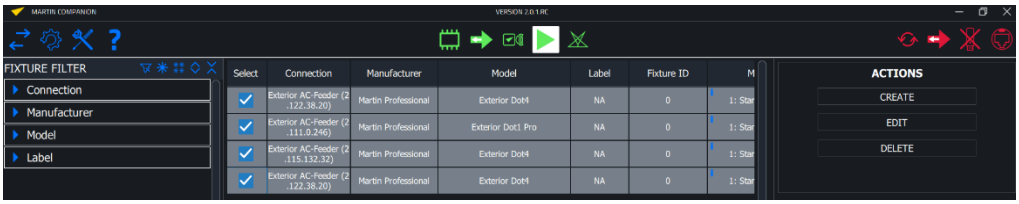

3. Create the first scene using the control faders.

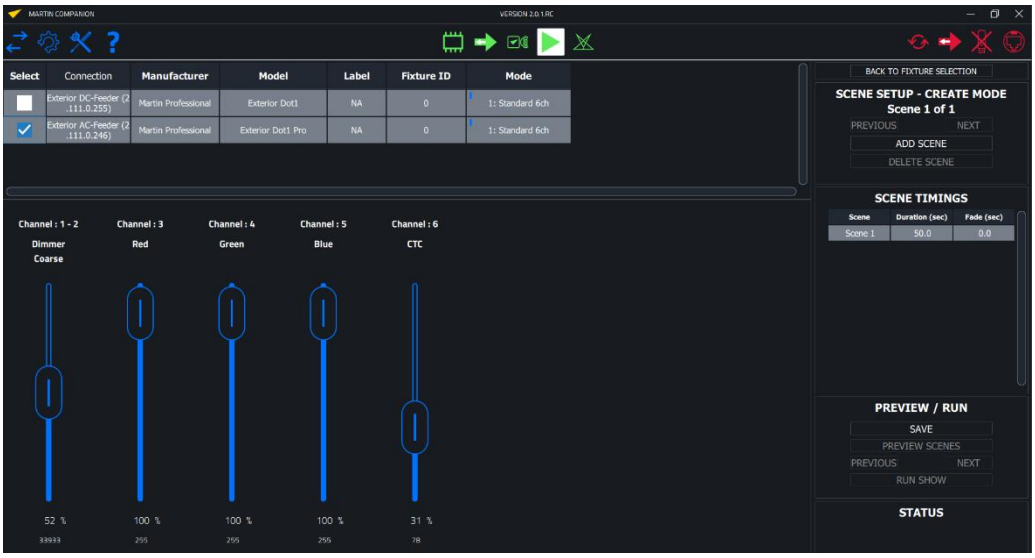

4. Add scenes if you want to create a sequence.

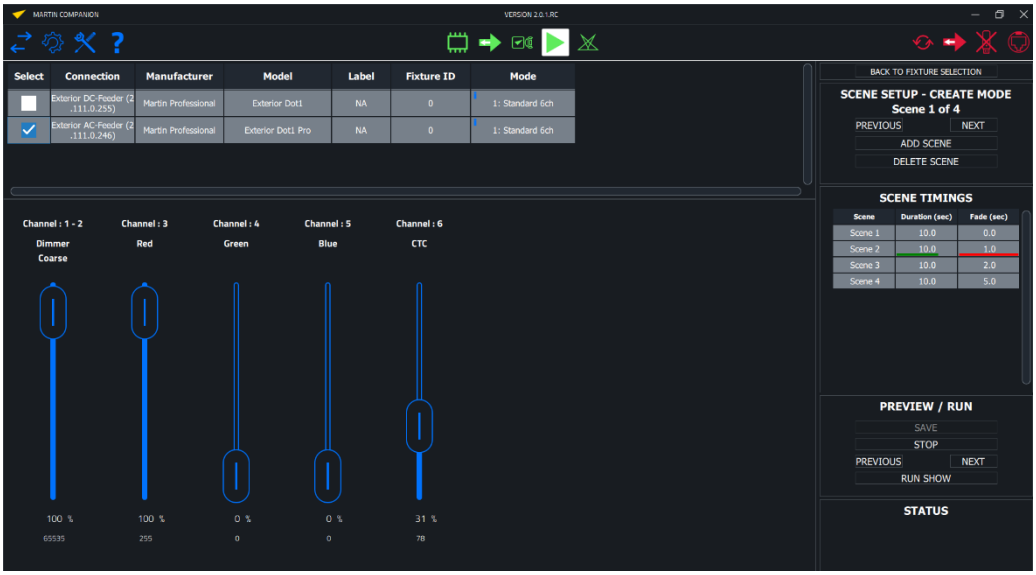

5. Run the standalone show.

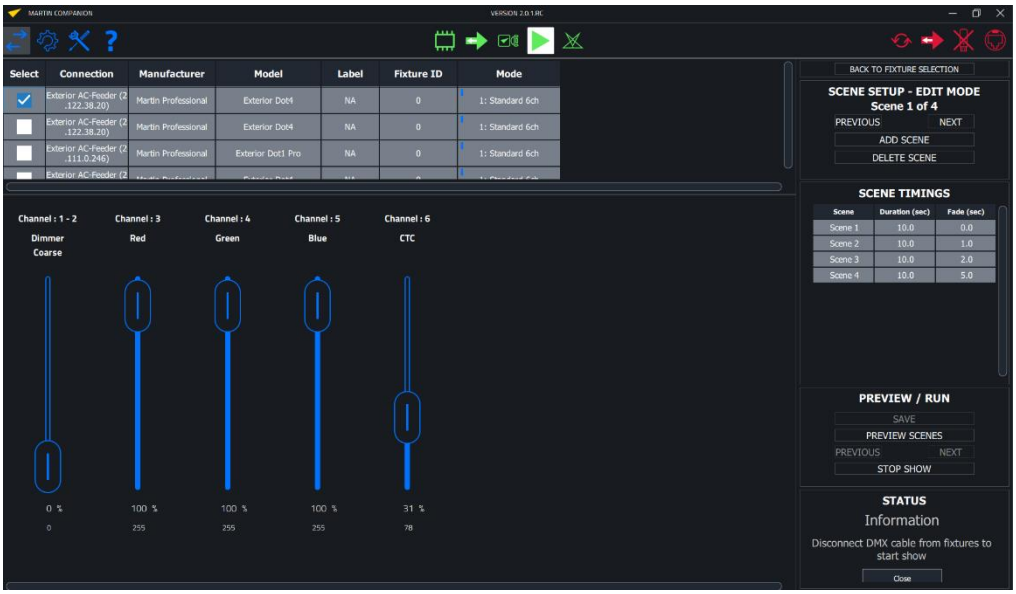

Half-power mode

A half-power mode setting is available in Martin P3 PowerPort 500 IP, P3 PowerPort 2000 IP and Exterior AC-Feeder devices as well as in Martin P3 System Controllers and via RDM. Setting Dots to half power can be useful for night-time or TV studio applications, for example, where full power is not needed or may be undesirable. The HALF setting also lets you connect a higher number of Dots, meaning that an installation will require fewer system components.

FX

The Exterior Dot-1/4/9 Pro offers a range of FX (pre-programmed macros) as outlined below:

FX type	Description	Number of effects	Color Adjustments	FX Adjust (speed/ direction)	FX Synchro-nization (offsetting)
Intensity	**Intensity effects on entire string** Controls Exterior Dot-1/4/9 Pro as one string	13	• RGB or P3 sets foreground color • Virtual color wheel sets background color	X	X
Pixel Intensity	**Intensity effects on individual pixel** Individual control of each Dot on a string	119	• RGB or P3 sets foreground color • Virtual color wheel sets background color	X	X
Overlay	**Overlay effects on individual pixel** Individual control of each Dot on a string	26	• Overlay color white or set by virtual color wheel • Overlayed on normal output by RGB or P3	X	X
Color Effect	**Color effects on individual pixel** Individual control of each Dot on a string	51	• Predefined color effects • Ignores P3 or DMX colors	X	X
Color Modifier	**Color modification on individual pixel** Individual control of each Dot on a string	13	• Takes DMX or P3 colors and modifies them	Degree of color offset	X
Video SloMo	**Output of LEDs is average of last x frames** Same effect on all Exterior Dot Pros	1		Number of frames to average	No function

Pixelmasks	**Mask out pixels according to pixel mask table** Individual control of each Dot on a string	256	• RGB or P3 sets color for “On pixels” • Color wheel sets color for “OFF pixels”	Selects Pixel mask combination	No function
Color looks	**256 predefined color looks according to ColorLooks table** Individual control of each Dot on a string	256	• Predefined color effects • Ignores P3 or DMX colors	Selects Colormask combination	No function

Latency

When using Double-String Cable Adapters, there is a risk of some latency when running high-demand video (very fast flashes, for example). Content may not be perfectly synchronized between strings with and without Double-String Cable Adapters.

Maintenance

Warning! Read ‘Safety information’ in the Safety and Installation Manual included at the end of this User Manual before carrying out service or maintenance. There are no user-serviceable parts inside. Do not open the housing. Refer any service operation not described in this manual to Martin Professional or its authorized service agents.

Installation, on-site service and maintenance can be provided worldwide by the Martin Professional Global Service organization and its approved agents, giving owners access to Martin’s expertise and product knowledge in a partnership that will ensure the highest level of performance throughout the product’s lifetime. Please contact your Martin supplier for details.

Cleaning

Regular cleaning is essential for service life and performance. Buildup of dust and dirt will reduce the Exterior Dot-1/4/9 Pro’s light output and cooling ability.

Cleaning schedules will vary greatly depending on the operating environment. It is therefore impossible to specify precise cleaning intervals for the Exterior Dot-1/4/9 Pro. Inspect devices after a short period of operation to see whether cleaning is necessary. Check again at frequent intervals. This procedure will allow you to assess cleaning requirements in your particular situation. If in doubt, consult your Martin dealer about a suitable maintenance schedule.

Do not use products that contain solvents, abrasives or caustic agents for cleaning, as they can cause surface damage. The aluminum housing and front glass can be cleaned with mild detergents such as those for washing cars.

To clean the Exterior Dot-1/4/9 Pro:

4. Isolate the installation from power and allow the device to cool for 20 minutes.
5. Visually check that Dots, seals and cables are in good condition. If any seal or cable shows signs of damage, cracking or loss of water resistance, stop cleaning the device and contact a Martin authorized service technician for replacement.
6. Rinse off loose dirt with a hose or low-pressure water spray.
7. Wash the Dots using warm water with a little mild detergent and a soft brush or sponge. Do not use abrasive cleaners.
8. Rinse with clean water and wipe dry.

DMX Protocols

The following modes are available for controlling the Dots by DMX.

DMX Mode	DMX channels	Functions
Standard	6	16-bit dimmer + 8-bit RGB + 8-bit CTC
Extended	12	Adds shutter, color wheel, P3 mix and FX macros to Standard Mode
Direct	4	Direct RGBW control of entire string
RGB	3	One set of RGB channels for entire string
PixelMap		
Blocks of 16 Dots	Up to 21	One set of RGB channels for every block of 16 Dots (maximum number of channels is for the Dot-1 – 100 Dots = 7 blocks)
Blocks of 8 Dots	Up to 39	One set of RGB channels for every block of 8 Dots (maximum number of channels is for the Dot-1 – 100 Dots = 13 blocks)
Blocks of 4 Dots	Up to 75	One set of RGB channels for every block of 4 Dots (maximum number of channels is for the Dot-1 – 100 Dots = 25 blocks)
Blocks of 2 Dots	Up to 150	One set of RGB channels for every block of 2 Dots (maximum number of channels is for the Dot-1 – 100 Dots = 50 blocks)
Individual Dots	Up to 300	One set of RGB channels for every single Dot (maximum number of channels is for the Dot-1 – 100 Dots = 100 pixels)

Standard Mode

Channel	Resolution	Value	Function	Fade	Default Value
1, 2	16-bit	0-65535	**Dimmer** Closed → Open	Fade	0
3	8-bit	0-255	**Red** 0 → 100%	Fade	255
4	8-bit	0-255	**Green** 0 → 100%	Fade	255
5	8-bit	0-255	**Blue** 0 → 100%	Fade	255
6	8-bit	0-34 35 36 … 78 … 128 … 255	**CTC (Color Temperature Control)** *1800 K to 12850 K in 50 K steps* 1800 K 1850 K 1900 K … 4000 K … 6500 K … 12850 K	Fade	78

Tint defaults to zero but can be changed using RDM.

Extended Mode

Channel	Resolution	Value	Function	Fade	Default Value
1	8-bit	0-19 20-49 50-200 201-210 211-255	**Strobe/Shutter** Shutter closed Shutter open Strobe slow → fast Shutter open Random strobe slow → fast	Snap	30
2, 3	16-bit	0-65535	**Dimmer** Closed → Open	Fade	0
4	8-bit	0-255	**Red** 0 → 100%	Fade	255
5	8-bit	0-255	**Green** 0 → 100%	Fade	255
6	8-bit	0-255	**Blue** 0 → 100%	Fade	255
7	8-bit	0-34 35 36 … 78 … 128 … 255	**CTC (Color Temperature Control)** *1800 K to 12850 K in 50 K steps* 1800 K 1850 K 1900 K … 4000 K … 6500 K … 12850 K	Fade	78

			Virtual color wheel		
		0 - 10	Open		
			Solid colors		
		11-12	Moroccan Pink (LEE 790)		
		13-14	Pink (LEE 157)		
		15-16	Special Rose Pink (LEE 332)		
		17-18	Follies Pink (LEE 328)		
		19-20	Fuchsia Pink (LEE 345)		
		21-22	Surprise Pink (LEE 194)		
		23-24	Congo Blue (LEE 181)		
		25-26	Tokyo Blue (LEE 071)		
		27-28	Deep Blue (LEE 120)		
		29-30	Just Blue (LEE 079)		
		31-32	Medium Blue (LEE 132)		
		33-34	Double CT Blue (LEE 200)		
		35-36	Slate Blue (LEE 161)		
		37-38	Full CT Blue (LEE 201)		
		39-40	Half CT Blue (LEE 202)		
		41-42	Steel Blue (LEE 117)		
		43-44	Lighter Blue (LEE 353)		
		45-46	Light Blue (LEE 118)		
		47-48	Medium Blue Green (LEE 116)		
		49-50	Dark Green (LEE 124)		
		51-52	Primary Green (LEE 139)		
		53-54	Moss Green (LEE 089)		
		55-56	Fern Green (LEE 122)		
		57-58	Jas Green (LEE 738)		
		59-60	Lime Green (LEE 088)		
		61-62	Spring Yellow (LEE 100)		
		63-64	Deep Amber (LEE 104)		
8	8-bit	65-66	Chrome Orange (LEE 179)	Snap	0
		67-68	Orange (LEE 105)		
		69-70	Gold Amber (LEE 021)		
		71-72	Millennium Gold (LEE 778)		
		73-74	Deep Golden Amber (LEE 135)		
		75-76	Flame Red (LEE 164)		
		77-78	Red Magenta (LEE 113)		
		79-80	Medium Lavender (LEE 343)		
		81-82	Pure White (White LEDs only)		
		83-84	Pure Red (Red LEDs only)		
		85-86	Pure Yellow (Red + Green LEDs only)		
		87-88	Pure Green (Green LEDs only)		
		89-90	Pure Cyan (Green + Blue LEDs only)		
		91-92	Pure Blue (Blue LEDs only)		
		93-94	Pure Magenta (Blue + Red LEDs only)		
		95-96	Peacock Blue (LEE 115)		
		97-98	Dark Lavender (LEE 180)		
		99-100	Double CT Orange (LEE 287)		
		101-102	Full CT Orange (LEE 204)		
		103-104	Half CT Orange (LEE 205)		
		105-106	Deep Straw (LEE 015)		
		107 - 190	No function		
			Continuous rotation		
		191 - 214	CW, Fast → Slow		
		215 - 219	Stop (wheel stops at current color)		
		220 - 243	CCW, Slow → Fast		
			Random slots		
		244 - 247	Fast		
		248 - 251	Medium		
		252 - 255	Slow		

Channel	Resolution	Value	Function	Fade	Default Value
9	8-bit	0 - 26 27 - 228 229 - 255	**P3 Mix** DMX Mode Color of LEDs is fully controlled by DMX channels, P3 pixel data is ignored Mix Mode At the bottom of the range (27), the output is pure DMX-controlled. In-between there is a crossfade between DMX and P3 Pixels At the top of the range (228), the output is pure P3 pixel-controlled Video Mode Color of LEDs is controlled by P3 pixels multiplied with DMX channels. This allows the DMX channels to "color" the P3 pixel data	Snap	0
10	8-bit	0 - 255	**FX (see 'FX list' on page 25)** FX selection 1 -255	Snap	0
11	8-bit	0 - 126 127 - 128 129 - 255	**FX Adjust** Reversed fast → slow Stop Forwards slow → fast	Fade	128
12	8-bit	0 1 – 35 36 37 - 100 101 - 120 121 - 140 141 - 255	**FX Synchronization** No sync Dot offset (Shift from 10 – 350 degrees) Synchronized No function Random start Random duration No function	Snap	36

Direct Mode

Channel	Resolution	Value	Function	Fade	Default Value
1	8-bit	0-255	**Red** 0 → 100%	Fade	0
2	8-bit	0 -255	**Green** 0 → 100%	Fade	0
3	8-bit	0-255	**Blue** 0 → 100%	Fade	0
4	8-bit	0-255	**White** 0 → 100%	Fade	0

RGB Mode

Channel	Resolution	Value	Function	Fade	Default Value
1	8-bit	0-255	**Red** 0 → 100%	Fade	0
2	8-bit	0 -255	**Green** 0 → 100%	Fade	0
3	8-bit	0-255	**Blue** 0 → 100%	Fade	0

PixelMap Mode

In PixelMap Mode, Dots are controlled in blocks of selectable size. Each block is controlled using three channels (Red, Green and Blue).

PixelMap, Blocks of 16	Up to 21 DMX channels	Maximum = 7 blocks (Dot-1, 100 Dots)
PixelMap, Blocks of 8	Up to 39 DMX channels	Maximum = 13 blocks (Dot-1, 100 Dots)
PixelMap, Blocks of 4	Up to 75 DMX channels	Maximum = 25 blocks (Dot-1, 100 Dots)
PixelMap, Blocks of 2	Up to 150 DMX channels	Maximum = 50 blocks (Dot-1, 100 Dots)
PixelMap per Pixel	Up to 300 DMX channels	Maximum = 100 individually controlled Dots (Dot-1, 100 Dots)

Channel	Resolution	Value	Function	Fade	Default Value
1 - xxx	8-bit	0-255	**Multiple sets of RGB for segment control** 0 → 100%	Fade	0

FX list

The table below lists the FX patterns available in Extended DMX Mode.

Type	DMX	Name	Description	Comments
	0	No FX		
Intensity All	1	Strobe Width	When strobe is activated on channel 1, and this effect is active, the FX speed channel controls the width of the strobe pulses / on time (128 = standard strobe pulse width, 0-127 = shorter strobe pulse width, 129-255 = longer strobe pulse width)	No background color
	2	Blackout Strobe	Full Blackout Strobe	RGB, P3 & Pixels set "normal output", while Color Wheel sets "background"
	3	2x Strobe	Full 2x Strobe	
	4	3x Strobe	Full 3x Strobe	
	5	4x Strobe	Full 4x Strobe	
	6	Up, Down, Flash	Full Up-Down-Flash	
	7	Up, Down, Flash Second Color	Full Up-Down-Flash Second Color	
	8	Up, Flash, Down, Flash	Full Up-Flash-Down-Flash	
	9	Up, Flash, Down, Flash Second Color	Full Up-Flash-Down-Flash Second Color	
	10	Random Levels	Full Random Levels	RGB, P3 & Pixels set "normal output", while Color Wheel sets "background" - If random intensity hits 0, the background color is shown
	11	Movie Flicker	Full	RGB, P3 & Pixels set "normal output", while Color Wheel sets "background"
	12	Atomic Lighting	Full	
	13	Thunderstorm	Full	
	14 … 18	No FX		
Intensity Pixels	19	PixelKiller Static	LEDs PixelKiller	RGB, P3 & Pixels set "normal output", while Color Wheel sets "background"
	20	SparkleStars	LEDs Sparkle Overlay (random twinkling of individual LEDs)	
	21	SparkleStars Heavy	Same as SparkleStars but with more LEDs active at same time	
	22	Lightning Flashes Random	LEDs flashing random like lightning	

Intensity Pixels	23	Lightning Flashes Random Heavy	More LEDs flashing random like lightning	RGB, P3 & Pixels set "normal output", while Color Wheel sets "background"
	24	Lightning Flashes Linear	LEDs flashing linear like lightning	
	25	Lightning Flashes Linear Heavy	LEDs flashing linear like lightning	
	26	Fiberoptic	Fiber optic effect	
	27	Noise	LEDs Noise Overlay	
	28	Build Up/Down Step	LEDs Build Up and Down	
	29	Build Up/Down Fade	LEDs Build Up and Down	
	30	Build Up/Down Random Step	LEDs Build Up and Down	
	31	Build Up/Down Random Fade	LEDs Build Up and Down	
	32	Random 5% Step	LED Random Chase Step with always 5% on	
	33	Random 5% Fade	LED Random Chase Fade with always 5% on	
	34	Random 10% Step	LED Random Chase Step with always 10% on	
	35	Random 10% Fade	LED Random Chase Fade with always 10% on	
	36	Random 20% Step	LED Random Chase Step with always 20% on	
	37	Random 20% Fade	LED Random Chase Fade with always 20% on	
	38	Random 40% Step	LED Random Chase Step with always 40% on	
	39	Random 40% Fade	LED Random Chase Fade with always 40% on	
	40	Random 80% Step	LED Random Chase Step with always 80% on	
	41	Random 80% Fade	LED Random Chase Fade with always 80% on	
	42	Split Static	Split string of Dots in half and use FX Speed to index the split-line	RGB, P3 & Pixels set one half, while Color Wheel (or black) sets the other half
	43	Split Bounce Step	Split string of Dots in half and use FX Speed to bounce the split-line continuously	
	44	Split Bounce Fade	Split string of Dots in half and use FX Speed to bounce the split-line continuously	
	45	Odd-Even 1-2 Step	Pixel mask 0 vs 1	RGB, P3 & Pixels set "normal output", while Color Wheel sets "background"
	46	Odd-Even 1-2 Fade	Pixel mask 0 vs 1	

Intensity Pixels	47	Odd-Even 2-4 Step	Pixel mask 8 vs 10	RGB, P3 & Pixels set "normal output", while Color Wheel sets "background"
	48	Odd-Even 2-4 Fade	Pixel mask 8 vs 10	
	49	Odd-Even 4-8 Step	LED 1-4/9-12/… vs LED 5-8/13-16/…	
	50	Odd-Even 4-8 Fade	LED 1-4/9-12/… vs LED 5-8/13-16/…	
	51	1-4 Chase Step	Pixel mask 4 thru 7	
	52	1-4 Chase Fade	Pixel mask 4 thru 7	
	53	2-4 Chase Step	Pixel mask 8 thru 11	
	54	2-4 Chase Fade	Pixel mask 8 thru 11	
	55	1-10_8_9 Chase Step	Pixel mask 12 thru 21	
	56	1-10_8_9 Chase Fade	Pixel mask 12 thru 21	
	57	1-10_8_9 Chase Mirror Step	Pixel mask 22 thru 31	
	58	1-10_8_9 Chase Mirror Fade	Pixel mask 22 thru 31	
	59	5_4_4-10_8_9 Chase Step	Pixel mask 32 thru 41	
	60	5_4_4-10_8_9 Chase Fade	Pixel mask 32 thru 41	
	61	5_4_4-10_8_9 Chase Mirror Step	Pixel mask 42 thru 51	
	62	5_4_4-10_8_9 Chase Mirror Fade	PixelMask 42 thru 51	
	63	1-20_16_18 Chase Step	PixelMask 52 thru 71	
	64	1-20_16_18 Chase Fade	PixelMask 52 thru 71	
	65	10_8_9-20_16_18 Chase Step	PixelMask 72 thru 91	
	66	10_8_9-20_16_18 Chase Fade	PixelMask 72 thru 91	
	67	4-100_64_36 Chase Step	PixelMask 92 thru 116	
	68	4-100_64_36 Chase Fade	PixelMask 92 thru 116	

Intensity Pixels	69	10_8_9-100_64_36 Chase Step	PixelMask 117 thru 141	RGB, P3 & Pixels set "normal output", while Color Wheel sets "background"
	70	10_8_9-100_64_36 Chase Fade	PixelMask 117 thru 141	
	71	10_8_9-100_64_36 Chase Mirror Step	PixelMask 142 thru 166	
	72	10_8_9-100_64_36 Chase Mirror Fade	PixelMask 142 thru 166	
	73	Block of 25_16_9 Step	Block of 25 LEDs (Dot-1) / Block of 16 LEDs (Dot-4) / Block of 9 LEDs (Dot-9) chase	
	74	Block of 25_16_9 Fade	Block of 25 LEDs (Dot-1) / Block of 16 LEDs (Dot-4) / Block of 9 LEDs (Dot-9) chase	
	75	Block of 25_16_9 Step Random	Block of 25 LEDs (Dot-1) / Block of 16 LEDs (Dot-4) / Block of 9 LEDs (Dot-9) chase random order	
	76	Block of 25_16_9 Fade Random	Block of 25 LEDs (Dot-1) / Block of 16 LEDs (Dot-4) / Block of 9 LEDs (Dot-9) chase random order	
	77	Block of 10_8_4 Step	Block of 10 LEDs (Dot-1) / Block of 8 LEDs (Dot-4) / Block of 4 LEDs (Dot-9) chase	
	78	Block of 10_8_4 Fade	Block of 10 LEDs (Dot-1) / Block of 8 LEDs (Dot-4) / Block of 4 LEDs (Dot-9) chase	
	79	Block of 10_8_4 Step Random	Block of 10 LEDs (Dot-1) / Block of 8 LEDs (Dot-4) / Block of 4 LEDs (Dot-9) chase random order	
	80	Block of 10_8_4 Fade Random	Block of 10 LEDs (Dot-1) / Block of 8 LEDs (Dot-4) / Block of 4 LEDs (Dot-9) chase random order	
	81	Block of 5_4_2 Step	Block of 5 LEDs (Dot-1) / Block of 4 LEDs (Dot-4) / Block of 2 LEDs (Dot-9) chase	
	82	Block of 5_4_2 Fade	Block of 5 LEDs (Dot-1) / Block of 4 LEDs (Dot-4) / Block of 2 LEDs (Dot-9) chase	
	83	Block of 5_4_2 Step Random	Block of 5 LEDs (Dot-1) / Block of 4 LEDs (Dot-4) / Block of 2 LEDs (Dot-9) chase random order	

Intensity Pixels	84	Block of 5_4_2 Fade Random	Block of 5 LEDs (Dot-1) / Block of 4 LEDs (Dot-4) / Block of 2 LEDs (Dot-9) chase random order	RGB, P3 & Pixels set "normal output", while Color Wheel sets "background"
	85	Snake 1 LED Step	1 LED running around	
	86	Snake 1 LED Fade	1 LED running around	
	87	Snake 2 LED Step	2 LEDs running around	
	88	Snake 2 LED Fade	2 LEDs running around	
	89	Snake 4 LED Step	4 LEDs running around	
	90	Snake 4 LED Fade	4 LEDs running around	
	91	Snake 8 LED Step	8 LEDs running around	
	92	Snake 8 LED Fade	8 LEDs running around	
	93	Snake 16 LED Step	16 LEDs running around	
	94	Snake 16 LED Fade	16 LEDs running around	
	95	Snake 32 LED Step	32 LEDs running around	
	96	Snake 32 LED Fade	32 LEDs running around	
	97	Snake Bounce 1 LED Step	1 LED bouncing around	
	98	Snake Bounce 1 LED Fade	1 LED bouncing around	
	99	Snake Bounce 2 LED Step	2 LEDs bouncing around	
	100	Snake Bounce 2 LED Fade	2 LEDs bouncing around	
	101	Snake Bounce 4 LED Step	4 LEDs bouncing around	
	102	Snake Bounce 4 LED Fade	4 LEDs bouncing around	
	103	Snake Bounce 8 LED Step	8 LEDs bouncing around	
	104	Snake Bounce 8 LED Fade	8 LEDs bouncing around	
	105	Snake Bounce 16 LED Step	16 LEDs bouncing around	
	106	Snake Bounce 16 LED Fade	16 LEDs bouncing around	
	107	Snake Bounce 32 LED Step	32 LEDs bouncing around	
	108	Snake Bounce 32 LED Fade	32 LEDs bouncing around	

Intensity Pixels	109	Half Sine	PixelMask 167 - Moving	RGB, P3 & Pixels set "normal output", while Color Wheel sets "background"
	110	Double Half Sine	PixelMask 171 - Moving	
	111	Quad Half Sine	PixelMask 175 - Moving	
	112	Sine	PixelMask 179 - Moving	
	113	Double Sine	PixelMask 183 - Moving	
	114	Quad Sine	PixelMask 187 - Moving	
	115	Exp	PixelMask 191 - Moving	
	116	Double Exp	PixelMask 195 - Moving	
	117	Quad Exp	PixelMask 199 - Moving	
	118	InExp	PixelMask 203 - Moving	
	119	Double InExp	PixelMask 207 - Moving	
	120	Quad InExp	PixelMask 211 - Moving	
	121	Ramp Up	PixelMask 215 - Moving	
	122	Double Ramp Up	PixelMask 219 - Moving	
	123	Quad Ramp Up	PixelMask 223 - Moving	
	124	Ramp Down	PixelMask 227 - Moving	
	125	Double Ramp Down	PixelMask 231 - Moving	
	126	Quad Ramp Down	PixelMask 235 - Moving	
	127	Sawtooth	PixelMask 239 - Moving	
	128	Double Sawtooth	PixelMask 243 - Moving	
	129	Quad Sawtooth	PixelMask 247 - Moving	
	130	Nightrider	Clasic Nightrider effect	
	131	Starfield	Regular	
	132	Starfield Heavy	Heavy	
	133	Snowflakes	Regular	
	134	Snowflakes Heavy	Heavy	
	135	Rain	Regular	
	136	Rain Heavy	Heavy	
	137	Waterdrop	Intensity wave from center to outside	
	138 … 143	No FX		

Overlays	144	Overlay SparkleStars	LEDs Sparkle Overlay (random twinkling of individual LEDs)	Effect in full white (or other color if set via Color Wheel), overlayed on "normal" output created by RGB, P3 & Pixels
	145	Overlay SparkleStars Heavy	Same as SparkleStars, but with more LEDs on at same time	
	146	Overlay Lightning Flashes Random	LEDs flashing at random like lightning	
	147	Overlay Lightning Flashes Random Heavy	More LEDs flashing at random like lightning	
	148	Overlay Lightning Flashes Linear	LEDs flashing like lightning linear effect	
	149	Overlay Lightning Flashes Linear Heavy	LEDs flashing like lightning linear effect	
	150	Overlay Fiber optic	Fiber optic effect	
	151	Overlay Noise	LEDs Noise Overlay	
	152	Overlay Random 5% Step	LED Random Chase Step with always 5% on	
	153	Overlay Random 5% Fade	LED Random Chase Fade with always 5% on	
	154	Overlay Random 10% Step	LED Random Chase Step with always 10% on	
	155	Overlay Random 10% Fade	LED Random Chase Fade with always 10% on	
	156	Overlay Random 20% Step	LED Random Chase Step with always 20% on	
	157	Overlay Random 20% Fade	LED Random Chase Fade with always 20% on	
	158	Overlay Random 40% Step	LED Random Chase Step with always 40% on	
	159	Overlay Random 40% Fade	LED Random Chase Fade with always 40% on	
	160	Overlay Random 80% Step	LED Random Chase Step with always 80% on	
	161	Overlay Random 80% Fade	LED Random Chase Fade with always 80% on	
	162	Overlay Nightrider	Overlay Nightrider (classic red pixel chase effect)	
	163	Overlay Starfield	Regular	
	164	Overlay Starfield Heavy	Heavy	
	165	Overlay Snowflakes	Regular	
	166	Overlay Snowflakes Heavy	Heavy	
	167	Overlay Rain	Regular	
	168	Overlay Rain Heavy	Heavy	
	169	Overlay Waterdrop	Intensity wave from center to outside	

	170 … 175	No FX		
Color Pixels	176	Rainbow LEDs Step	Rainbow across the LEDs (in pixel order)	RGB, Pixels, P3 & Color Wheel ignored
	177	Rainbow LEDs Fade	Rainbow across the LEDs (in pixel order)	
	178	Random Rainbow LEDs Step	Random rainbow across the LEDs	
	179	Random Rainbow LEDs Fade	Random rainbow across the LEDs	
	180	Red-Yellow LEDs Step	Red-Yellow variations across the LEDs (in pixel order)	
	181	Red-Yellow LEDs Fade	Red-Yellow variations across the LEDs (in pixel order)	
	182	Random Red-Yellow LEDs Step	Red-Yellow variations across the LEDs	
	183	Random Red-Yellow LEDs Fade	Red-Yellow variations across the LEDs	
	184	Yellow-Green LEDs Step	Yellow-Green variations across the LEDs (in pixel order)	
	185	Yellow-Green LEDs Fade	Yellow-Green variations across the LEDs (in pixel order)	
	186	Random Yellow-Green LEDs Step	Yellow-Green variations across the LEDs	
	187	Random Yellow-Green LEDs Fade	Yellow-Green variations across the LEDs	
	188	Green-Cyan LEDs Step	Green-Cyan variations across the LEDs (in pixel order)	
	189	Green-Cyan LEDs Fade	Green-Cyan variations across the LEDs (in pixel order)	
	190	Random Green-Cyan LEDs Step	Green-Cyan variations across the LEDs	
	191	Random Green-Cyan LEDs Fade	Green-Cyan variations across the LEDs	
	192	Cyan-Blue LEDs Step	Cyan-Blue variations across the LEDs (in pixel order)	
	193	Cyan-Blue LEDs Fade	Cyan-Blue variations across the LEDs (in pixel order)	
	194	Random Cyan-Blue LEDs Step	Cyan-Blue variations across the LEDs	
	195	Random Cyan-Blue LEDs Fade	Cyan-Blue variations across the LEDs	

Color Pixels	196	Blue-Magenta LEDs Step	Blue-Magenta variations across the LEDs (in pixel order)	RGB, Pixels, P3 & Color Wheel ignored
	197	Blue-Magenta LEDs Fade	Blue-Magenta variations across the LEDs (in pixel order)	
	198	Random Blue-Magenta LEDs Step	Blue-Magenta variations across the LEDs	
	199	Random Blue-Magenta LEDs Fade	Blue-Magenta variations across the LEDs	
	200	Magenta-Red LEDs Step	Magenta-Red variations across the LEDs (in pixel order)	
	201	Magenta-Red LEDs Fade	Magenta-Red variations across the LEDs (in pixel order)	
	202	Random Magenta-Red LEDs Step	Magenta-Red variations across the LEDs	
	203	Random Magenta-Red LEDs Fade	Magenta-Red variations across the LEDs	
	204	Red White Blue Step	Full	
	205	Red White Blue Fade	Full	
	206	Fire	Pixels	
	207	Water	Pixels	
	208	Swimming pool	Pixels	
	209	Ice	Pixels	
	210	Hot and cold	Pixels	
	211	Warm and fuzzy	Pixels	
	212	Silver and gold	Pixels	
	213	Gold and silver	Pixels	
	214	Electric arc	Pixels	
	215	Plasma	Pixels	
	216	Police Car 1		
	217	Police Car 2		
	218	Police Car 3		
	219	Welding	Welding flashes	
	220 … 225	No FX		

Color Modifier	226	Spectrum Shifter Static	Shift color of each individual LED	RGB, Pixels, P3 & Color Wheel set normal output - Effects shifts that output on a pixel-per-pixel basis
	227	Spectrum Shifter Step	As spectrum shifter static, but random stepping thru random levels of shift (FX speed sets max. shift - Speed fixed)	
	228	Spectrum Shifter Fade	As spectrum shifter static, but random fading thru random levels of shift (FX speed sets max. shift - Speed fixed)	
	229	Pixel Spectrum Shifter Static	LED 1: no color change / LED 32/100: maximum color change (as set by FX speed channel)	
	230	Pixel Spectrum Shifter Step	As pixel spectrum shifter static, but effect steps thru the pixels in order (FX speed sets max. shift - Speed fixed)	
	231	Pixel Spectrum Shifter Fade	As pixel spectrum shifter static, but effect fades thru the pixels in order (FX speed sets max. shift - Speed fixed)	
	232	Pixel Spectrum Shifter Random Static	As pixel spectrum shifter static, but random pixel order	
	233	Pixel Spectrum Shifter Random Step	As pixel spectrum shifter step, but random pixel order (FX speed sets max. shift - Speed fixed)	
	234	Pixel Spectrum Shifter Random Fade	As pixel spectrum shifter fade, but random pixel order (FX speed sets max. shift - Speed fixed)	
	235	Color Toggle Step	Step between color defined by RGB + P3 and Color Wheel	Color A defined by RGB + P3 // Color B defined by Color Wheel
	236	Color Toggle Fade	Fade between color defined by RGB + P3 and Color Wheel	
	237	Tungsten	RGB input to each LED (from DMX or P3) is translated to intensity only, and LED shows 2700 K white with tungsten dimming effect	RGB, Pixels, P3 & Color Wheel converted into an intensity of white
	238	Tungsten Delay	RGB input to each LED (from DMX or P3) is translated to intensity only, and LED shows 2700 K white with tungsten dimming effect including delay	

	239 … 243	No FX		
Timing	244	Video SloMo	Output of LEDs is average of last x frames (DMX or P3) - FX Speed sets amount of frames to average	Normal output, only affecting timing/average
	245 … 250	No FX		
	251	PixelMasks Static	Value of the FX Speed channel selects which combination of pixels is ON (see PixelMasks table)	RGB & Pixels set color for "ON pixels", while Color Wheel sets color for "OFF pixels"
	252 253	No FX		
	254	ColorLooks Static	Value of the FX Speed channel selects between 256 predefined looks (see ColorLooks table)	RGB, Pixels & Color Wheel Ignored
	255	No FX		

Specifications

For full product specifications, see the Exterior Dot-1/4/9 Pro area of the Martin website at www.martin.com.

FCC compliance

This equipment has been tested and found to comply with the limits for a Class A digital device, pursuant to part 15 of the FCC Rules. These limits are designed to provide reasonable protection against harmful interference when the equipment is operated in a commercial environment. This equipment generates, uses, and can radiate radio frequency energy and, if not installed and used in accordance with the instruction manual, may cause harmful interference to radio communications. Operation of this equipment in a residential area is likely to cause harmful interference in which case the user will be required to correct the interference at his own expense.

FCC supplier's declaration of conformity declaration

This device complies with part 15 of the FCC Rules. Operation is subject to the following two conditions:

1. This device may not cause harmful interference, and
2. this device must accept any interference received, including interference that may cause undesired operation.

Canadian Interference-Causing Equipment Regulations – Règlement sur le Matériel Brouilleur du Canada

This Class A digital apparatus meets all requirements of the Canadian Interference-Causing Equipment Regulations. Cet appareil numérique de la classe A respecte toutes les exigences du Règlement sur le Matériel Brouilleur du Canada.

CAN ICES-003 (A) / NMB-003 (A)

EU Declaration of Conformity

An EU Declaration of Conformity covering this product is available for download from the Exterior Dot-1/4/9 Pro area of the Martin website at www.martin.com.

Disposing of the product

Martin products are supplied in compliance with Directive 2012/19/EC of the European Parliament and of the Council of the European Union on WEEE (Waste Electrical and Electronic Equipment), where applicable.

Help preserve the environment! Ensure that this product is recycled at the end of its life. Your supplier can give details of local arrangements for the disposal of Martin products.

Exterior Dot-1/4/9 Pro

Safety and Installation Manual

Exterior Dot-1 Pro

Exterior Dot-4 Pro

Exterior Dot-9 Pro

Martin®

Dimensions

All dimensions are in millimeters

Exterior Dot-1 Pro string

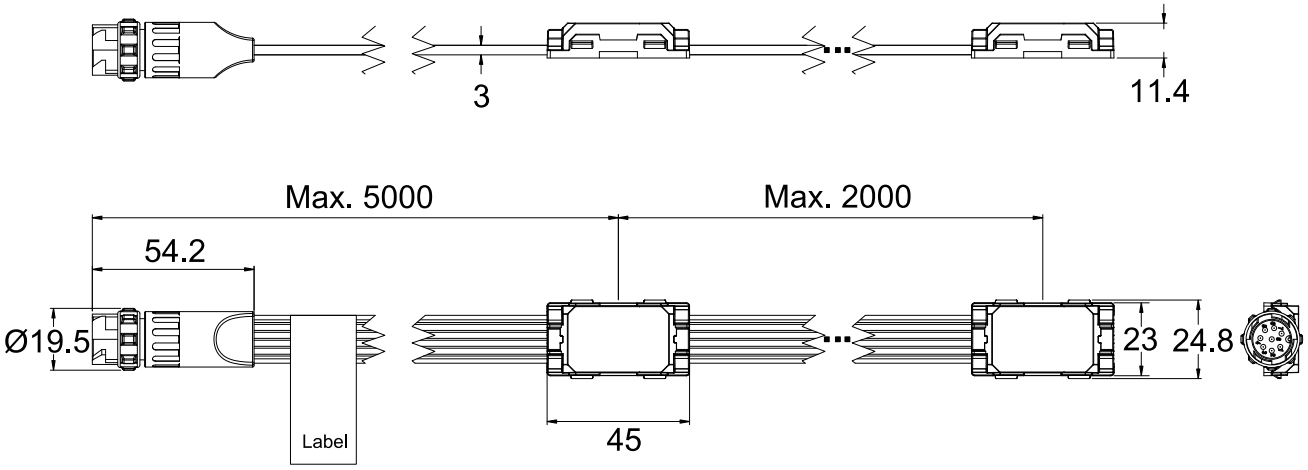

Exterior Dot-4 Pro string

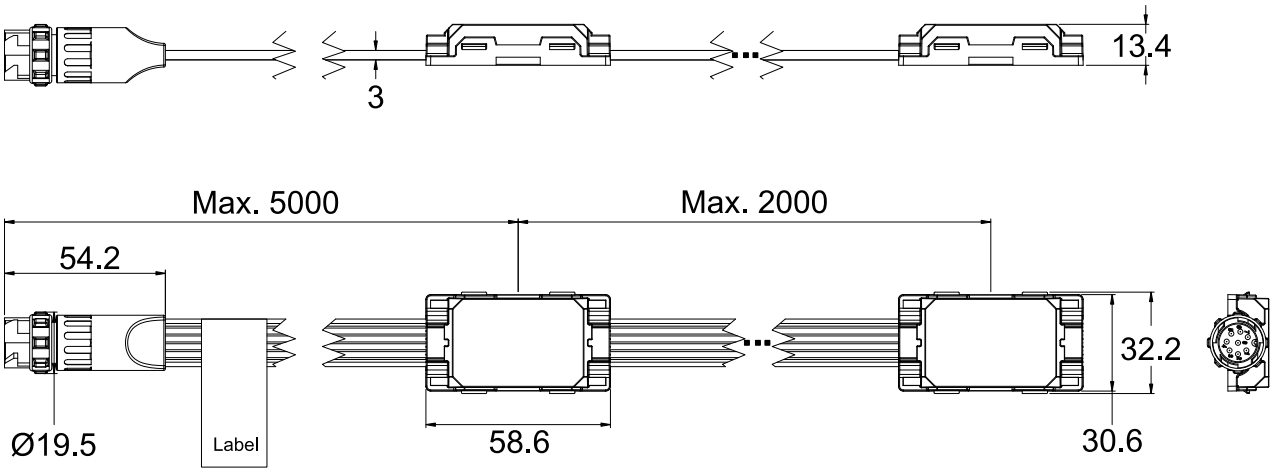

©2024-2025 HARMAN PROFESSIONAL DENMARK ApS. All rights reserved. Features, specifications and appearance are subject to change without notice. HARMAN PROFESSIONAL DENMARK ApS and all affiliated companies disclaim liability for any injury, damage, direct or indirect loss, consequential or economic loss or any other loss occasioned by the use of, inability to use or reliance on the information contained in this document. Martin is a registered trademark of HARMAN PROFESSIONAL DENMARK ApS registered in the United States and/or other countries.

HARMAN PROFESSIONAL DENMARK ApS, Olof Palmes Allé 44, 8200 Aarhus N, Denmark
HARMAN PROFESSIONAL, INC., 8500 Balboa Blvd., Northridge CA 91325, USA

www.martin.com

Exterior Dot-1/4/9 Pro Safety and Installation Manual English, Revision C

Exterior Dot-9 Pro string

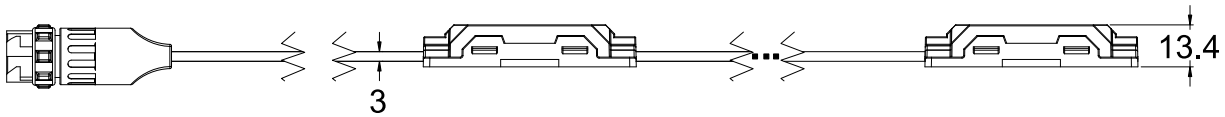

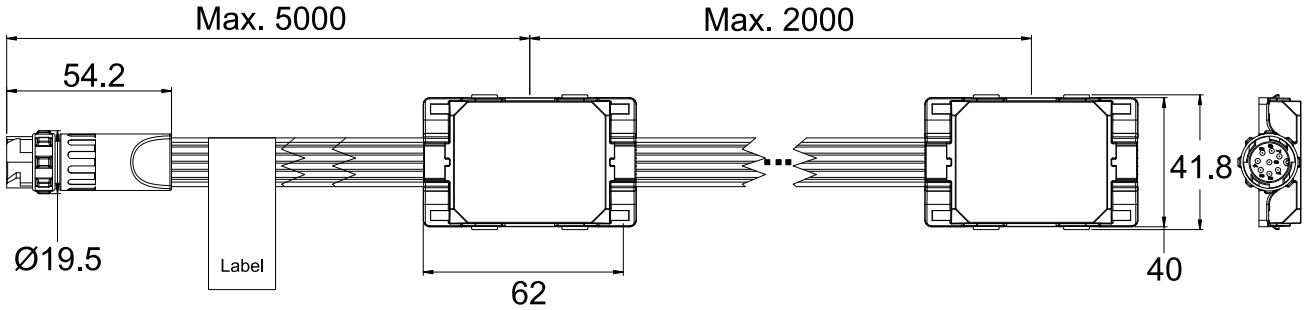

Exterior AC-Feeder

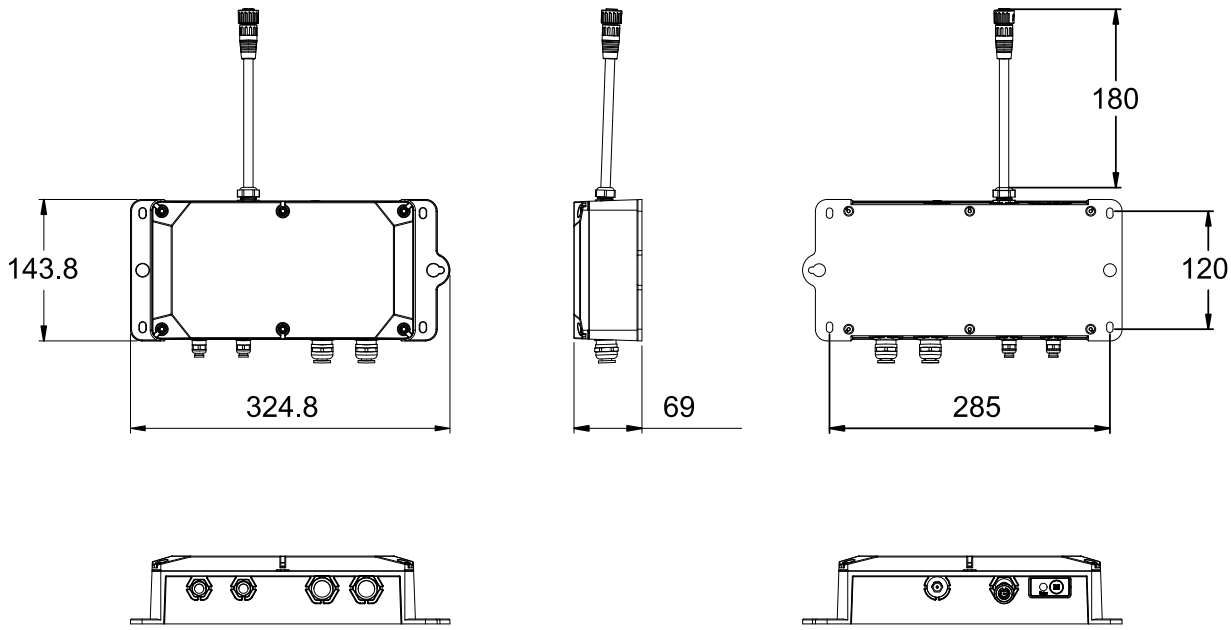

Exterior DC-Feeder

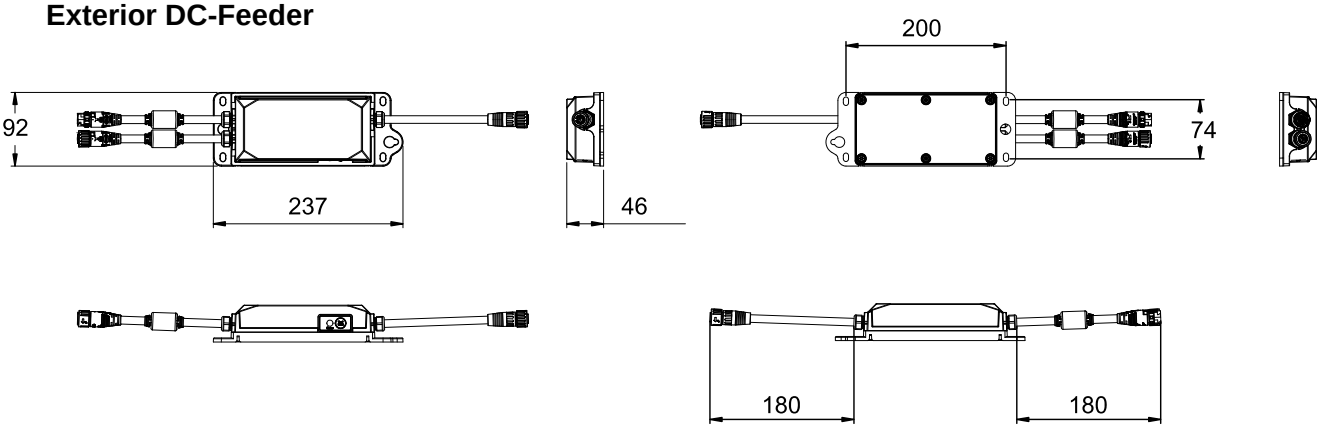

Exterior Dot-1 Mounting Bracket

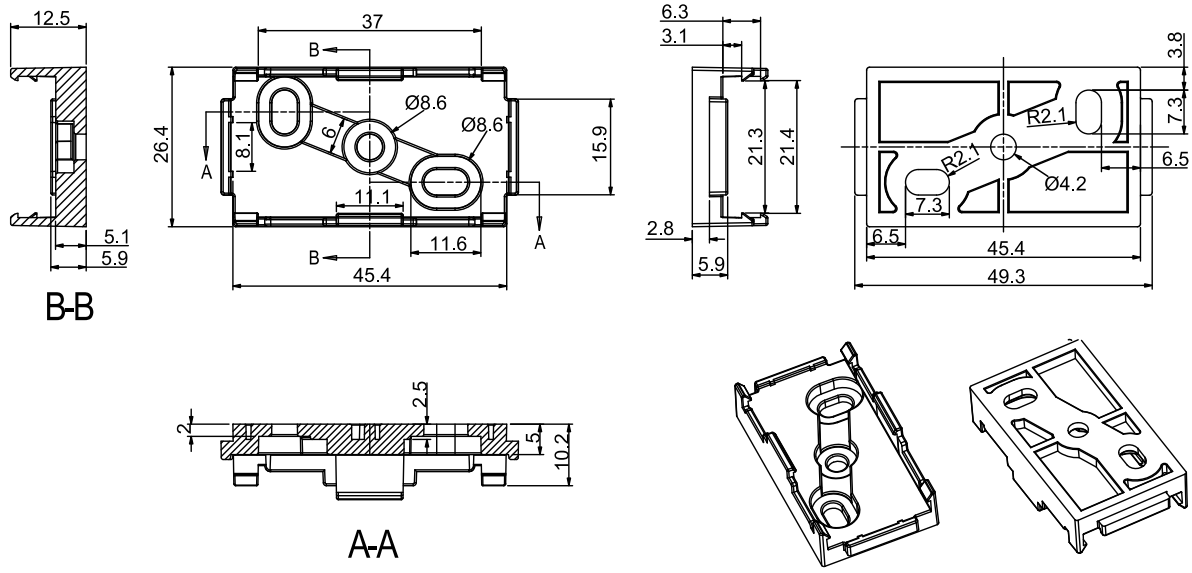

Exterior Dot-4 Mounting Bracket

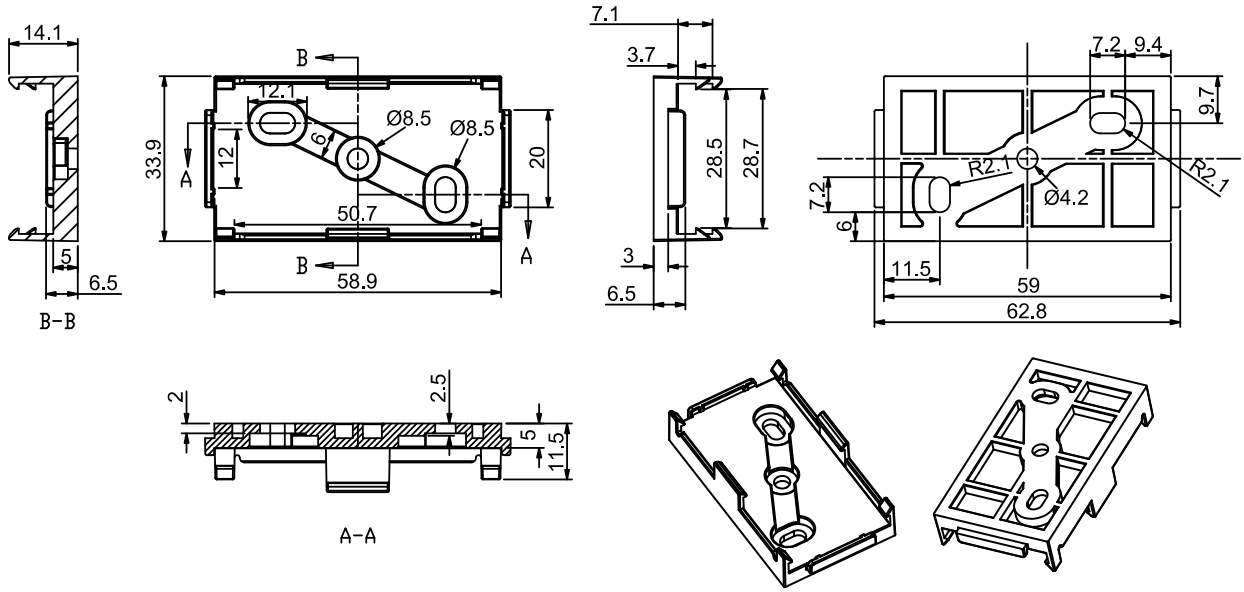

Exterior Dot-9 Pro Mounting Bracket

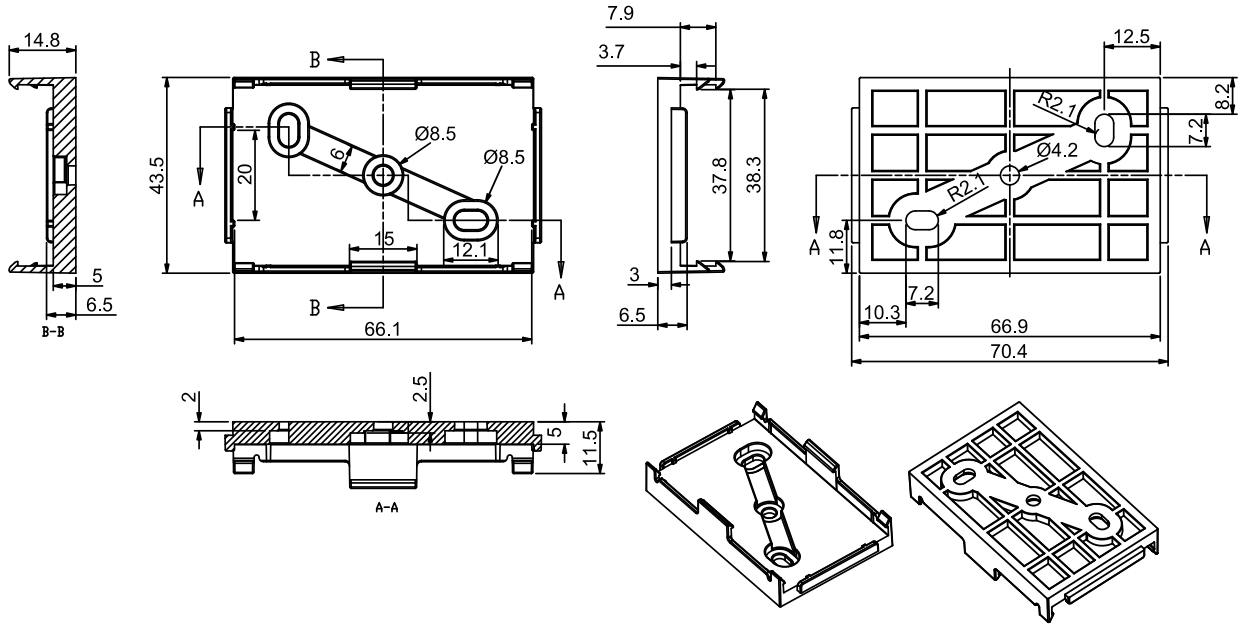

Exterior Dot-1 Pro Mounting Profile

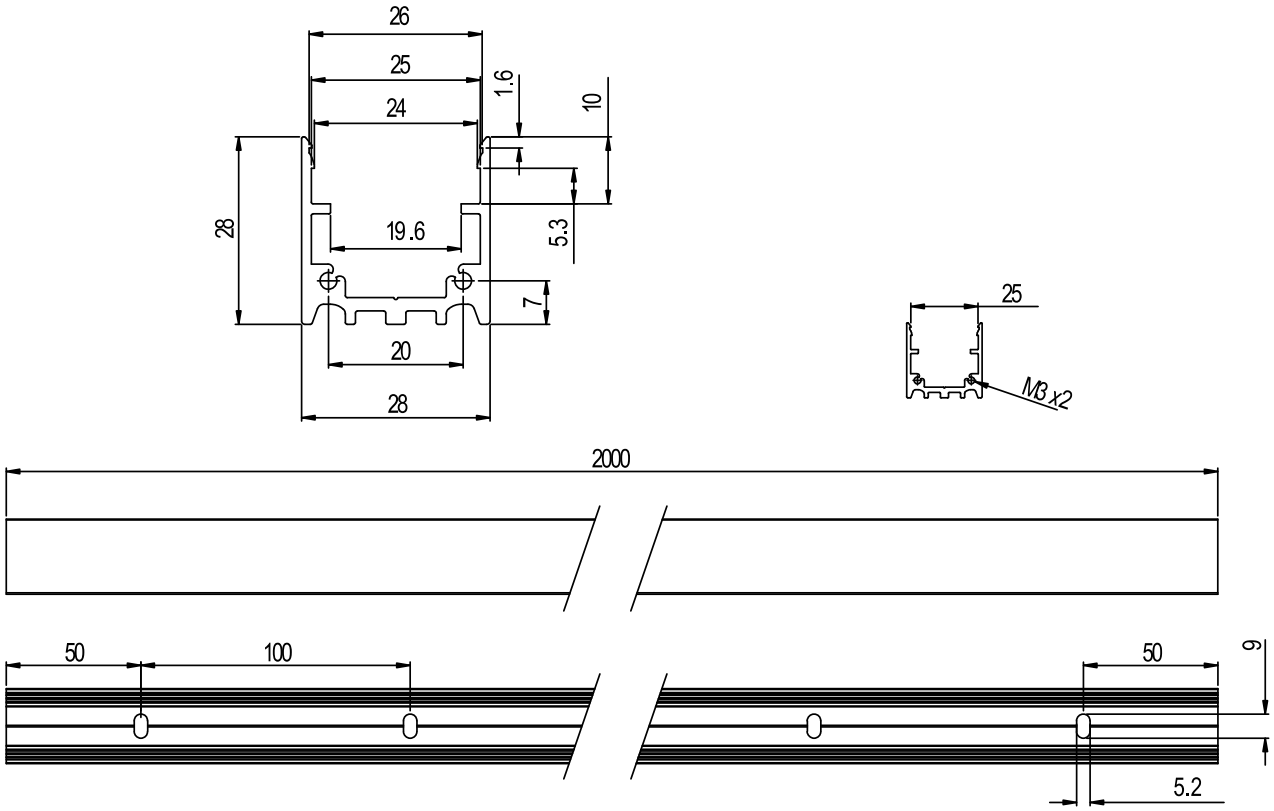

Exterior Dot-1 Pro Mounting Profile Cover

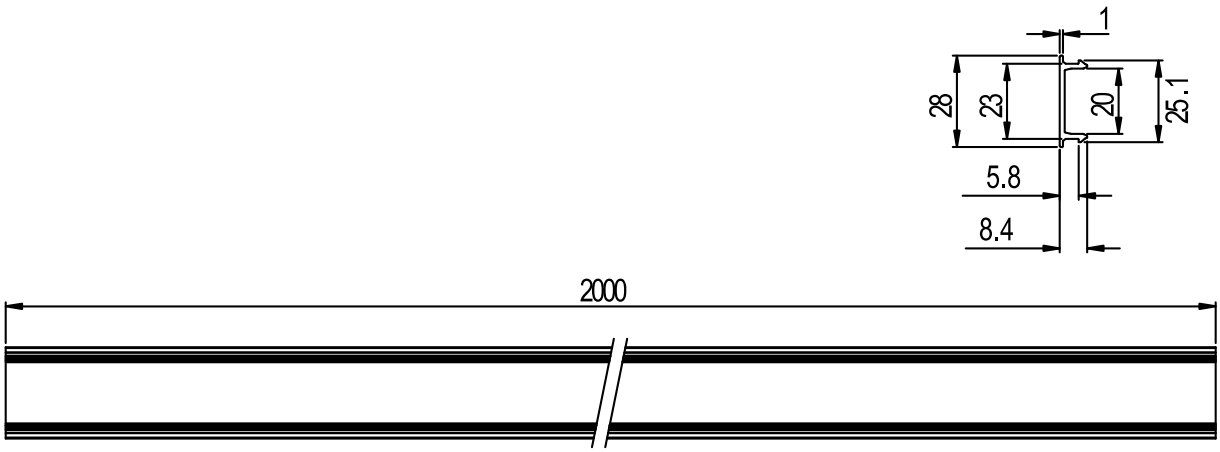

Exterior Dot-4 Pro Mounting Profile

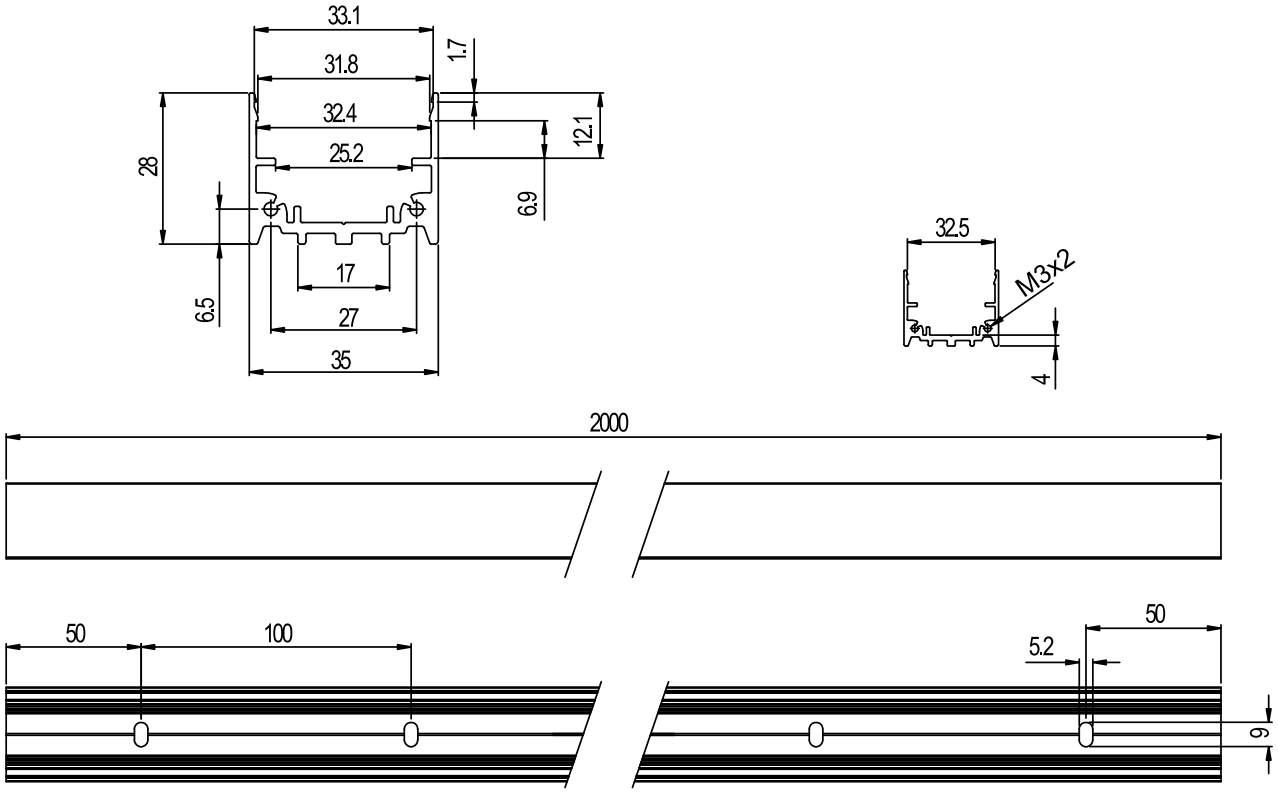

Exterior Dot-4 Pro Mounting Profile Cover

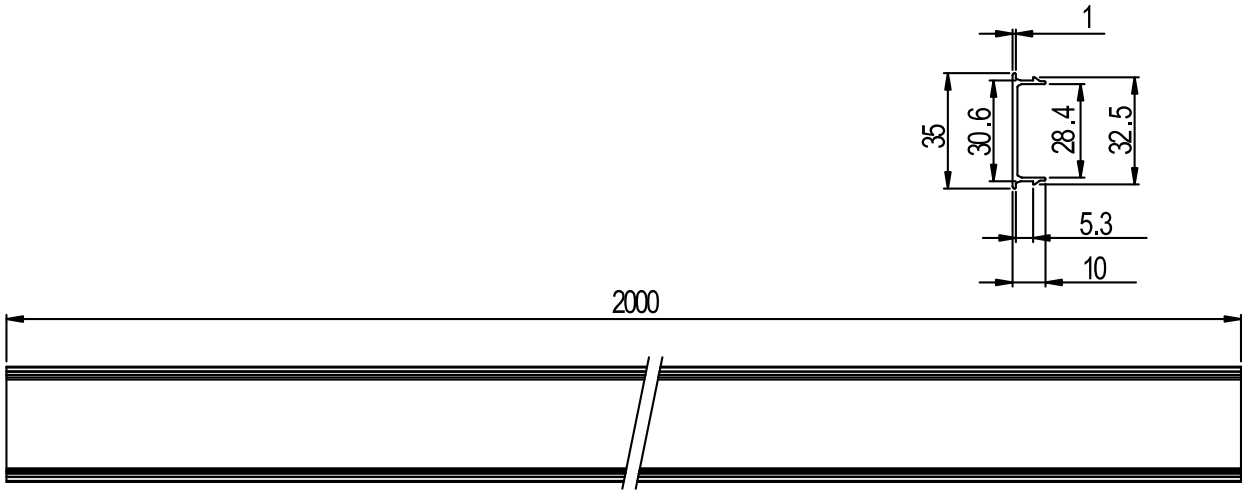

Exterior Dot-9 Pro Mounting Profile

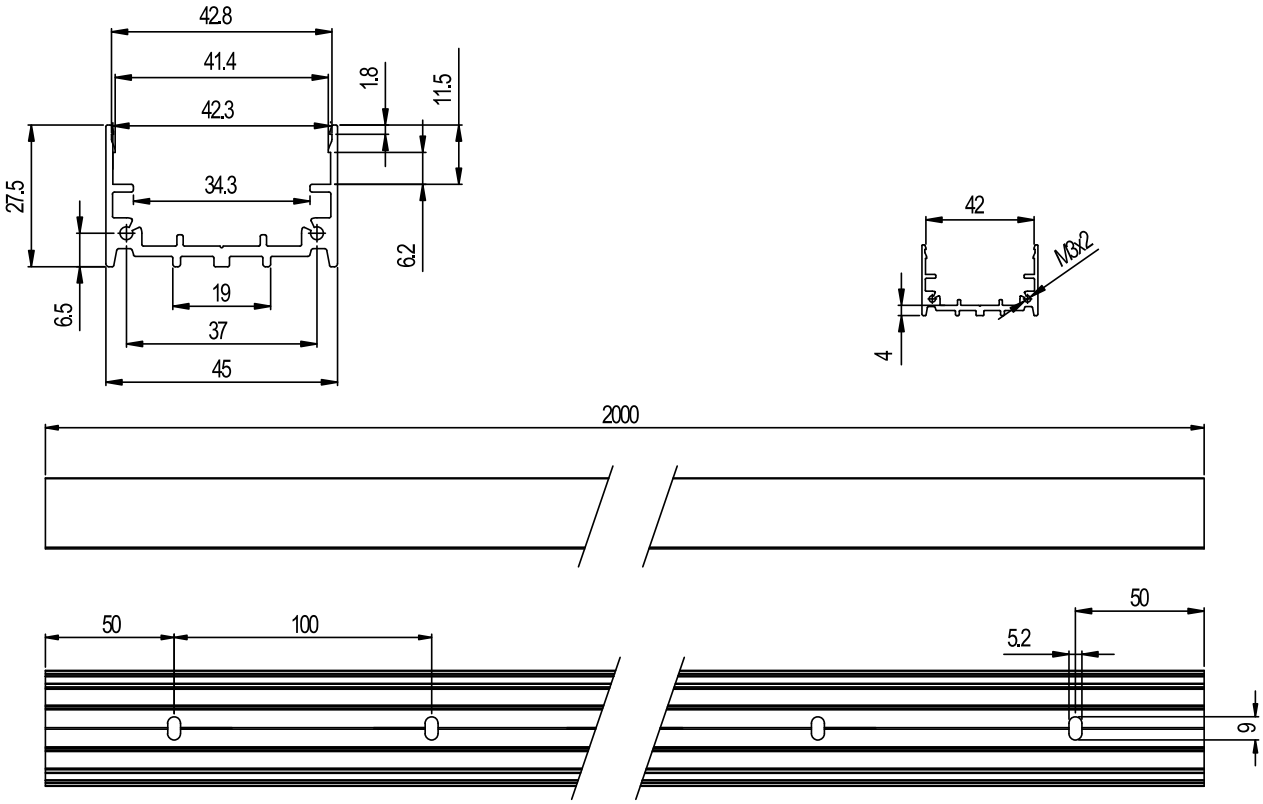

Exterior Dot-9 Pro Mounting Profile Cover

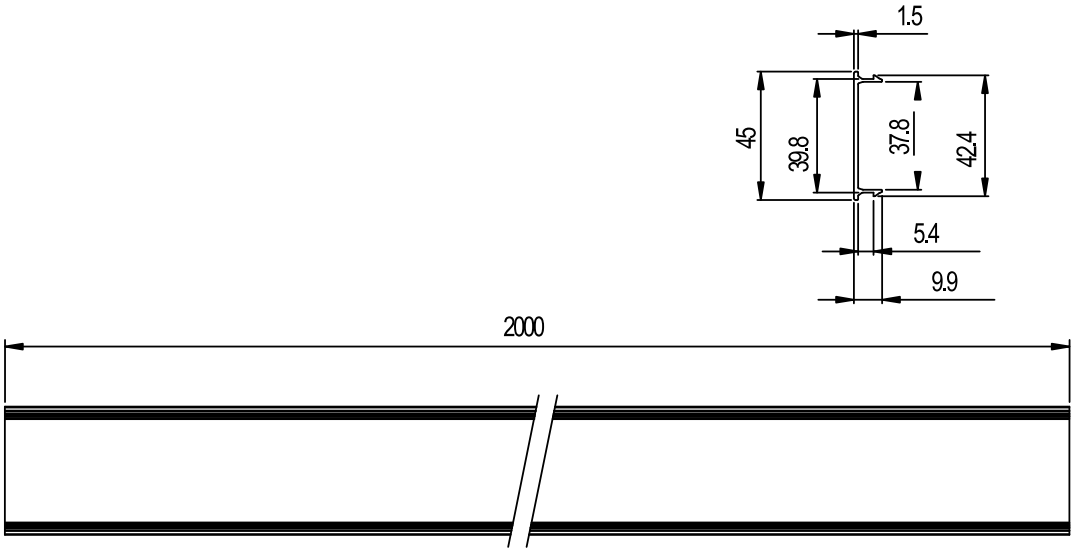

Table of contents

Dimensions 2
Safety information 10
Precautions to avoid damage 15
Cleaning 15
Operating temperature precautions 15
Sealing unused connectors with blanking caps 15
Maintaining IP67 protection 15
Protecting connections from moisture 15
Introduction 17
Optional accessories 17
Before using the product for the first time 17
Physical installation 18
Mounting directly on a surface or structure 18
Using optional mounting accessories 18
Optical accessories 20
Changing the length of a string 21
System installation 22
Maintenance 23
Cleaning 23

Safety information

WARNING!

Read the safety precautions in this manual before installing, operating or servicing this product.

The following symbols are used to identify important safety information on the product and in this manual:

Warning!	**Warning!**	**Warning!**	**Warning!**	**Warning!**	**Warning!**
Safety hazard. Risk of severe injury or death.	***Hazardous voltage. Risk of lethal or severe electric shock.***	***Fire hazard.***	***Burn hazard. Hot surface. Do not touch.***	***Intense light emission.***	***See user documentation.***

Warning! Read this Safety and Installation Manual before installing, powering or servicing the Exterior Dot-1/4/9 Pro. Follow the safety precautions given in this manual, in the Exterior Dot-1/4/9 Pro User Manual and in the manuals of all the devices you connect to the product. Observe all warnings given in manuals and printed on devices. Respect all locally applicable laws and regulations. Make sure that everyone who is involved in working on or using the product has read and understood these safety precautions and warnings.

This Safety and Installation Manual is supplied with the Exterior Dot-1/4/9 Pro and available for download together with the Exterior Dot-1/4/9 Pro User Manual from the Martin® website at www.martin.com. Check the Martin website and make sure that you have the latest revisions of the user documentation for all the devices in your installation. Martin user manual revisions are identified at the bottom of page 2.

Install, operate and service Martin products only as directed in their manuals, or you may create a safety hazard or cause damage that is not covered by product warranties. Keep this manual for future use.

The Exterior Dot-1/4/9 Pro is for professional use and must be installed by a qualified technician. It is not for household use.

The safety and suitability of lifting equipment, installation location, anchoring method, mounting hardware and electrical installation are the responsibility of the installer.

Users may carry out external cleaning and install the accessories available from Martin following the instructions and warnings given in this manual, but any service operation not described in this manual or in the Exterior Dot-1/4/9 Pro User Manual must be referred to an authorized Martin service agent. The light source contained in the Exterior Dot-1/4/9 Pro is non-replaceable.

The Exterior Dot-1/4/9 Pro is suitable for mounting at any height, including less than 1.2 m (3.9 ft.) and more than 5 m (16.4 ft.) above ground or floor level.

Do not operate the Exterior Dot-1/4/9 Pro at an altitude of more than 2000 m (6570 ft.) above sea level.

Technical Support

If you have any questions about how to install or operate the Exterior Dot-1/4/9 Pro safely, please contact Harman Professional Technical support.

For technical support in N. America, please contact:

HProTechSupportUSA@harman.com
Phone: (844) 776-4899

For technical support outside North America, please contact your national distributor.

Protection from electric shock

Read and respect the directions given in the user documentation of the Exterior Dot-1/4/9 Pro and of all the devices that you intend to connect to it, particularly the instructions, limits and warnings that apply to:

- system layout,
- connections to other devices,
- specified cables,
- maximum cable lengths, and
- maximum number of devices that can be connected.

Note in particular that, if you increase the pitch of an Exterior Dot-1/4/9 Pro string by inserting Martin Exterior Dot-1/4/9 Pro ribbon cable between Dots, you may have to remove Dots from the string in order to stay within safe limits.

Connect the Exterior Dot-1/4/9 Pro system only to the devices specified in the Exterior Dot-1/4/9 Pro user documentation and only as directed in that documentation.

Use only the cables specified in the Exterior Dot-1/4/9 Pro user documentation and on the Martin website at www.martin.com to interconnect devices in the installation. If the specified cables are not long enough for an intended cable run, consult Martin for assistance in finding or creating a safe alternative solution.

Provide a means of locking out AC mains power so that power to the installation can be shut down and made impossible to reapply, even accidentally, during work on the installation.

Shut down power to the installation at the main power distribution board and lock out power before carrying out any installation or maintenance work.

Shut down power to the installation when it is not in use.

Before using the Exterior Dot-1/4/9 Pro, check that all power distribution equipment and cables are in perfect condition, are rated for the current requirements of all connected devices, are protected to IP67 or higher and are of suitable type for the location (including water, pollution, temperature and UV resistance).

Isolate the installation from power immediately if any product, cable, connector, seal, cover or other component is damaged, defective, deformed or showing signs of overheating. Do not reapply power until repairs have been completed.

The Exterior Dot-1/4/9 Pro is IP67-rated. It is suitable for temporary or permanent indoor and outdoor use, but do not immerse it in water or install it in a location where it may become submerged. Ensure sufficient drainage to cope with the heaviest rainfall. Make sure that water can drain away from the installation area at least as fast as it can enter it.

Arrange cables so that they arrive at connectors from below. Create a ‘drip loop’ if necessary. With this arrangement, gravity will cause any condensation or water droplets to run away from connectors.

Install a termination cap on the ribbon cable at the end of each string of Dots.

Support the weight of cable runs. Do not allow a length of cable to hang from a Dot or connector.

The Exterior Dot-1/4/9 Pro must be connected to power only as described in this manual. It accepts 15 VDC power from either:

1. a Martin Exterior AC-Feeder that is connected to AC mains power at 100-277 V, or
2. a Martin Exterior DC-Feeder that is connected to 48 VDC power supplied by one of the following devices:
   - Martin P3 PowerPort 2000,
   - Martin P3 PowerPort 500,
   - Martin DCE PSU 240 IP, or
   - suitable generic 48-volt PSU.

When creating an Exterior Dot-1/4/9 Pro installation, respect carefully the safety limits and instructions in the user documentation of the above products.

Power characteristics

Exterior Dot-1/4/9 Pro devices have the following power characteristics:

- DC voltage: 15 VDC +/- 4%
- Typical total power consumption (at full intensity, full white):
  - Exterior Dot-1 Pro = 0.95 W per Dot
  - Exterior Dot-4 Pro = 1.50 W per Dot
  - Exterior Dot-9 Pro = 2.85 W per Dot
- Surge protection: 4 kV

Half-power mode

A half-power mode setting is available in Martin P3 PowerPort 500 IP, P3 PowerPort 2000 and Exterior AC-Feeder devices as well as in Martin P3 System Controllers and via RDM. If you apply the half-power mode setting, the typical total power consumption of the connected Exterior Dot-1/4/9 Pro Dots at full intensity, full white is as follows:

- Exterior Dot-1 Pro = 0.50 W per Dot
- Exterior Dot-4 Pro = 0.75 W per Dot
- Exterior Dot-9 Pro = 1.45 W per Dot

Custom Dot strings

The Exterior Dot-1/4/9 Pro can be ordered in custom configurations with the following variables:

- Length of lead-in cable
- Number of Dots per string
- Dot pitch (distance between Dots)

The following illustrations show the standard configurations plus the minimum and maximum limits of custom configurations.

Exterior Dot-1 Pro

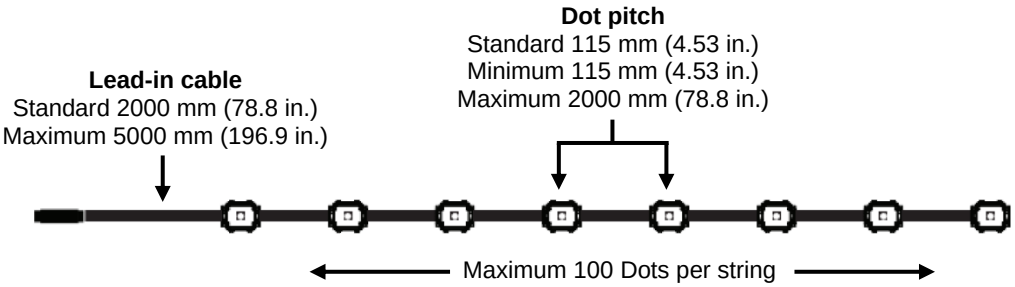

Exterior Dot-4 Pro

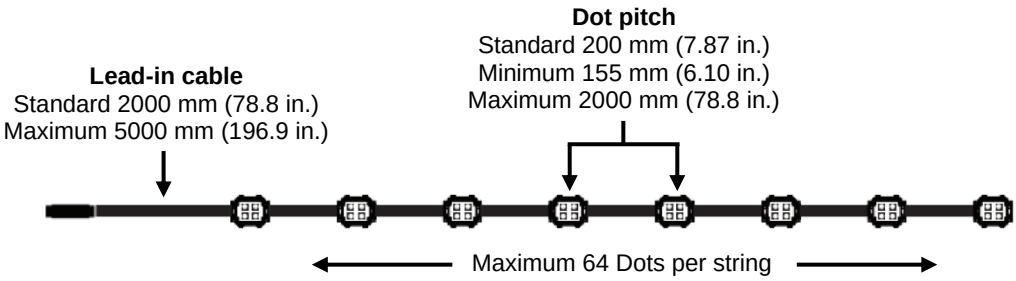

Exterior Dot-9 Pro

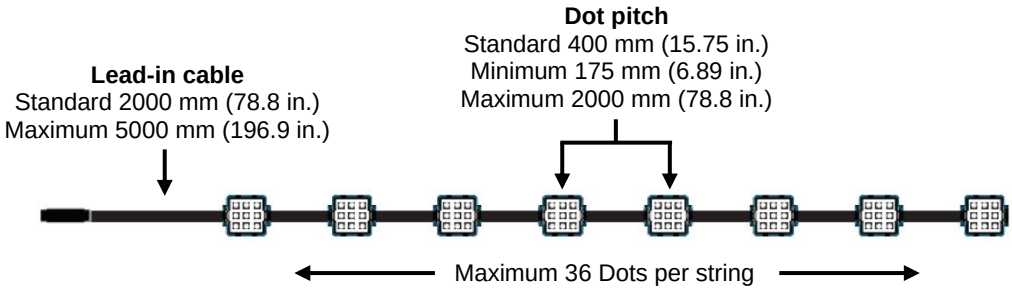

The maximum permitted length of a lead-in cable (cable between the AC-Feeder or DC-Feeder and the first Dot) is 5000 mm (196.9 in.). You can extend this an additional 5000 mm using an active lead-in extension cable available from Martin (see details in the Exterior Dot-1/4/9 Pro area of the Martin website at www.martin.com).

The maximum permitted length of cable between two Dots is 2000 mm (78.8 in.). If you need to position two Dots with a distance greater than 2000 mm between them, do not connect them on one power + data ribbon cable. Instead, install the two devices on two separate ribbon cables. Each cable must draw DC power from its own separate 15 VDC power outlet.

The maximum permitted total length of a chain of Exterior Dot-1/4/9 Pro devices is as follows:

- Exterior Dot-1 Pro = 132 m (433 ft.)
- Exterior Dot-4 Pro = 90 m (295 ft.)
- Exterior Dot-9 Pro = 48 m (157 ft.)

When you calculate the total length of the chain, you must include:

- the total length of the cables between the Dots, plus
- the length of the lead-in cable, plus
- the length of all cable extensions added between Dots.

See the system layout diagrams that are available in the Exterior Dot-1/4/9 Pro area of the Martin website at www.martin.com and respect the limits given in those diagrams.

Protection from eye injury

Do not stare directly into an Exterior Dot-1/4/9 Pro device's light output.

Do not look at the light output with magnifiers, telescopes, binoculars or similar optical instruments that may concentrate the light output.

Ensure that nobody is looking directly into the front of a device when it lights up suddenly. This can happen when power is applied or when the device receives a control signal.

Provide well-lit conditions to reduce the pupil diameter of anyone working on or near the device.

Wear protective glasses when working on or near the device.

Protection from injury

Fasten the Exterior Dot-1/4/9 Pro securely to a fixed surface or structure when in use. The device is not portable when installed.

To reduce the risk of strangulation, all flexible wiring connected to the device shall be effectively fixed to the installation surface or structure if the wiring is within arm's reach.

The weight of an Exterior Dot-1/4/9 Pro string not including mounting brackets or mounting profile is as follows:

- Exterior Dot-1 Pro string (100 Dots) = 2.48 kg (5.47 lb.)
- Exterior Dot-4 Pro string (64 Dots) = 2.96 kg (6.50 lb.)
- Exterior Dot-9 Pro string (36 Dots) = 2.75 kg (6.10 lb.)

The weight of an Exterior Dot-1/4/9 Pro string including one mounting bracket per Dot is as follows:

- Exterior Dot-1 Pro string (100 Dots) incl. brackets = 3.08 kg (6.79 lb.)
- Exterior Dot-4 Pro string (64 Dots) incl. brackets = 3.54 kg (7.80 lb.)
- Exterior Dot-9 Pro string (36 Dots) incl. brackets = 3.29 kg (7.25 lb.)

The weight of a standard 2-meter length of Exterior Dot-1/4/9 Pro mounting profile including cover but not including Dots is as follows:

- Exterior Dot-1 Pro mounting profile with cover, 2 m = 1.33 kg (2.93 lb.)
- Exterior Dot-4 Pro mounting profile with cover, 2 m = 1.49 kg (3.28 lb.)
- Exterior Dot-9 Pro mounting profile with cover, 2 m = 1.74 kg (3.84 lb.)

Ensure that any supporting structure and/or hardware used can hold at least six (6) times (or more if required by local regulations) the weight of all the devices they support.

The safety and suitability of lifting equipment, installation location, anchoring method, mounting hardware and electrical installation are the responsibility of the installer.

All fasteners used to mount Exterior Dot-1/4/9 Pro devices must be suitable for the application, corrosion resistant to suit the environment and strong enough to safely carry all supported items (Exterior Dots, cable, mounting hardware etc.).

Block access below the work area and work from a stable platform whenever installing, setting, adjusting, or cleaning the device.

After installation or service, check that all devices, accessories and rigging hardware items used are securely fastened in place.

Precautions to avoid damage

Important! To get the best out of the Exterior Dot-1/4/9 Pro and avoid causing damage that is not covered by the product warranty, make sure that everyone who is involved in installing, working on or using the Exterior Dot-1/4/9 Pro has read and understood the following information.

Cleaning

Excessive dirt buildup causes overheating and may lead to damage that is not covered by the product warranty. Clean the product at regular intervals (see “Cleaning” on page 32).

Operating temperature precautions

- Do not operate the Exterior Dot-1/4/9 Pro in an ambient temperature lower than -30° C (-22° F) or higher than 55° C (131° F).
- Exterior AC-Feeders and Exterior DC-Feeders have an internal thermal sensor. If the sensor detects excessive temperature, the Feeder will gradually regulate the output to the Dots and eventually shut down output completely. The Feeder and connected Dots will function normally again when the temperature has fallen to a safe level.
- When using a Martin P3 System Controller you can enable "thermal throttling" functionality. This feature allows output control of the entire installation so that all Dots will have the same brightness when running at reduced output.

Sealing unused connectors with blanking caps

Blanking caps for male and female hybrid DCE connectors can be ordered separately from Martin. Install blanking caps on all unused DCE connectors to seal them against water and dirt, otherwise short-circuits and damage may occur.

Maintaining IP67 protection

The Exterior Dot-1/4/9 Pro is supplied as a sealed unit. Do not try to disassemble the product in any other way, or you will affect the product’s IP67-rated weatherproofing. This may cause the product to malfunction and lead to damage that is not covered by the product warranty.

Protecting connections from moisture

Moisture can cause corrosion in unprotected cable connections. Moisture can also be sucked along the inside of cables at breaks or cuts in the cable jacket (for example at connection points) and into devices because of the vacuum effect of temperature fluctuations inside devices. To protect connections and devices from moisture, take at least one of the following precautions:

- Locate cable junctions in dry areas (e.g. in junction boxes in dry locations).
- Use connectors or junction boxes that are protected to IP67 or higher.
- Fill junction boxes with potting compound to seal the ends of cables and to protect connections from corrosion.

Keeping connections dry

Moisture on connectors can cause short circuits and damage to products. Check that all connectors are perfectly dry before you connect them.

Do not install the Exterior Dot-1/4/9 Pro during wet weather conditions or if condensation is visible on any surfaces.

Avoiding shocks and stress

Do not expose the Exterior Dot-1/4/9 Pro to physical shocks (by dropping onto a hard surface, for example).

Do not apply pressure to or otherwise stress diffusers or lenses.

Do not stress cables (by bending them sharply, for example). Protect cables from sharp edges. Note that sub-zero temperatures cause stress in cable materials.

Protecting from galvanic corrosion

Exterior AC-Feeder and Exterior DC-Feeder devices are corrosion-protected to C5 according to EN ISO 12944-2, but take precautions to avoid direct contact between aluminum and other metals because this can cause galvanic corrosion:

- Use an electrically insulating material (such as rubber or plastic) or a protective coating between aluminum mounting profiles and any other metal.
- Use a non-conductive coating such as Delta Seal on fasteners (screws, bolts, washers, etc.) where they come into contact with Dots or mounting profiles.

Introduction

Thank you for selecting an Exterior Dot-1/4/9 Pro lighting device from Martin®. This Safety and Installation Manual is supplied with each string of Dots. It gives details of installing and servicing the device as well as connecting to power. The Exterior Dot-1/4/9 Pro User Manual, containing detailed system diagrams and full instructions for setting up, controlling and monitoring devices, is available for download from the Exterior Dot-1/4/9 Pro area of the Martin website at www.martin.com. If you have any difficulty locating this document, please contact your Martin supplier for assistance.

Before installing, operating or servicing an Exterior Dot-1/4/9 Pro device, please check the Exterior Dot-1/4/9 Pro area of the Martin website at www.martin.com and make sure that you have the latest user documentation for the device.

Not all product specifications are included in the device's user documentation. You can find full specifications for the device in the Exterior Dot-1/4/9 Pro area of the Martin website. The online specifications include information to help you order accessories such as cables, Feeders, P3 PowerPorts, external PSUs etc.

Optional accessories

The following are available from Martin as optional accessories in versions to suit Exterior Dot-1 Pro, Exterior Dot-4 Pro and Exterior Dot-9 Pro devices:

- Diffuser dome
- Anti-glare shield
- Mounting bracket for surface-mounting
- 2000 mm (78.75 in.) lengths of aluminum mounting profile with clip-in system for surface-mounting Exterior Dot-1/4/9 Pro devices in perfectly aligned rows
- Wide range of cables, connectors and termination caps.

See the Exterior Dot-1/4/9 Pro area of the Martin website at www.martin.com for details and ordering information.

Before using the product for the first time

1. Read 'Safety information' at the beginning of this manual before installing, operating or servicing the Exterior Dot-1/4/9 Pro.
2. Unpack the device. Please make sure to recycle packaging material.
3. Ensure that there is no transportation damage before using devices. Do not attempt to operate a damaged device.
4. Check the Exterior Dot-1/4/9 Pro area of the Martin Professional website at www.martin.com for the most recent user documentation and technical information about the device. Martin manual revisions are identified by the revision letter at the bottom of the inside cover.

Physical installation

Warning! Read ‘Safety information’ on page 10 and ‘Precautions to avoid damage’ on page 15 before installing the Exterior Dot-1/4/9 Pro.

Contact your Martin supplier for assistance if you have any questions about how to install this product safely.

Exterior Dot-1/4/9 Pro devices are intended for temporary or permanent indoor and outdoor use. With an IP67 rating, they are protected against dust, humidity and water and are able to withstand powerful water jets, but they are not submersible. Do not submerge the device and do not install it in a location where water can build up around the device or under the base of the device. If necessary, provide drainage at the installation location.

Avoid stress on cables and tension at cable entries or connectors by supporting all cable runs with plenty of cable ties or similar supports that are suitable for the location, application and environment.

The Exterior Dot-1/4/9 Pro can be installed in any orientation.

Allow free airflow around Dots and allow at least 10 mm (0.4 in.) of clearance around the front surface.

Fasteners

All fasteners must be suitable for the application and environment. Steel fasteners must be grade 8.8 minimum according to ISO 898-1. Stainless steel fasteners must be grade 304 (A2) or better – and in marine environments stainless steel fasteners must be grade 316 (A4) or better – according to ISO 3506.

Use washers under the heads of all fasteners.

To minimize the risk of galvanic corrosion, apply a non-conductive coating such as Delta Seal to steel items that will come into contact with aluminum parts.

Mounting directly on a surface or structure

In temporary installations only, it is possible to mount Dots directly on a surface or structure by fastening them in place with cable ties that are anchored to the surface or structure. When installing Exterior Dot-4 Pro and Exterior Dot-9 Pro Dots, pass cable ties through the built-in slots provided in Dots. When installing Exterior Dot-1 Pro Dots, loop the cable tie around the ribbon cable.

Use enough cable ties to support Dots and cable runs without applying stress to Dots or cables. Do not try to create a sharp bend in a ribbon cable. Make sure that Dots and cables are protected from sharp edges and other potential sources of damage.

Using optional mounting accessories

For permanent installations, it is necessary to use either the mounting brackets or the mounting profile available from Martin for the Exterior Dot-1/4/9 Pro.

Dot

Dot in mounting bracket

Dots in mounting profiles

Exterior Dot-4 Pro accessories illustrated

Installing using a mounting bracket

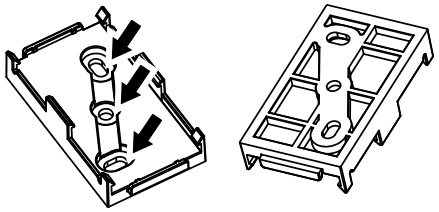

Mounting brackets are available for the Exterior Dot-1/4/9 Pro. Each bracket lets you install one Dot. In temporary installations only, it is possible to pass a cable tie over the mounting bracket using the track provided in the bracket and fasten Dots and brackets in place with cable ties. In permanent installations and for a more robust installation, follow the instructions below.

To install a Dot using a mounting bracket:

1. See drawing above right. Fasten the mounting bracket securely to the mounting surface using two or more suitable fasteners passed through the holes (arrowed) in the bracket. Make sure that screw heads do not protrude up from the bracket where they could damage the Dot or ribbon cable.
2. Hold the Dot so that it is centered over the bracket, then push the Dot into the clips in the bracket. Check that it is held securely by the clips on both sides of the bracket.

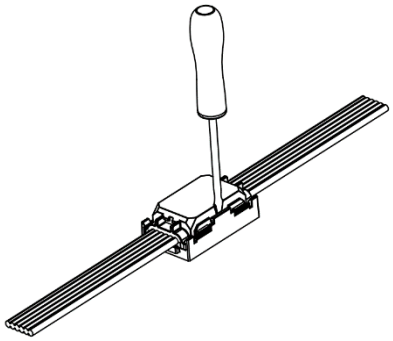

If you need to release a Dot from a bracket, see drawing on right. Push the clip on one side carefully with a flat-headed screwdriver until the clip releases the Dot on that side.

Installing using mounting profile

Aluminum mounting profile in versions dimensioned to match the Exterior Dot-1, Dot-4 or Dot-9 Pro is available from Martin in 2000 mm (78.75 in.) lengths. The profile lets you create straight lines of Dots. The profile is suitable for mounting on flat surfaces only.

You can cut profile to custom lengths with a hacksaw or angle grinder if necessary. After cutting, remove burrs and sharp edges (with a metal file, for example). We also recommend that you spray all cut ends with a clear sealant.

5.9 mm (0.23 in.) diameter holes are provided at 100 mm (3.94 in.) intervals in the base of the profile for M4 or M5 fasteners that will let you mount the profile on the mounting surface. You can drill additional holes if required.

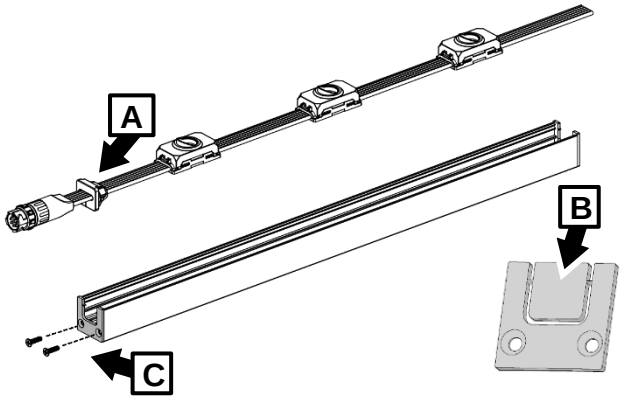

The aluminum covers in 2000 mm lengths that are supplied with the profile clip into the profile to provide a clean, flush finish. The covers are designed to be cut to suitable lengths depending on Dot pitch. Remove burrs and sharp edges after cutting. We also recommend that you spray all cut ends with a clear sealant. Two ribbon cables can be concealed in the profile behind the covers.

To install a string of Dots using mounting profile:

1. Cut the mounting profile to custom lengths, remove sharp edges, and drill extra holes in the profile for mounting fasteners if required.
2. Fastening the mounting profile to a flat surface using suitable fasteners, one fastener every 400 mm (1.4 ft.) minimum. Use washers under the heads of fasteners.
3. Place the string of Dots into the mounting profile and adjust into the correct position.
4. See drawings on right. Push a rubber seal **A** onto the ribbon cable of the string of Dots.
5. Remove the snap-out section **B** from an end cap, then slide the groove in the seal **A** over the lips in the end cap so that the seal holds the ribbon cable in the cap.
6. Use the two supplied screws **C** to fasten the end cap onto the end of the mounting profile as shown at **D.**

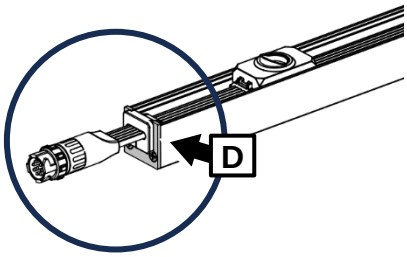

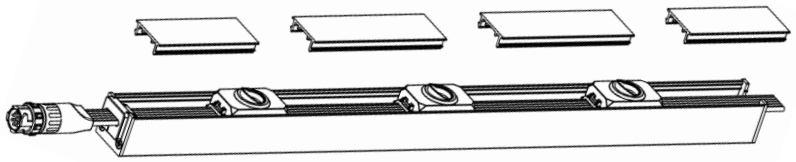

7. See drawing above. Cut suitable lengths of mounting profile cover to fill the gaps between Dots. Remove burrs and sharp edges, then clip the lengths of cover into the mounting profile.
8. See drawing below. If you need to remove lengths of mounting profile cover, lever them carefully out of the mounting profile with a flat-headed screwdriver. Do not apply any pressure to Dots while levering covers out of the profile.

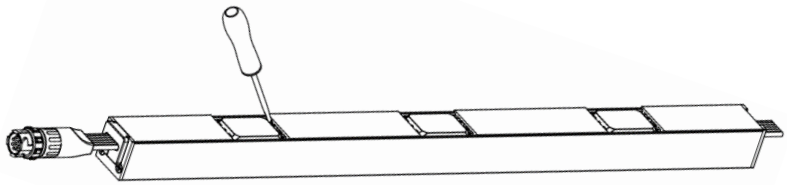

Install a termination cap on the end of the ribbon cable at the end of each string of Dots. Then, for a clean appearance, fasten an end cap onto the end of the mounting profile with the two supplied screws.

Optical accessories

Dot

Mounting bracket

Diffuser dome

Glare shield

Exterior Dot 4 accessories illustrated

Installing a diffuser dome

Optional diffuser domes that soften and spread the light output are available from Martin for the Exterior Dot-1/4/9 Pro. The diffuser domes are designed to be used in conjunction with Exterior Dot-1/4/9 Pro mounting brackets. The diffuser dome simply clips onto the bracket.

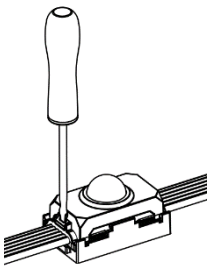

If you need to remove a diffuser dome from a Dot, release it from the clips in the diffuser dome holder with a flat-headed screwdriver as shown on right.

Installing a glare shield

Optional glare shields that restrict the light output in one direction are available from Martin for the Exterior Dot-1/4/9 Pro. The glare shields are designed to be used in conjunction with Exterior Dot-1/4/9 Pro mounting brackets and simply clip onto the brackets.

See drawing on right. The shades in glare shields can be rotated in 45° steps to match the direction in which they should reduce glare.

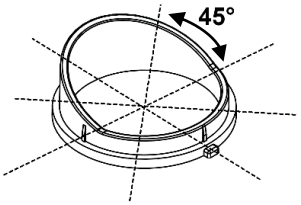

If you need to remove a glare shield, release it from its clips in the glare shield holder with a flat-headed screwdriver as shown for the diffuser dome in the last section.

Changing the length of a string

It is possible to shorten and splice Exterior Dot-1/4/9 Pro strings using end caps and splice connectors available from Martin. If you change the length of a string, do not exceed the maximum permitted lengths given under ‘Safety information’ on page 10.

Shortening a string

To shorten a string of Dots:

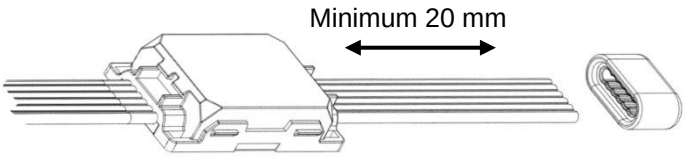

1. Check that the string is not connected to power.
2. Obtain a suitable end cap from Martin.
3. See drawing on right. Allowing at least 20 mm of ribbon cable for the end cap, make a clean, square cut in the ribbon cable and remove the unrequired Dots.
4. Fill the Exterior Dot-1/4/9 End Cap with exterior-quality glue (silicone recommended) and press it onto the end of the ribbon cable.
5. Allow the glue to set.

Joining two strings

To join two strings of Dots:

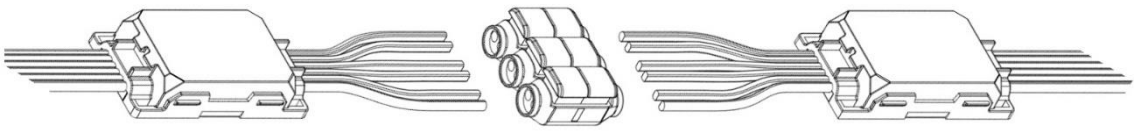

1. Check that the strings are not connected to power.
2. Obtain a suitable splice connector from Martin.
3. See drawing above. Allowing enough free ribbon cable to make connections, make clean, square cuts in the ribbon cables that you want to join together.
4. Separate the ribbon cable into three pairs of wires as shown in the drawing. Do not strip insulation from the wires.
5. Open the levers on the splice connector and fill the connector with exterior-quality glue (silicone recommended).
6. Insert the ends of the wires into the splice connector and close the connector levers to grip the wires and make the connections.
7. Allow the glue to set.

System installation

Warning! Read ‘Safety information’ on page 10 and ‘Precautions to avoid damage’ on page 15 before connecting Exterior Dot-1/4/9 Pro devices to DC power and data.

Warning! Connect the Exterior Dot-1/4/9 Pro only to the devices and using only the Martin cables specified in this manual and in the Exterior Dot-1/4/9 Pro User Manual that is available for download from the Martin website at www.martin.com.

Warning! Do not exceed the maximum numbers of devices that can be connected in chains and maximum cable lengths specified in ‘Safety information’ on page 10 and in the manuals of the other devices in the system.

Important! If using DMX, make sure that the DMX console and DC power source are at the same earth (ground) potential, or the data signal may become saturated.

The Exterior Dot-1/4/9 Pro system is designed to display either Martin P3 creative LED-controlled or DMX-controlled lighting effects. It automatically recognizes and responds to Martin P3, Art-Net, sACN and RDM via Art-Net and sACN data signals.

Creating an Exterior Dot-1/4/9 Pro system

See the Exterior Dot-1/4/9 Pro User Manual and the detailed system diagrams available for download from the Exterior Dot-1/4/9 Pro area of the Martin website at www.martin.com for details of connecting and setting up an Exterior Dot-1/4/9 Pro system.

To create chains of Exterior Dot-1/4/9 Pro devices that can display P3 or DMX-controlled creative lighting effects:

1. Make sure that no devices in the installation can be connected to AC mains power until all installation work is complete.
2. Connect Exterior Dot-1/4/9 Pro devices together in chains either directly using the hybrid DCE connectors on the devices’ cable tails or by adding DCE-to-DCE hybrid extension cables with DCE connectors available from Martin (see the Exterior Dot-1/4/9 Pro area of the Martin website at www.martin.com for ordering information).

   Warning! Do not exceed the maximum number of devices per chain given in ‘Protection from electric shock’ on page 11.
3. If you have cut a cable, install a blanking cap available from Martin (see the Exterior Dot-1/4/9 Pro area of the Martin website at www.martin.com for ordering information) on the end of the cable to protect it from moisture, dirt etc.

Data and DC power source

Connect chains of Exterior Dot-1/4/9 Pro Dots to data and DC power at 15 volts from one of the following Martin devices only:

- Martin Exterior AC-Feeder connected to a data source and directly to AC mains power.
- Martin Exterior DC-Feeder connected to a hybrid 48 VDC power and data source via DCE cable.

Respect all safety limits and follow the instructions in the user documentation of the Exterior AC-Feeder or Exterior DC-Feeder and all other devices when setting up the system.

Maintenance

Warning! Read ‘Safety information’ on page 10 before carrying out service or maintenance. There are no user-serviceable parts inside. Do not open the housing. Refer any service operation not described in this manual to Martin Professional or its authorized service agents.

Installation, on-site service and maintenance can be provided worldwide by the Martin Professional Global Service organization and its approved agents, giving owners access to Martin’s expertise and product knowledge in a partnership that will ensure the highest level of performance throughout the product’s lifetime. Please contact your Martin® supplier for details.

Be aware that the output of LEDs, like all light sources, changes gradually over many thousands of hours of use. If you require products to perform to very precise color specifications, you may eventually need to make small readjustments at the lighting controller.

Cleaning

Regular cleaning is essential for service life and performance. Buildup of dust and dirt will reduce the Exterior Dot-1/4/9 Pro’s light output and cooling ability.

Cleaning schedules will vary greatly depending on the operating environment. It is therefore impossible to specify precise cleaning intervals for the Exterior Dot-1/4/9 Pro. Inspect devices within their first few weeks of operation to see whether cleaning is necessary. Check again at frequent intervals. This procedure will allow you to assess cleaning requirements in your particular situation. If in doubt, consult your Martin dealer about a suitable maintenance schedule.

Do not use products that contain solvents, abrasives or caustic agents for cleaning, as they can cause surface damage. The aluminum housing and front glass can be cleaned with mild detergents such as those for washing cars.

To clean the housing and front glass:

1. Isolate the installation from power and allow the device to cool for 20 minutes.
2. Visually check that the device, seals and cables are in good condition. If any seal or cable shows signs of damage, cracking or loss of water resistance, stop cleaning the device and contact a Martin authorized service technician for replacement.
3. Rinse off loose dirt with a hose or low-pressure water spray.
4. Wash the aluminum housing and front glass using warm water with a little mild detergent and a soft brush or sponge. Do not use abrasive cleaners.
5. Rinse with clean water and wipe dry.

Specifications

For full product specifications, see the Exterior Dot-1/4/9 Pro area of the Martin website at www.martin.com.

FCC compliance

This equipment has been tested and found to comply with the limits for a Class A digital device, pursuant to part 15 of the FCC Rules. These limits are designed to provide reasonable protection against harmful interference when the equipment is operated in a commercial environment. This equipment generates, uses, and can radiate radio frequency energy and, if not installed and used in accordance with the instruction manual, may cause harmful interference to radio communications. Operation of this equipment in a residential area is likely to cause harmful interference in which case the user will be required to correct the interference at his own expense.

FCC Supplier's Declaration of Conformity

This device complies with part 15 of the FCC Rules. Operation is subject to the following two conditions:

1. This device may not cause harmful interference, and
2. this device must accept any interference received, including interference that may cause undesired operation.

Canadian Interference-Causing Equipment Regulations – Règlement sur le Matériel Brouilleur du Canada

This Class A digital apparatus meets all requirements of the Canadian Interference-Causing Equipment Regulations. *Cet appareil numérique de la classe A respecte toutes les exigences du Règlement sur le Matériel Brouilleur du Canada.*

CAN ICES-003 (A) / NMB-003 (A)

EU Declaration of Conformity

An EU Declaration of Conformity covering this product is available for download from the Exterior Dot-1/4/9 Pro area of the Martin website at www.martin.com.

Disposing of the product

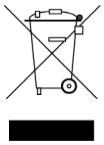

Martin products are supplied in compliance with Directive 2012/19/EC of the European Parliament and of the Council of the European Union on WEEE (Waste Electrical and Electronic Equipment), where applicable.

Help preserve the environment! Ensure that this product is recycled at the end of its life. Your supplier can give details of local arrangements for the disposal of Martin products