MAC Viper XIP

User Manual

with Safety and Installation Manual

Martin®

User documentation update information

Revision E

Added Stand-Alone mode, additional outdoor actions, fixture-to-fixture firmware upload, support for multi-universe overflow. Very slight increase in zoom angle at wide end of zoom range. Non-resettable counters GET command available via RDM. Several improvements for clarity.

Covers fixture firmware v. 1.2.x.

Revision D

Added FX macros, Framing Mode, rain sensor and outdoor use functions, service log, NFC functionality, control data source and power supply readouts, and information on storing the battery cover in the head air filter compartment when using a wireless Universal Connect Module. Added ‘Wet locations’ classification.

Covers fixture firmware v. 1.1.0.

Revision C

Added error message SRNM / SR NO MISMATCH. Added warning about opening fixture for service in dry conditions only.

Covers fixture firmware v. 1.0.0.

Revision B

First public release.

Covers fixture firmware v. 1.0.0.

©2024–2025 HARMAN PROFESSIONAL DENMARK ApS. All rights reserved. Features, specifications and appearance are subject to change without notice. HARMAN PROFESSIONAL DENMARK ApS and all affiliated companies disclaim liability for any injury, damage, direct or indirect loss, consequential or economic loss or any other loss occasioned by the use of, inability to use or reliance on the information contained in this document. Martin is a registered trademark of HARMAN PROFESSIONAL DENMARK ApS registered in the United States and/or other countries.

HARMAN PROFESSIONAL DENMARK ApS, Olof Palmes Allé 44, 8200 Aarhus N, Denmark
HARMAN PROFESSIONAL, INC. 8500 Balboa Blvd., Northridge CA 91325, USA

www.martin.com

MAC Viper XIP User Manual with Safety and Installation Manual, English, P/N 5145649-00, Revision E

Table of contents

Introduction 5
- Operating the fixture 5
- Applying mains power 6
- Cold starting 6

Connecting to data 6
- Data via DMX cable 6
- Data via Ethernet cable 7

Control options 9
- DMX 9
- P3 creative LED and video 9
- RDM 10

Effects 11
- Rotating gobos 11
- Animation wheel 14
- Light and heavy frost 14
- Rotating prism 14
- Iris 14
- Zoom 14
- Framing 15
- Zoom and focus 15
- FX: Pre-programmed effects macros 16
- LED frequency 16
- Pan and Tilt 16

Fixture setup 17
- Fixture ID 17
- DMX control mode 17
- DMX address 17
- DMX universe 17
- Network settings 17
- Pan/tilt inversion 18
- Pan/tilt speed 18
- Effects speed 18
- Pan and tilt limits 18
- Pan and tilt feedback 19
- Followspot mode 19
- Dimming curves 20
- Tungsten emulation 20
- Gobo CT correction 20
- Keylight calibration 20
- Color mode 21
- Focus tracking 21
- Video tracking 21
- Cooling mode 21
- Studio mode 22
- Outdoor operation and drying out function 22
- DMX reset enable 23
- Effect shortcuts 23
- Display on/off 23
- Display sleep 23
- Display rotation 23
- Display intensity 23
- Display contrast 24

Error display mode 24
Hibernation mode 24
Framing mode 24
Stand-alone operation 24
Storing and recalling custom settings 26
Resetting to factory defaults 26
Fixture information readouts 26
Fan cleaning 28
DMX LIVE signal monitoring 28
Manual control 28
Viewing stored status messages 28
Fixture test sequences 29
Resetting the fixture 29
Calibration 29
Adjustment menu (Martin Global Service only) 30
Loading factory default calibration values 31
Displaying test patterns 31
'Identify device' signal 31
Service log 31
Control panel 32
Using the control panel 32
Status LED 32
Battery power 33
Shortcuts 33
Settings stored permanently 33
Activating service mode 34
Using RDM 35
Martin Companion® and RDM 35
RDM functions 36
Using NFC 40
Control menus 41
DMX protocols 49
Basic DMX Mode 49
Extended DMX Mode 55
Ludicrous DMX Mode 61
Control/Settings DMX channel 62
FX 65
FX table 66
Pan/tilt and zoom orientation guide 70
Service messages 72
Accessories and service procedures 78
Uploading new firmware 78
Fixture-to-fixture firmware uploads 79
Installing a Universal Connect Module 80
Installing a Hexcel Louver 81
Installing a Concentric Ring louver 82
Installing a Followspot Handle 82
Removing the top head cover 83
Reinstalling the head cover 84
Internal effect module calibration 85
Replacing rotating gobos 85

Introduction

Warning! Before installing, operating or servicing the MAC Viper XIP lighting fixture, read the latest version of the fixture's Safety and Installation Manual, paying particular attention to the Safety Precautions section. The Safety and Installation Manual is supplied with the fixture and included at the back of this user manual. The latest version is also available for download from the MAC Viper XIP area of the Martin® website at www.martin.com.

Important! Full specifications for MAC Viper XIP fixtures and accessories are available in the MAC Viper XIP area of the Martin® website at www.martin.com.

Thank you for selecting the MAC Viper XIP lighting fixture from Martin.

This User Manual is a supplement to the Safety and Installation Manual that is supplied with the fixture and attached to the back of this User Manual. The User Manual contains information that is mainly of interest for lighting designers and operators, whereas the Safety and Installation Manual contains important information for all users, especially installers and technicians.

We recommend that you check the Martin website regularly for updated documentation. We publish revised versions each time we can improve the quality of the information we provide and each time we release new firmware with changes or new features. Each time we revise this guide we list any important changes on page 2 so that you can keep track of updates.

The output of LEDs, like all light sources, changes gradually over many thousands of hours of use. If you require products to perform to very precise color specifications, you may eventually need to make small readjustments at the lighting controller.

Operating the fixture

Before applying power to or operating the MAC Viper XIP:

- Read the 'Safety Information' section of the fixture's Safety and Installation Manual that is included at the end of this User Guide, supplied with the fixture and available for download from the Martin website at www.martin.com.
- Check that the installation is safe and secure.
- If the fixture is moved from a cold to a warm environment, remove it from its flightcase or packaging and give it at least two hours to acclimatize before applying power. This will help to avoid damage due to condensation.
- Check that the fixture is in perfect condition. Do not apply power to a fixture that is obviously damaged, or you may create a safety risk and make the damage worse.
- Check that the base is fastened securely so that the torque reaction when the head moves will not cause the base to move.
- Check that the head tilt lock is released.
- Be prepared for the head to move suddenly. Check that there will be no risk of collision with persons or objects.
- Be prepared for the fixture to light up suddenly. Check that no-one is looking at the fixture from close range.
- Check that the voltage and frequency of the power supply match the power requirements of the fixture.

Applying mains power

The fixture does not have an on/off switch. It becomes active as soon as AC mains power is applied at the power input connector. Be prepared for the head to move and for the fixture to suddenly emit bright light.

Each time power is applied to the fixture, it will reset all effects and functions to their home positions. A reset typically takes around 45 seconds.

Cold starting

At +5° C (41° F) and below, the fixture starts up in cold-start mode. In this mode, the current to some motors is increased and reset speed is reduced. This makes sure that the fixture can reset safely without any step loss. After a successful reset, the fixture stays in cold-start mode until it has warmed up. In cold-start mode there is a slight increase in noise from the fixture. Some effects (especially gobo changes and speed) are slower than normal.

The fixture begins to exit cold-start mode when it reaches an internal temperature of approximately 15° C (59° F). By the time it reaches 20° C (68° F) it has exited cold-start mode completely.

To warm up the fixture as quickly as possible, set LED output to full intensity. If you prefer the fixture not to project light during warmup, set the CMY and CTO flags to 99%, i.e. almost fully closed, and set all framing blades to 99%, i.e. almost fully inserted. Note that if you set framing blades to 100% (fully inserted), LED output will be shut down and the LED warmup effect will be lost.

Connecting to data

Warning! Before installing the MAC Viper XIP, read the latest version of the fixture's Safety and Installation Manual that is attached to the User Manual, paying particular attention to the 'Safety Precautions' section. Besides important safety information, the Safety and Installation Manual contains instructions for connecting to AC mains power.

When using the fixture outdoors or in any environment where water or humidity is present, use connectors rated minimum IP65.

If independent control of a fixture is required, it must have its own DMX channels. Fixtures that are required to behave identically can share the same DMX address and channels.

The number of fixtures that you can connect to DMX data in a daisy chain is limited by the number of DMX channels required by the fixtures. A maximum of 512 channels is available in one DMX universe. To add more fixtures or groups of fixtures when you no longer have enough DMX channels, add a DMX universe and another daisy-chained link.

The MAC Viper XIP has two pairs of connectors for control data In/Out:

- one pair of locking 5-pin XLR sockets that accept IP65-rated Neutrik TOP (or compatible) connectors, and
- one pair of etherCON sockets that accept IP65-rated Neutrik TOP (or compatible) Ethernet connectors.

All sockets are protected by rubber caps. Keep the rubber caps in place at all times on unused sockets.

Data via DMX cable

The MAC Viper XIP has 5-pin locking XLR sockets for DMX and RDM input and output via DMX cable. The pin-out on both sockets is:

• Pin 1 to shield

• Pin 2 to data 1 cold (-)

• Pin 3 to data 1 hot (+).

Pins 4 and 5 are not used by the fixture but are bridged between input and output sockets. These pins can therefore be used as a pass-through connection for an additional data signal if required.

Tips for reliable data transmission via DMX cable

- Use shielded twisted-pair high-quality DMX cable.
- 24 AWG cable is suitable for runs up to 300 meters (1000 ft). Heavier gauge cable and/or an amplifier is recommended for longer runs.
- Do not use microphone cable, as standard microphone cable does not have the correct impedance and cannot transmit control data reliably over long runs.
- To split the data link into branches, use an optically isolated splitter-amplifier. Use an RDM-compatible splitter-amplifier when using RDM.
- Do not overload the DMX data link. You can connect up to a maximum of 32 devices on a serial DMX link.
- Install a DMX termination plug at the end of the DMX link.

Connecting to data via DMX cable

To connect the fixture to DMX and/or RDM data carried over DMX cable:

1. Connect the DMX data output from the controller to the fixture's data input (male XLR) socket using good-quality DMX cable.
2. Run DMX cable from the fixture's data output (female XLR) socket to the data input of the next fixture and continue until the link is complete.
3. Terminate the data link by connecting a 120 Ohm, 0.25 Watt resistor between the data 1 hot (+) and cold (-) conductors at the end of the link. If the link is divided into branches using a DMX splitter, terminate each branch of the link.

Data via Ethernet cable

The MAC Viper XIP has etherCON data sockets that support Art-Net, sACN and Martin P3. Either socket can be used for input and the other socket used for throughput. The etherCON data sockets have a fail-safe bypass feature. This means that the fixture will relay a data signal from the socket used for input to the socket used for throughput even if power to the fixture is shut down or lost.

Tips for reliable data transmission via Ethernet cable

- Use shielded twisted-pair Ethernet cable of type S/UTP, SF/UTP, S/STP or SF/STP only. The cable must be rated Cat 5e or better.
- The cable shield must be electrically connected to connector housings, and the other devices on the data link must also support shielded connections.
- The MAC Viper XIP is compatible with 10/100 Mbit Ethernet only. Do not connect the fixture to a network port or device that is fixed to Gigabit Ethernet speed. If you need to integrate an MAC Viper XIP in a Gigabit Ethernet network, use a network switch to allow the link towards the fixture to operate at 100 Mbit/s Ethernet speed.
- To split the data link into branches, use a standard network switch that is able to operate at 100 Mbit/s towards the fixtures.
- Even though every fixture has a fail-safe bypass mechanism and minimal latency insertion, we recommend that you avoid connecting more than 50 devices in a single daisy-chain or branch.
- Unlike DMX cable, Ethernet cable does not require termination at the end of a daisy-chain of fixtures.

Connecting to data via Ethernet cable

To connect the fixture to Art-Net, sACN or Martin P3 via Ethernet cable:

1. Connect the Ethernet cable to either of the fixture's etherCON data sockets.
2. Run Ethernet cable from the fixture's other etherCON data socket to a data socket on the next fixture.

3. Continue connecting data sockets as described above until the link is complete.

Fail-safe connection

The fixture has a fail-safe network connection. If the fixture loses power or if you shut it down, it will continue to relay an Ethernet signal – the Art-Net / sACN / P3 signal to the other networked fixtures in the daisy chain will not be interrupted.

Data rate

Any Ethernet switch used to relay Art-Net, sACN or P3 data to the fixture must be capable of running at 10/100 Mbps speed, as the fixture does not support Gigabit Ethernet data rates.

Control options

You can control the MAC Viper XIP using DMX and/or Martin P3 protocol, and the fixture is also RDM-compatible. The fixture auto-senses the type of data that it is receiving and will respond correctly with no need for manual protocol selection.

The following options are available:

- DMX control over standard DMX cable connected to the fixture's 5-pin XLR connectors.
- DMX control using Art-Net over Ethernet cable connected to the fixture's etherCON connectors.
- DMX control using streaming ACN over Ethernet cable connected to the fixture's etherCON connectors.
- DMX control over DMX cable and P3 video data over Ethernet cable.
- P3 video data with embedded DMX commands over Ethernet cable. If you connect DMX / Art-Net / sACN to the P3 system controller, the controller can merge the DMX commands into the P3 signal and send them to the fixture over Ethernet.

The P3 Mix DMX channel lets you choose how the fixture should behave if it receives both DMX data and P3 video data. You can use the P3 video pixel data to control the intensity and/or the color of the fixture's output with real-time control.

UCM accessory

The fixture's UCM (Universal Connect Module) port lets you connect a wireless control receiver (available from different manufacturers).

Data rate

Any Ethernet switch used to relay Art-Net, streaming ACN or P3 data to the MAC Viper XIP must be capable of running at 10/100 Mbps speed, as the fixture does not support Gigabit Ethernet data rates.

DMX

The MAC Viper XIP accepts a DMX-512A data signal.

DMX setup

The DMX address, also known as the start channel, is the first channel used to receive instructions from the controller. For independent control, each fixture must be assigned its own control channels. If you give the same DMX address to two fixtures of the same type, they will behave identically. Address sharing can be useful for diagnostic purposes and symmetrical control, particularly when combined with the inverse pan and tilt options.

From firmware v. 1.2.x the fixture supports multi-universe overflow. If a fixture's DMX footprint exceeds the number of control channels available for the fixture in one DMX universe, the fixture automatically uses channels at the start of the next DMX universe.

DMX modes

You can set the MAC Viper XIP to one of three DMX operating modes: Basic, Extended and Ludicrous See the DMX Protocols section starting on page 49 of this manual for details of the commands available and number of DMX channels used in each DMX mode.

P3 creative LED and video

The MAC Viper XIP accepts video data using Martin's proprietary P3 video protocol that has been a well-established standard in the industry for over 15 years. It lets you send a video signal from a media server or other video source to P3-compliant creative LED fixtures and moving heads over Ethernet cable using Martin's reliable P3 data protocol.

The intuitive graphic user interface in Martin P3 controllers lets you visualize and set up a custom installation that can contain a huge number of fixtures in any kind of physical arrangement within a few minutes. Device identification is automatic. You can arrange devices on the monitor using drag-and-drop. Latency from video input to output on fixtures is extremely low, while there is no latency between fixtures as they are fully synchronized via the P3 protocol. If you use P3 you do not need to worry about IP addresses, as P3 does not use IP addresses or IP communication.

The P3 protocol will supply both DMX data and video pixel data to fixtures over a network cable. On the MAC Viper XIP you can use the video pixel data to control the intensity and/or the color of the fixture's output with real-time control using the P3 Mix DMX channel.

RDM

The MAC Viper XIP is compatible with RDM (Remote Device Management), which allows remote fixture setup and management over the DMX data link. See 'Using RDM' on page 35.

Effects

This section gives details of the effects available in the MAC Viper XIP. See the 'DMX protocols' section starting on page 49 for a full list of the DMX channels and values required to control the different effects.

Shutter and strobe effects

The fixture's electronic shutter effect provides instant blackout and snap open as well as regular or random strobe effects with variable speed from approximately 1 Hz to 20 Hz.

Dimming

Smooth 0-100% overall dimming is available with 16-bit control resolution. Four dimming curves are available (see 'Dimming curves' on page 20).

When Hybrid LED Dimming Mode is selected on channel 48 in Basic DMX Mode or channel 58 in Extended and Ludicrous DMX Modes, dimming is achieved using reduction in electrical current from 100% to 70% intensity, and dimming is achieved using PWM from 70% to 0% intensity.

CMY color mixing

The fixture features CMY color mixing with 16-bit resolution. Colors are obtained using continuously variable dichroic color flags with the following color characteristics:

- Cyan 529Y SP
- Magenta 606Y SP
- Yellow 519Y SP
- CTO 5800-3000Y SP

You may find it advantageous to deploy the Spectral Enhancement filter on the color wheel (see below) in combination with CMY color mixing.

Color wheel

See illustration on right. The fixture features a color wheel with five dichroic color filters plus open. Besides stepped color selection and variable wheel indexing, the color wheel also offers continuous scrolling with variable speed and direction, random colors and color shake.

You can use CMY color mixing in combination with the color wheel if you want to fine-tune a color.

You may find it advantageous to deploy the Spectral Enhancement filter in combination with CMY color mixing.

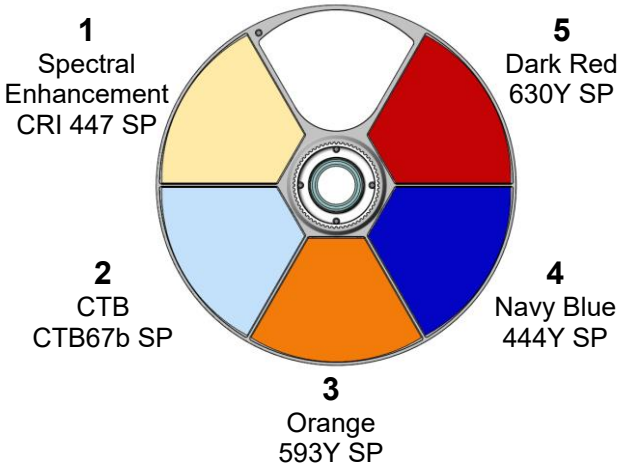

Rotating gobos

The gobos on Gobo Wheel 1 and 2 in the MAC Viper XIP have the same dimensions and specifications and are therefore interchangeable, but the goboholders on the two gobo wheels are different. You cannot move a goboholder from one gobo wheel to the other.

We number gobo wheels in Martin fixtures starting from the light source. In the MAC Viper XIP:

- The wheel closer to the LEDs is Gobo Wheel 1, the aerial effects wheel.
- The wheel closer to the front lens is Gobo Wheel 2, the breakup effects wheel.

Gobo Wheel 1 – aerial wheel

Gobo Wheel 1, the aerial effects wheel, has seven rotating gobos that can be used in any situation but are especially suitable for midair effects. Gobos can be selected, indexed (positioned at an angle), rotated continuously and shaken (bounced).

Gobo selection on Gobo Wheel 1 is done on channel 15 in all the fixture's DMX modes. This channel offers gobo selection, gobo shake, continuous gobo wheel rotation and random gobo selection.

The following two channels (channel 16 and 17) set gobo indexing or gobo continuous rotation with 16-bit control resolution. Both functions can be combined with any selection on channel 15. Making a change on channel 15 will not change the behavior selected on channels 16 and 17.

All gobos are interchangeable. Details of gobo replacement procedures are given towards the end of this manual.

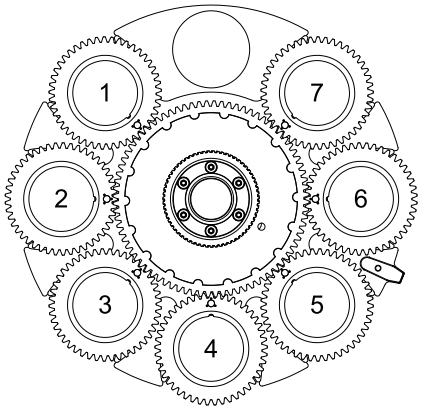

Gobo Wheel 1
(seen from LED side)

The slots on the rotating gobo wheel are ordered as shown on the right.

The fixture's standard gobos are shown in the correct order below.

1 **2** **3** **4** **5** **6** **7**

Slot	Gobo	P/N
1	Time Ripples	P/N: 5141771-00
2	Look Sharper	P/N: 5141772-00
3	Compass	P/N: 5141773-00
4	Deep Space	P/N: 5141774-00
5	Radar	P/N: 5141775-00
6	Short Cuts	P/N: 5141776-00
7	A Lot of Spot	P/N: 5141777-00

MAC Viper XIP Gobo Wheel 1

Gobo Wheel 2 - breakup wheel

Gobo Wheel 2, the breakup effects wheel, has seven rotating gobos that can be used in any situation but are especially suitable for breakup effects when used together with the animation wheel.

Gobo selection on Gobo Wheel 2 is done on channel 18 in all the fixture's DMX modes. This channel offers gobo selection, gobo shake, continuous gobo wheel rotation and random gobo selection.

The following two channels (channel 19 and 20) set gobo indexing or gobo continuous rotation with 16-bit control resolution. Both functions can be combined with any selection on channel 18. Making a change on channel 18 will not change the behavior selected on channels 19 and 20.

All gobos are interchangeable except Gobo 3 (Limbo), which is fused glass and is glued into the goboholder. Details of gobo replacement procedures are given towards the end of this manual.

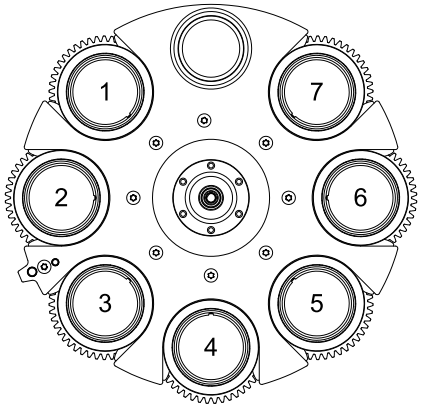

Gobo Wheel 2
(seen from LED side)

The slots on the rotating gobo wheel are ordered as shown on the right. The fixture's standard gobos are shown in the correct order below.

1 **2** **3** **4** **5** **6** **7**

Slot	Gobo	P/N
1	String Theory	P/N: 5141778-00
2	Hazey Waves	P/N: 5141779-00
3	Limbo	P/N: 5141840-00
4	Up Is Down	P/N: 5141780-00
5	Brush Up	P/N: 5141781-00
6	Sponge	P/N: 5141782-00
7	All Wrapped Up	P/N: 5141783-00

MAC Viper XIP Gobo Wheel 2

Animation wheel

The MAC Viper XIP is supplied with the “Worms That Turn” gobo animation wheel (P/N: 5139137-00) installed. The wheel can be used to add animation effects to gobo projections. When using gobo animation, adjusting the fixture’s focus will help obtain the most realistic results.

You can insert the animation wheel into the beam or select a gentle animation wheel shake (a gentle rocking movement) with variable speed on channel 21 in all the fixture’s DMX Modes. Once you have deployed the animation wheel on channel 21, you can select a static indexed angle, continuous animation wheel rotation or define the center angle for the animation wheel gentle shake with 16-bit resolution on channels 22 and 23 in all DMX Modes.

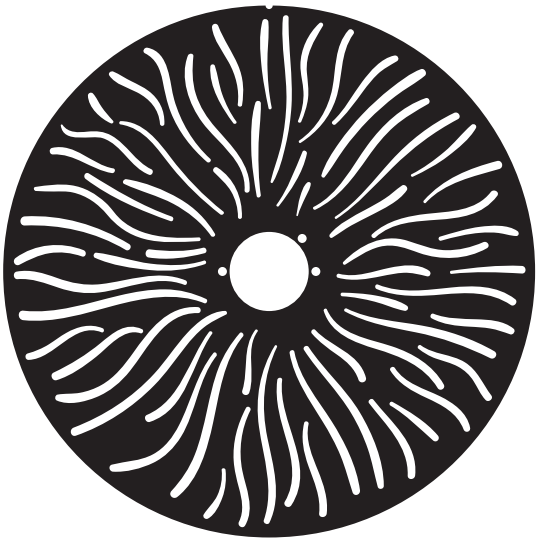

‘Worms That Turn’ gobo animation wheel

Light and heavy frost

The MAC Viper XIP features two frost filters that are controllable via DMX: a light and a heavy filter.

The light frost filter – Frost filter 1 - is mounted in the same plane as the prism inside the fixture, so you cannot use these two effects at the same time. If you try to deploy both effects at the same time, the prism takes priority. Deploying the light frost filter slightly limits the narrowest zoom angle available.

The heavy frost filter – Frost filter 2 – can be deployed at all times. Deploying the heavy frost filter slightly limits the narrowest zoom angle available.

Rotating prism

The MAC Viper XIP features a four-facet circular prism for multiple beam effects. The prism can be inserted into the beam at indexed angles, rotated with variable direction and speed or shaken with variable speed.

Inserting the prism slightly limits the narrowest zoom angle available.

Iris

The fixture has a motorized iris that can be set to a static aperture to narrow the beam. You can also set the iris to a dynamic opening or closing pulse with variable speed.

Zoom

Zoom control via DMX lets you vary the beam angle within this range:

- Wide
  - Beam angle (half-peak): 51.9°
  - Field angle (tenth-peak): 53.6°
  - Cutoff angle (3%): 53.9°
- Narrow
  - Beam angle (half-peak): 5.1°
  - Field angle (tenth-peak): 5.7°
  - Cutoff angle (3%): 5.9°

Framing

The MAC Viper XIP's framing module has 4 individually controllable framing blades with fully variable angle of +/-30° through the entire insertion path from 0-100% (full curtain). The whole framing module can rotate through +/-83°.

The framing blades have independent control of angle and amount of insertion for each blade. Adjusting these parameters gives enormous flexibility in forming the beam into shapes of different sizes with three or four sides. It is possible to angle the framing blades before inserting them into the beam – a feature that gives more creative possibilities.

With the fixture installed in a lighting rig with the head below the base and with the head the right way up, the framing blades are numbered counting clockwise from the 12 o'clock position:

- Blade 1 = Top
- Blade 2 = Right
- Blade 3 = Bottom
- Blade 4 = Left

16-bit control of framing blade position and angle and 16-bit control of framing module angle are available in Extended DMX Mode.

Two framing control modes are available from firmware v.1.1.0 (see 'Framing mode' on page 24).

Zoom and focus

Adjusting focus lets you vary the sharpness of projected images at different distances. It can be particularly effective when used together with gobos and the animation wheel.

The MAC Viper XIP's zoom lens varies the focused field angle from 5.7° to 51°. Wide zoom angles allow sharp focus on projection surfaces close to the fixture. At narrower zoom angles, sharp focus is only possible further from the fixture.

If zoom is set to the narrowest position, it is not possible to focus on all effects at all distances. So when Zoom/Focus tracking is disabled:

- You can find the narrowest zoom angle at which sharp focus is possible by setting focus to DMX value = 0, then starting at the narrowest zoom angle and gradually moving towards wide until you achieve sharp focus.
- At the widest zoom angle, simply set zoom to widest and adjust focus until you achieve sharp focus.

When Zoom/Focus tracking is enabled, we suggest that you set zoom to medium and then change the focus setting until you achieve sharp focus with the desired effect. Changing the zoom angle will now automatically change focus to keep a relatively sharp focus (some fine tuning may be necessary if you want the sharpest focus). Not all effects can be in sharp focus at all zoom settings. At some combinations of effect and distance, zooming to the widest or narrowest angles can cause loss of focus if the effect is no longer within its focusable zoom range at that distance.

Zoom/focus linking

Focus varies with zoom angle, but focus can be linked to zoom so that it automatically adjusts to match changes in zoom angle. Focus on rotating gobos matches zoom closely, while focus on the animation wheel matches zoom best in the center of the zoom range and slightly less precisely at the two extremes of the zoom range.

Linked zoom/focus works within 3 distance ranges: close-, medium- and long-range. The ranges are as follows (figures are approximate):

- Close (5 - 10 meters / 16.5 - 33 ft.)
- Medium (10 - 20 meters / 33 - 66 ft.)
- Long (20 meters - infinity / 66 ft. - ∞)

To link zoom and focus, select a distance range using the Control/Settings DMX channel, FOCUS TRACKING in the control panel PERSONALITY menu, RDM or a P3 System Controller. Then adjust focus to obtain the required degree of sharpness. Linking is now enabled and focus will auto-adjust to match changes in zoom angle.

CTO

16-bit color temperature control using the CTO flag in the CMY module is available on two channels in all the fixture's DMX modes. You can adjust the fixture's base color temperature from 5800 K to 2850 K.

CTC

8-bit color temperature control is available on a separate channel. You can adjust color temperature from 2000 K to 12 850 K.

The default DMX value on this channel is 114. At this value, color temperature is not modified. Changing the DMX value adjusts color temperature to a calibrated level on the black body curve. The fixture achieves this by automatically deploying the CMY and CTO flags.

Green/Magenta shift

Green/Magenta shift, or tint, can be adjusted from a Magenta shift (0.05 negative Duv) to Green shift (0.05 positive Duv).

The default DMX value on this channel is 127. At value 127-128, there is no green or magenta shift. Changing the DMX value moves the white point off the black body curve towards green or magenta while keeping the correlated color temperature unchanged. The fixture achieves this by automatically deploying the CMY and CTO flags.

FX: Pre-programmed effects macros

FX are implemented from MAC Viper XIP firmware version 1.1.0. See 'FX' on page 65 for a full list of the FX available.

You can quickly check which firmware version a fixture is running using the fixture's control panel, an RDM controller or a P3 system controller. For information on updating firmware, see 'Uploading new firmware' on page 78.

LED frequency

In all DMX modes, it is possible to adjust the LED refresh rate by +/- 2% relative to the standard PWM frequency of 2400 Hz.

The MAC Viper XIP features a Hybrid LED management setting that changes the LED dimming functionality from pure PWM dimming to combined analog/PWM dimming. Hybrid LED dimming is activated when the LED Frequency channel (48 in Basic Mode, 58 in Extended and Ludicrous Modes) is set to zero. The hybrid LED dimming setting reduces dimming switching noise. Note that when reducing light intensity using hybrid dimming, color temperature becomes warmer than when using pure PWM dimming.

Pan and Tilt

The MAC Viper XIP 's head can pan through a range of 540° and tilt through 268° with 16-bit control resolution available in all the fixture's DMX Modes.

See the pan/tilt orientation reference drawings at the end of this user manual for a guide to the direction of pan and tilt movement.

Fixture setup

You can adjust fixture settings using one or more of the following methods:

- The fixture's onboard control panel (see 'Control panel' on page 32)
- RDM (see 'Using RDM' on page 35)
- DMX (see 'Control/Settings DMX channel' on page 62)
- A Martin P3 System Controller
- NFC using the Martin Companion Mobile app (see 'Using NFC' on page 40).

Any changes that you make to the fixture's settings are stored in memory when the fixture is powered off.

Fixture ID

Available using: Control panel – RDM – P3 – NFC

FIXTURE ID lets you view or set a 4-digit custom ID number to help you identify the fixture. When you open this setting for the first time, the fixture displays its DMX address. It will continue to display this until you set an ID number for the fixture.

DMX control mode

Available using: Control panel – RDM – P3 – NFC

The MAC Viper XIP offers three DMX modes: Basic, Extended and Ludicrous. See the 'DMX protocols' section at the end of this manual for details of the DMX control options available in the different modes and the number of DMX channels used.

Because the fixture's DMX mode affects the number of DMX channels used, it will also affect the assignment of DMX addresses to fixtures. It is therefore a good idea to set the DMX mode of all the fixtures in the installation before you set their DMX addresses.

DMX address

Available using: Control panel – RDM – P3 – NFC

The DMX address, also known as the start channel, is the first channel used to receive instructions from a DMX controller. If you have a group of fixtures and you set the first fixture's DMX address to 1, the fixture will use DMX channel 1 and the channels above it (the number of channels used will depend on the fixture's DMX mode). The channels above these are available for the next fixture.

For independent control, each fixture must be assigned its own control channels. You can give the same DMX address to two fixtures of the same type if you want them to behave identically. Giving the same DMX address to multiple fixtures can be useful for grouped control and troubleshooting.

DMX universe

Available using: Control panel – RDM – P3 – NFC

It is possible to manually set the fixture's DMX universe from 1 to 63999.

From firmware v.1.2.x, fixtures that are connected via Art-Net, sACN or Martin P3 support multi-universe overflow (channels can start in one DMX universe and continue into the next DMX universe).

Network settings

Available using: Control panel – RDM – P3 – NFC

The following Ethernet settings are available:

- IP ADDRESS lets you view the fixture's IP address or manually set a new static IP address.
- SUBNET MASK lets you view the fixture's subnet mask or manually set a new subnet mask.

- MAC ADDRESS lets you view the fixture's 12-digit MAC address.
- RESET IP SETUP lets you clear all Ethernet settings and return the fixture to automatic IP addressing, in which the fixture auto-generates its own IP address based on its MAC address.

Besides the above, RDM also offers additional advanced network settings (see 'RDM functions' on page 36).

Pan/tilt inversion

Available using: Control panel – RDM – P3 – NFC

The PAN INVERT and TILT INVERT settings let you reverse the direction of pan and tilt. This can be useful if you want to create symmetrical effects with multiple fixtures, or if you want to coordinate the movement of fixtures that are standing on the floor with fixtures that are being flown upside down in a rig.

Pan/tilt speed

Available using: Control panel – DMX – RDM – P3 – NFC

The PAN / TILT SPEED setting has three options:

- STANDARD is designed to give a good compromise between speed and smoothness of pan and tilt movement.
- FAST optimizes pan and tilt movement for speed. Slow pan and tilt movement may be less smooth.
- SMOOTH optimizes pan and tilt movement for smoothness. Maximum pan and tilt movement speed is reduced.

Effects speed

Available using: Control panel – RDM – P3 – NFC

You can optimize effects movement depending on whether you want the fastest or the smoothest action. There are four options:

- STANDARD is designed to give a good compromise between speed and smoothness of effects movement.
- FAST optimizes effects movement for speed. Slow effects movement may be less smooth.
- SMOOTH optimizes effects movement for smoothness. Maximum effects movement speed is reduced.
- FOLLOW P/T sets effects movement to the option that is selected for pan and tilt movement (see above).

Pan and tilt limits

Available using: Control panel – DMX – RDM – P3 – NFC

The pan and tilt limit options let you define minimum and maximum limits for pan and tilt angles so that you can install fixtures close to obstacles (such as other fixtures or trusses) with no risk of collision, so that the beam will only hit a certain area of a stage or set, or so that you can avoid the fixture shining into the eyes of the audience, for example. If you set limits, the fixture's pan and tilt movement will remain in a 'safe zone' within those limits.

The STORE LOWER PAN LIMIT and STORE UPPER PAN LIMIT settings define the minimum and maximum limits for the fixture's pan range. STORE LOWER TILT LIMIT and STORE UPPER TILT LIMIT do the same thing for tilt range.

To set a limit, use the pan or tilt DMX channel to move the head to the position where you want to set the limit, then send the relevant STORE command for the amount of time required to activate it.

Once you have stored one or more pan and tilt limits, send an ENABLE PAN AND TILT LIMITS command to activate the limits. Sending a RESET PAN/TILT LIMITS command erases all the limits that have been stored.

An **LIM** message appears in the control panel display when one or more pan and tilt limits are active.

Note that when you power the fixture off, the head may move under its own weight to a position that is outside its pan and tilt limits.

Pan and tilt feedback

Available using: Control panel only

The fixture features pan/tilt position feedback sensors to ensure accurate positioning of the head.

Pan/tilt feedback is enabled by default. If you experience unexpected positioning behavior, it can be useful to disable the pan/tilt position feedback system using the SERVICE control menu.

Pan and tilt feedback error timeouts

If the fixture cannot find a correct pan and/or tilt position, it tries to find the position for ten seconds.

- If within that ten-second period it *finds* the correct position and can hold it for two seconds, it drops the ten-second period and returns to normal operation.
- If within that ten-second period it *cannot find* the correct position, it registers a pan/tilt feedback error, shuts down light output and stops responding to pan and tilt control input. This minimizes potential disruption during a show, for example.

If the fixture has registered a pan/tilt feedback error and shut down light output, a pan/tilt reset is required before it will return to normal operation.

Followspot mode

Available using: Control panel – DMX – RDM – P3 – NFC

A followspot mode is provided for use when a followspot handle is installed (see ‘Installing a Followspot Handle’ on page 82).

- ENABLE/DISABLE lets you disable the pan/tilt motors when using the fixture as a followspot. This setting lets you move the head manually.

  A followspot operator can enable and disable followspot mode at the fixture by holding the followspot handle to prevent any unwanted movement and then opening the PAN/TILT → FOLLOWSPOT MODE menu.
- The followspot operator can hold the head stationary while in followspot mode by activating the shortcuts menu in the control panel and selecting TOGGLE HOLD to ON. While toggled on, this setting holds the head in its current position. Toggling the setting to OFF releases the head.

  The TOGGLE HOLD setting is intended for use by the followspot operator and is therefore available in the shortcut menu of the fixture’s control panel only.

Dimming curves

Available using: Control panel – DMX – RDM – P3 – NFC

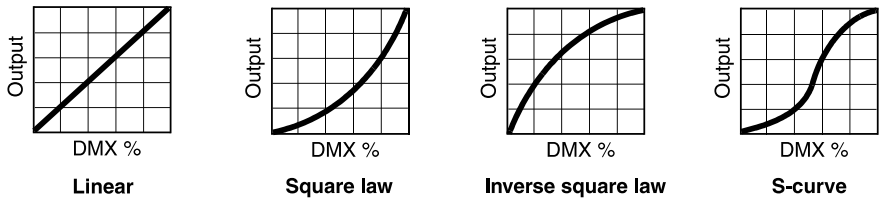

Linear **Square law** **Inverse square law** **S-curve**

Four dimming curves are available:

- LINEAR – The increase in light intensity appears to be linear as DMX value is increased.
- SQUARE LAW – light intensity control is finer at low levels and coarser at high levels.
- INVERSE SQUARE LAW – light intensity control is coarser at low levels and finer at high levels.
- S-CURVE – light intensity control is finer at low levels and high levels and coarser at medium levels.

Tungsten emulation

Available using: Control panel – DMX – RDM – P3 – NFC

In tungsten emulation mode, the fixture's white light output is warmer, the warm shift is increased at lower dimming levels, and response to fast changes in intensity is slower, giving an 'afterglow' effect after dimming. This mode gives the look and feel of a fixture that uses an incandescent light bulb as its source.

Gobo CT correction

Available using: Control panel – DMX – RDM – P3 – NFC

This setting compensates for any shift in color temperature by applying automatic CT correction when a gobo is inserted into beam.

Keylight calibration

Available using: Control panel – DMX – RDM – P3 – NFC

Recalibration may become necessary to keep the keylight characteristics of multiple fixtures consistent if you replace the CTO flag, CTB filter or spectral enhancement filter with a new one.

Adjusting keylight calibration involves setting the amount of Cyan, Magenta and Yellow that is added to the CTO flag, CTB filter or spectral enhancement filter in order to fine-tune the output characteristics across multiple fixtures. You carry out these adjustments remotely via DMX.

To adjust the keylight calibration settings in multiple fixtures:

1. Apply power to the fixtures that you want to calibrate and aim them at an even white surface.
2. On each fixture, go to the Control / Settings DMX channel, and hold the DMX value required for 'Start CTO keylight calibration', 'Start CTB keylight calibration' or 'Start spectral enhancement keylight calibration' for 5 seconds. The fixture will engage the CTO flag, CTB filter or spectral enhancement filter and set CMY to 0%.
3. On each fixture's CMY channels, adjust the CMY values until the output of all fixtures looks the same.
4. On the Control / Settings channel, hold the DMX value required for 'Store CTO keylight calibration', 'Store CTB keylight calibration' or 'Store spectral enhancement keylight calibration' for 5 seconds.

The fixture will now behave as follows:

- When keylight calibration is used in MANUAL mode, it will use the custom values stored using the above procedure.
- When keylight calibration is used in AUTOMATIC mode, it will use the values stored during the original calibration procedure at the factory.

Color mode

Available using: Control panel – DMX – RDM – P3 – NFC

The fixture offers three modes for managing color:

- DIRECT – Direct mode gives direct control of CMY flags with no adjustment for calibration.
- CALIBRATED – Calibrated mode provides calibration of the CMY flags. Calibrated Mode may be useful if you notice slight differences in color across multiple fixtures when using using CMY color mixing. Note that the colors obtained through CMY color mixing in Calibrated Mode may differ significantly from the colors obtained in Direct Mode. Multiple fixtures in the same installation should normally ALL be set to either Direct, Calibrated or Extended Gamut Mode in order to ensure the most consistent color behavior.
- EXTENDED GAMUT - Extended Gamut Mode gives improved color consistency across multiple fixtures but is also optimized for color saturation. Calibrated Mode (see above) provides calibrated CMY color mixing throughout the entire spectrum at the expense of slightly less saturated deep colors, but Extended Gamut Mode provides a combination of calibrated mixed colors and saturated deep colors.

Focus tracking

Available using: Control panel – DMX – RDM – P3 – NFC

FOCUS TRACKING sets focus to automatically adjust to match the fixture's zoom angle. You can enable or disable focus tracking, and you can optimize this feature to give the sharpest focus at far, medium or near projection distances. Focus tracking is disabled by default.

Regardless of whether focus tracking is enabled or disabled, you can always adjust focus via DMX.

Video tracking

Available using: Control panel – DMX – RDM – P3 – NFC

When VIDEO TRACKING is enabled, color fading is optimized for speed of color changes if used with a video source. The fixture does not 'smooth out' DMX input but instead snaps instantly when a DMX value changes. We recommend that you enable video tracking when displaying video.

When VIDEO TRACKING is disabled, color fading is optimized for smoothness. The fixture processes the DMX signal it receives, tracking (or smoothing out) changes in values in order to ensure smooth fading between colors and/or intensities. This signal processing takes fractions of a second and is normally invisible, but if the fixture is used to display video (using a Martin P3 System Controller, for example) the processing can interfere with video response times. We recommend that you disable video tracking during normal DMX control.

Cooling mode

Available using: Control panel – DMX – RDM – P3 – NFC

The cooling mode setting lets you decide whether to give priority to lowest cooling fan noise or maximum light output. Five settings are available:

- REGULATED FANS balances the fixture's noise and light output characteristics. Fans are at first set to a low speed that gives very low noise. If the fixture's operating temperature rises above the permitted range, fan speed is increased. If the fixture reaches maximum permitted operating temperature and full-speed fan operation is not enough to control fixture temperature, light output intensity is limited to keep the fixture within its operating temperature range.

- At the FULL setting, the fans operate at constant full speed without temperature regulation. This setting maximizes cooling and gives priority to the highest possible light output intensity. FULL fan mode can also be used as a quick way of dislodging dirt from fans. The fixture reduces light output if full fan speed is not enough to keep the fixture within its operating temperature limits.
- At the MEDIUM setting, the fans operate at constant medium speed without temperature regulation. The fixture reduces light output if medium fan speed is not enough to keep the fixture within its operating temperature limits.
- At the LOW setting, the fans operate at constant low speed without temperature regulation. The fixture reduces light output if low fan speed is not enough to keep the fixture within its operating temperature limits.
- At the ULTRA LOW setting, the fans operate at constant very low speed without temperature regulation in order to give the lowest possible noise level. The fixture reduces light output if ultra-low fan speed is not enough to keep the fixture within its operating temperature limits.

Because the MAC Viper XIP adjusts the maximum possible light output intensity level as a function of fixture temperature, the choice of cooling mode will affect the maximum intensity level available. The exact level will vary depending on factors such as ambient temperature, airflow in the installation etc., but to give an approximate indication, at ambient temperature 20–25° C (68–77° F) you can expect to obtain the following intensity levels in the fixture's different cooling modes relative to the CONSTANT FANS FULL mode:

- REGULATED FANS, *STUDIO MODE OFF*: 93%
- REGULATED FANS, *STUDIO MODE 1 ENABLED*: 83%
- REGULATED FANS, *STUDIO MODE 2 ENABLED*: 72%
- CONSTANT FANS ULTRA LOW: 77%
- CONSTANT FANS LOW: 93%
- CONSTANT FANS MEDIUM: 98%
- CONSTANT FANS FULL: 100%

Studio mode

Available using: Control panel – DMX – RDM – P3 – NFC

Studio mode limits maximum light intensity, reducing fan noise when the fixture is set to REGULATED FANS cooling mode. Two settings are available:

- STUDIO MODE 1 sets a 90% light intensity limit, and
- STUDIO MODE 2 sets an 80% light intensity limit.

Setting the fixture to Studio Mode offers the benefit of less noise and less CCT shift when dimming. This can be advantageous in applications where you want to keep color temperature as stable as possible when dimming.

Outdoor operation and drying out function

Available using: Control panel – DMX – RDM – P3 – NFC

From firmware v.1.2.x, the fixture has the following features to help you manage using the fixture outdoors:

- The fixture's rain sensor can tell you if the fixture is currently WET or DRY.
- Rain sensor data is logged so that you can also see the amount of time the fixture has been wet (a) since it was last powered on and (b) in its lifetime.
- The fixture can tell you what its current orientation is. Note that, if the fixture indicates that it is installed CONNECTORS UP in wet conditions, there is a risk that water will pool around connectors so you need to reposition the fixture. Do not position the fixture with its connections panel facing upwards in a wet location.

- If you run a DRY OFF procedure, the fixture sets effects to positions where they create heat to accelerate the drying of the outside of the fixture. Pan and tilt are set to their home positions. Placing a wet fixture in an enclosed space can lead to corrosion and condensation. If the fixture has been used in wet or damp conditions, run the DRY OFF procedure before putting the fixture into a flightcase or other container for storage or transport.
- The SAFE PARKING function moves the fixture head to a safe position where no water or snow can build up in front of the lens and where sunlight damage is avoided. To move the fixture out of the safe parking position and return to normal operation, you must send a STOP ACTIONS command or send a different outdoor actions command.

DMX reset enable

Available using: Control panel – RDM – P3 – NFC

This setting lets you decide whether it should be possible to send a reset command to the fixture via DMX. Disabling DMX RESET ENABLE makes it impossible to reset a fixture accidentally, an action that could cause a major disruption during a show.

Effect shortcuts

Available using: Control panel – DMX – RDM – P3 – NFC

If you enable EFFECT SHORTCUTS (also called parameter shortcuts), the color and gobo wheels take the shortest path between two colors or gobos, crossing the open position if necessary. This setting gives the fastest changes.

If you disable EFFECT SHORTCUTS, the color and gobo wheels will always avoid the open position when changing from one color or gobo to another. This avoids any flash of white light that may be visible if the wheel passes the open position.

Display on/off

Available using: DMX – P3 – NFC

You can black out and light up the fixture's onboard control panel display remotely from a DMX controller, P3 System Controller or from Martin Companion Mobile via NFC in order to limit distractions for the audience.

Display sleep

Available using: Control panel – RDM – P3 – NFC

You can set the fixture's onboard control panel display to remain permanently on, or enter sleep mode and black out after 2 minutes, 5 minutes or 10 minutes to limit distractions for the audience.

If the control panel is in sleep mode, it will light up again as soon as a button on the control panel is pressed. If ERROR DISPLAY MODE (see below) is set to NORMAL, the display will light up again if the fixture detects an error.

Display rotation

Available using: Control panel – RDM – P3 – NFC

You can set the orientation of the control panel display to NORMAL or ROTATE 180° (display inverted to make it easier to read if you install the fixture with the head hanging vertically downwards).

Display intensity

Available using: Control panel – RDM – P3 – NFC

You can set the brightness of the control panel display from 10% to 100%.

Display contrast

Available using: Control panel – RDM – P3 – NFC

You can set the contrast of the backlit LCD control panel display from 3% to 100%. The default setting is 41%.

Error display mode

Available using: Control panel – RDM – P3 – NFC

The fixture has two options for displaying any errors detected by the self-diagnostic system:

- SILENT disables the showing of error messages and warnings in the control panel display unless the display is activated manually by keypress. The status LED still lights amber to indicate a warning and red to indicate an error.
- NORMAL enables error messages and warnings in the control panel display. If the fixture needs to report an error, the display lights up and shows the error message. The status LED lights amber to indicate a warning and red to indicate an error.

Hibernation mode

Available using: Control panel – DMX – RDM – P3 – NFC

Hibernation mode sets light output intensity to zero and disables effect deployment. It brings power consumption down to around 6 W and provides an economical option if you want to keep power applied to the fixture when it is not in use. In a theatrical or architectural setting, for example, you can set up a cue at the controller that switches the fixture to hibernation mode during periods when the fixture is not active.

When you bring the fixture out of hibernation mode it performs a full reset, so be prepared for it to move.

Framing mode

Available using: Control panel – DMX – RDM – P3 – NFC

From firmware v. 1.1.0 the fixture offers two framing mode options that differ in the way the framing blades are managed to ensure that each blade does not contact or affect any other blade:

- LEGACY framing mode emulates a 2-layer framing system, like the one found in Martin's MAC Viper and MAC Encore fixtures. This mode limits framing blades to maximum 50% deployment at maximum DMX value. The corners of angled blades are also limited to maximum 50% deployment.
- STANDARD framing mode uses an algorithm which designates primary and secondary framing blades. Secondary blades must always make room for primary blades. Priority is given to angled blades.

Stand-alone operation

Available using: Control panel – DMX – RDM with Martin Companion – P3 – NFC

Note: *Stand-alone operation is implemented in the MAC Viper XIP firmware from v.1.2.x.*

In stand-alone operation, the fixture can show one or more scenes (a 'scene' is a programmed 'look' or combination of effects) with no controller connected.

Single-scene stand-alone

Using the DMX Control/Settings channel or the fixture's control panel, you can set up single-scene stand-alone operation as follows:

1. Using either DMX control or manual control in the fixture's control panel, set the fixture to display the scene that you want to store as the stand-alone scene.

2. Send a *Record Current Look* command using the Control/Settings DMX channel or the fixture's control panel to store that scene into the fixture's memory (note that sending this command will delete any previously stored scenes).
3. Set *Offline Mode* to *Run Stand-Alone Show* using the Control/Settings DMX channel or the fixture's control panel. The fixture will now show that scene at all times when it is powered on and not receiving a control signal.

   If the fixture receives a DMX control signal during stand-alone scene playback, it will immediately stop showing its saved scene. If the external control signal stops, if fixture power is cycled off and on again or if the fixture is reset, it will again show its saved stand-alone scene.
4. If you disable stand-alone operation, the fixture holds its last look if it stops receiving a control signal. However, disabling stand-alone operation does not delete the saved scene from memory: the scene will still be available if you enable stand-alone operation again.

Multi-scene stand-alone with Martin Companion

Using RDM via the Martin Companion Desktop application you can set up a single-scene or multi-scene stand-alone show. You can program up to 16 scenes with individual hold (scene duration) and fade (scene change) times. You can synchronize the stand-alone show in multiple fixtures. Martin Companion features an intuitive interface, so we only give brief details of stand-alone programming below.

To program a stand-alone show using Martin Companion:

1. Connect a PC running the Martin Companion application to the data link. If fixtures are connected via a traditional DMX512 link, you can connect the PC to the link using the Martin Companion USB-to-DMX hardware interface that is available from Martin suppliers. You can also connect the fixtures via standard network cable to the PC running Martin Companion Desktop.
2. Apply power to the fixtures on the link that you want to program.
3. Navigate to the Stand-alone screen in Martin Companion and wait for all fixtures to be discovered automatically. Then select which fixtures you want to program for stand-alone operation using the checkboxes in front of them.

   You can now:

   - click on **Create** to create a new stand-alone show for those fixtures, or
   - click on **Edit** to modify the stand-alone show already present inside the selected fixtures, or
   - click on **Clear Fixture(s)** to delete any previous stand-alone show from the selected fixtures.

   You can also load a previously created show from a file if you click on **Load Show**.
4. The rest of the stand-alone programming process is fairly intuitive in Martin Companion's interface.

Note that not all fixtures in a stand-alone show have to show the same scenes – it is possible to create a different scene for each fixture. Martin Companion automatically selects one fixture to act as the host in synchronized stand-alone operation (see below).

If you enable stand-alone operation, the host fixture will run its stand-alone show and send synchronizing signals to client fixtures (see below) at all times when it is powered on and not receiving a control signal.

If fixtures receive a control signal during stand-alone scene playback, they will immediately stop showing their stand-alone show. If fixture power is cycled off and on again or if the fixture is reset, it will again show its saved stand-alone show.

If you disable stand-alone operation, fixtures hold their last look if they stop receiving a control signal. However, disabling stand-alone operation does not delete the saved show from memory: the show will still be available if you enable stand-alone operation again.

Saving stand-alone shows in Martin Companion

Once you have created a stand-alone show, you can save it and recall it in the Martin Companion application.

Synchronized stand-alone operation

Can be set up using: Control panel – RDM with Martin Companion – NFC

Fixtures that are programmed together for stand-alone operation can be set up so that they play back their stand-alone scenes at the same time in synchronized stand-alone operation. Synchronization is possible when:

- fixtures are connected to each other on a data link (and set to the same DMX universe when connected via network cables),
- stand-alone operation is enabled in the fixtures,
- the fixtures are not receiving a signal from an external controller, and
- one fixture is set to be host while the other fixtures are set to be clients.

Martin Companion automatically configures synchronized stand-alone operation as follows:

- HOST – Martin Companion automatically sets one fixture on the link to act as the stand-alone host. The host fixture sends stand-alone scene change instructions to client fixtures and decides the fade (crossfade between scenes) and wait (scene duration) times of the client fixtures' stand-alone shows. The host fixture tells the client fixtures to go the next scene, but the lighting effect that each fixture uses in a specific scene is stored inside that fixture individually. This means that not all fixtures have to show the same lighting effect in each scene – only the fade and wait times are synchronized
- CLIENT – Client fixtures listen for and obey instructions from the host fixture. If they do not receive synchronizing signals from a host fixture, they do not run their programmed stand-alone show.

If you use the fixture's control panel, you can manually select from three STAND-ALONE MODE options:

- INDIVIDUAL – the fixture runs its own programmed stand-alone show and ignores any synchronizing signal.
- SYNC HOST – this manually sets the fixture to act as the stand-alone host as described above.
- SYNC CLIENT – this sets the fixture to act as the stand-alone client. If the client fixture does not receive synchronizing signals from a host fixture, they do not run their programmed stand-alone show.

Storing and recalling custom settings

Available using: Control panel only

The custom configuration function CUSTOM 1 - CUSTOM 3 allows you to save and recall up to three sets of fixture settings. These include all the settings in the PERSONALITY menu as well as the fixture's DMX address, DMX control mode and user-settable 4-digit fixture ID.

Resetting to factory defaults

Available using: Control panel – RDM – P3 – NFC

It is possible to return the fixture to its factory default settings, erasing any custom settings that you have configured.

Note that restoring factory default settings does not affect the fixture's calibration settings.

Fixture information readouts

Power on time

Available using: Control panel – RDM – P3 – NFC

The fixture has two counters that register the number of hours the fixture has been powered on:

- One counter registers the number of hours since manufacture and is not user-resettable.
- One counter can be reset by the user to keep track of hours since last service, for example.

Power on cycles

Available using: Control panel – RDM – P3 – NFC

The fixture has two counters that register the number of times power has been cycled off and on:

- One counter registers the number of power cycles since manufacture and is not user-resettable.
- One counter can be reset by the user to keep track of the number of power cycles since the last service, for example.

LED operating time

Available using: Control panel – RDM – P3 – NFC

The fixture has two counters that register the number of hours LEDs have been active:

- One counter registers the number of hours of LED operation since manufacture and is not user-resettable.
- One counter can be reset by the user to keep track of hours of LED operation since the last service, for example.

Firmware version

Available using: Control panel – RDM – P3 – NFC

The FIRMWARE command lets you see which firmware (fixture software) version is installed in the fixture.

Instructions for updating the firmware are given later in this user manual.

RDM unique ID number

Available using: Control panel – RDM – P3 – NFC

The fixture receives a unique 12-digit RDM ID number at the factory to allow RDM devices to identify it. You can view this number, but it is of course non-resettable.

Manufacturer's serial number

Available using: RDM – P3 – NFC

The fixture receives a unique serial number at the factory. You can view this number, but it is of course non-resettable.

Temperature readouts

Available using: Control panel – RDM – P3 – NFC

You can consult readings from all of the fixture's temperature sensors. When using the fixture's control menus, scroll through the list of sensors and press ENTER to view a readout. Press MENU to return to the list of sensors.

Temperatures are indicated in degrees Celsius.

Fan speeds

Available using: Control panel – RDM – NFC

The fixture is capable of telling you the speed in RPM of each of its cooling fans. When using the fixture's control menus, scroll through the list of cooling fans and press ENTER to view a fan speed readout. Press MENU to return to the list of cooling fans.

Fan cleaning

Available using Control panel – RDM – P3 – NFC

Fan cleaning mode sets the cooling fans to spin at maximum speed for a short period in order to dislodge dust, confetti, etc. from fan blades. The fan cleaning sequence is not enough to clean fan blades completely, but it removes large particles so it can be effective at removing the worst dirt between services while a fixture is still in the rig.

DMX LIVE signal monitoring

Available using: Control panel only

The DMX LIVE → SOURCE command lets you view the current control data source: No data being received / DMX / Art-Net / sACN / P3 / wireless Universal Connect Module,

You can view the DMX values 0 – 255 that are currently being received on each of the fixture's DMX channels in the control panel's DMX LIVE menu. This can be useful for troubleshooting purposes.

- RATE displays the DMX refresh rate in packets per second. Values lower than 10 or higher than 44 may result in erratic performance, especially when using tracking control.
- QUALITY displays the quality of the received DMX data as a percentage of usable packets from the data received. Values much below 100 indicate interference, poor connections, or other problems with the serial data link that are the most common cause of control problems.
- START CODE displays the DMX start code. Packets with a start code other than 0 may cause irregular performance.

Manual control

Available using: Control panel only

You can control all the fixture's effects (including pan and tilt), manage FX and store a stand-alone scene manually using the fixture's control panel without the need for a DMX signal.

To manually control the fixture:

1. Scroll to the MANUAL CONTROL menu and then use the UP and DOWN buttons to scroll to the effect that you want to control. Press ENTER.
2. Use the UP and DOWN buttons to scroll to the DMX value from 000 to 255 (or 000 to 65535 where 16-bit control is available) that you want to send to that effect. Press ENTER to confirm and send that value.
3. To return to the list of effects, press MENU.
4. If you want to manually control other effects together with the first effect, repeat steps 1. and 2. and 3. above for the other effects.

   The fixture will continue to show the effects that you have set manually until you set new manual control values for the effects.
5. If you press the MENU button and exit the MANUAL CONTROL menu after you have set the fixture to show effects, the fixture will continue to show those effects until:
   - you enter the MANUAL CONTROL menu and disable the effects,
   - the fixture receives another control signal, or
   - you cycle fixture power / carry out a reset.

Viewing stored status messages

Available using: Control panel, RDM

It is possible to view a list of up to twenty status (error and warning) messages that the fixture has stored using either the SERVICE menu in the fixture's control panel or an RDM-compatible DMX controller.

Fixture test sequences

Available using: Control panel – RDM – P3 *– NFC*

You can run an automatic sequence to test all the fixture's effects or manually test individual effects.

Automatic effects test

When using the fixture's control panel, test all the effects as follows:

1. Scroll to TEST → TEST ALL and press ENTER to confirm. The automatic test will run.
2. To stop the test and return to the previous level of the menu structure, press MENU.

Manual effects tests

When using the fixture's control panel, test individual effects as follows.

To test LED dimming:

1. Scroll to TEST → TEST DIMMER and press ENTER.
2. To stop the test and return to the previous level of the menu structure, press MENU.

To test an individual effect:

1. Select TEST → TEST EFFECTS and press ENTER.
2. Use the DOWN and UP buttons to scroll through all the fixture's effects.
3. When you have reached the effect that you want to test, press ENTER to confirm your selection. The fixture will now run an automatic test of that effect.
4. Press MENU to exit the test and return to the list of effects.

To manually test pan and tilt:

1. Select TEST → TEST PAN/TILT and then either PAN or TILT.
2. Press ENTER. The fixture will now run an automatic test of pan or tilt functionality.
3. To stop the test and return to the previous level of the menu structure, press MENU.

Resetting the fixture

Available using: Control panel – DMX – RDM – P3 – NFC

You can reset the entire fixture, returning it to its state when first powered on. Be prepared for the head to move through its full range of pan and tilt movement while pan and tilt resets. The reset process takes several seconds.

Calibration

Available using: Control panel – DMX

The SERVICE → CALIBRATION control menu and the Control/Settings DMX channel let you define custom offsets in the fixture software to adjust the positions of pan, tilt and effects relative to the DMX values the fixture receives. Creating calibration offsets allows you to fine-tune fixtures and achieve uniform behavior in multiple fixtures.

Martin fixtures are adjusted and calibrated at the factory, and further calibration should only be necessary if fixtures have been subjected to abnormal shocks during transport or if normal wear and tear has affected alignment after an extended period of use. You can also use calibration to fine-tune fixtures for a particular location or application.

Calibrating focus at the open gobo position lets you adjust the fixture's beam between soft-edged and hard-edged when no gobo is being projected.

We recommend using one of the following two procedures to adjust calibration settings.
When you have calibrated effects using one of these two procedures, the fixture will remember any

new calibration values that you have set, and the new positions will not be affected by powering the fixture off and on.

Calibration procedure

First, aim a reference fixture and the fixtures that you want to calibrate at a flat surface. You can calibrate fixtures one at a time or line up multiple fixtures in a row.

Apply power and set pan, tilt and effects to the same DMX values.

Calibration using the fixture's control panel

To calibrate effects positions using control panel, for each fixture that you want to calibrate:

1. Open the SERVICE → CALIBRATION menu.
2. Scroll through the effects until you reach the effect that you want to calibrate. Press ENTER to select that effect.
3. Adjust calibration by scrolling through the values while comparing the light output with the reference fixture.
4. When you are happy with a calibration value, press ENTER to confirm and then press MENU to return to the list of effects.
5. Continue scrolling through the effects, repeating the above process to calibrate individual effects.
6. When you have finished calibrating the last effect, press and hold MENU to exit.

Calibration using the Control/Settings DMX channel

To calibrate effects positions using DMX, for each fixture that you want to calibrate:

1. Set the first effect that you want to calibrate to a specific value via DMX (for example, set all the fixtures in a group to the same DMX value in the middle of the range on the zoom channel).
2. Select 'Enable calibration' on the Control/Settings DMX channel and hold for 5 seconds to activate.
3. The fixture now registers the current positions of all effects and holds them there. To select an effect to adjust, you must first release it from its hold position by changing the value on its DMX channel by +/- 10%. The effect then returns to its hold position. The effect's DMX channel now represents the full calibration range. The range can vary but is typically +/- 5-10%. In this case you can adjust the effect's position using that effect's DMX channel (8- or 16-bit) as follows:
   - DMX value 0 = -5%
   - DMX value 127/32767 = 0%
   - DMX value 255/65535 = +5%.
4. Adjust the effect until it is in the required position (for example, adjust the zoom angle on each fixture in the group until the angle on all fixtures is identical – this is the position that you will obtain when you send DMX value 200).
5. Send a 'Store XXX calibration' command on the Control/Settings channel for each effect that you adjust and hold that command for 5 seconds to activate. The new calibration offset is now stored in memory.
6. When you have finished adjusting calibration offsets, send value 0 on the Control/Settings channel and hold for 5 seconds to exit the DMX calibration procedure and return to normal DMX control.

Adjustment menu (Martin Global Service only)

Available using: Control panel only.

Important! The SERVICE → ADJUST menu contains procedures that are for use during mechanical adjustment by Martin Global Service or authorized Martin service partners only. Do not enter the ADJUST menu without service documentation from Martin, or you may cause damage to the fixture that is not covered by the product warranty.

Pan/tilt auto-calibration

The control panel SERVICE → ADJUST menu contains a command that starts a pan and tilt auto-calibration sequence. Pan and tilt move through their full movement range during auto-calibration. Make sure that the fixture is secure and that there is space around the head for full pan and tilt movement before you start this sequence.

Loading factory default calibration values

Available using: Control panel – DMX

The fixture keeps the original factory-set calibration values in memory even if you have set custom calibration values using one of the procedures outlined above. You can erase any custom calibration values that you have defined and reload the default factory calibration values by applying a SERVICE → CALIBRATION → LOAD DEFAULTS → LOAD command.

Overwriting factory default calibration values

Available using: Control panel only

It is possible to overwrite the factory-set calibration values and replace them with the currently defined calibration values, but take care when doing this. Please contact Martin Service if you have any questions about making this change.

Important! Overwriting factory default calibration values with custom values is permanent. If you have set a custom value and applied a CALIBRATION → LOAD DEFAULTS → SAVE ***command, you will not be able to recover the original factory default value.***

To overwrite the factory default calibration values:

1. Set new calibration values for the effects that you want to recalibrate using one of the two procedures outlined above.
2. Apply a SERVICE → CALIBRATION → SAVE DEFAULTS → SAVE command. **Important! This command will permanently overwrite the factory default calibration settings.**

Displaying test patterns

Available using: P3

It is possible to display test patterns, adjust test pattern intensity and override any DMX signal that the fixture is receiving using a Martin P3 System Controller.

‘Identify device’ signal

Available using: RDM – P3 – NFC

The **Identify Device** command makes the fixture flash a signal and move the head so that you can identify it in the rig.

Service log

Available using: Control panel

The SERVICE LOG → EXPORT command in the control panel’s SERVICE menu lets you take a snapshot of all the fixture’s settings and all the data stored in memory to a USB flash memory drive inserted in the USB port located behind the cover to the right of the control panel. The settings and data include such information as current status messages and a status message history, rain sensor data, DMX address, DMX universe, IP address and MAC address, current values for all the fixture’s counters, current status of all the fixture’s settings etc.

The SERVICE LOG → CLEAR command lets you delete all stored status messages permanently from the fixture’s memory.

Control panel

This section explains how to use the fixture's onboard control panel and control menus. You can find a complete map of the control menu structure in 'Control menus' on page 41.

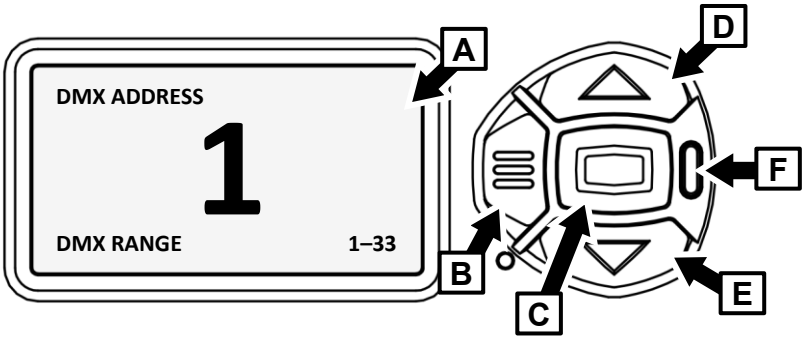

A – Control panel display

B – **Menu** button

C – **Enter** button

D – **Up** button

E – **Down** button

F – Status LED

When the fixture is powered on, it first boots and resets, then it displays its DMX address (or its fixture ID number, if one has been set) and any status messages in the display A.

The display can be set to automatically rotate to match standing or hanging fixture orientation in the PERSONALITY → DISPLAY menu or the Shortcuts menu (see "Shortcuts" on page 33).

Using the control panel

- Press the MENU button **B** or Enter button **C** to access the menus.
- Use the UP and DOWN buttons **D** and **E** to scroll up and down menus.
- Press the ENTER button **C** to enter a menu or make a selection.
- The currently selected menu item is indicated by a star: ✻
- Press the MENU button **B** to step backwards through the menus.

Status LED

The LED **F** next to the control buttons indicates fixture status by showing a color and DMX status by flashing or lighting constantly:

- GREEN: All parameters normal.
- AMBER: Warning (service interval exceeded, for example).

  If ERROR MODE is set to Normal, the warning message will be shown in the display. If ERROR MODE is set to Silent, the display must be activated by pressing the Enter button **C** to display the warning message.
- RED: Error detected.
  - If ERROR MODE is set to NORMAL, the error message will be shown in the display.
  - If ERROR MODE is set to SILENT, display the error message by entering the menus and going to SERVICE → ERROR LIST.
- FLASHING: No DMX signal detected.
- CONSTANT: Valid DMX signal detected.

If a valid DMX signal is detected and there are no warnings/errors, the status LED remains active but it turns off when the display turns off.

Battery power

Warning! The fixture's lithium battery is not rechargeable. Do not try to recharge it. If the battery is discharged, obtain a replacement from your Martin supplier.

The MAC Viper XIP contains a CR123A 3-volt lithium battery behind a cover next to the control panel. The battery gives access to the most important functions in the control panel when the fixture is not connected to AC power. The following functions are available on battery power:

- DMX address
- DMX Mode (Basic, Extended or Ludicrous)
- Fixture ID
- Personality settings
- Default fixture settings
- Information (Power On Hours and Power Cycles counters, Software version)
- Error list.

To activate the display when the fixture is not connected to power, press the MENU button **B**. Press again to enter the menus. The display extinguishes after 10 seconds with no user input and the control panel is de-activated after 1 minute with no user input. Press the MENU button **B** again to re-activate.

Shortcuts

If you hold the MENU button **B** pressed in for 2 - 3 seconds, a shortcut menu with the most important commands appears. Select a command with the UP and DOWN buttons and press the ENTER button **C** to activate, or press the MENU button **B** again to cancel.

- RESET ALL resets the whole fixture.
- ROTATE DISPLAY rotates the fixture's control panel display 180°.
- FOLLOWSPOT TOGGLE puts the fixture into / takes the fixture out of Followspot Mode, and
- TOGGLE HOLD POSITION uses the pan and tilt motors to hold the head in its current position until position hold is toggled off again (see 'Followspot mode' on page 19).
- SERVICE LOG executes the SERVICE LOG → EXPORT command described in 'Service log' on page 31. It exports a copy of all the fixture's stored data and settings to any USB flash drive that is inserted in the USB port behind the battery cover.

Settings stored permanently

The following settings are stored permanently in the fixture memory and are not affected by powering the fixture off and on or by updating the fixture software:

- DMX address
- DMX Mode
- Fixture ID
- Personality settings (pan/tilt, cooling, dimming curve, DMX reset, effect shortcuts, display settings, error mode, etc.)
- Resettable and non-resettable counters
- Service settings (adjustment, calibration)

These settings can be returned to factory defaults using the control menus or via DMX.

Activating service mode

Holding the MENU and ENTER buttons both pressed in while powering the fixture on puts the fixture into service mode, in which pan and tilt are disabled and a SERV warning appears in the display.

Service mode removes the risk of unexpected head movement during service adjustments.

To take the fixture out of SERVICE mode, power the fixture off, then reapply power and allow the fixture to start normally.

Using RDM

RDM can be used to adjust many fixture settings and view readouts. This chapter gives information on using the Martin Companion Windows software application to set up and manage the MAC Viper XIP via RDM. While we recommend the use of Martin Companion, most of the commonly available RDM controllers also support the MAC Viper XIP. Check with the controller manufacturer if you cannot find the Martin MAC Viper XIP in the list of supported fixtures. The exact procedures and command names used by different RDM controllers vary.

Setting up single or multiple fixtures

You can set behavior in one fixture by sending a unicast RDM command to that one fixture only, or you can set behavior in all the fixtures on the data link by sending a broadcast RDM command to all the fixtures.

Martin Companion® and RDM

To set up MAC Viper XIP fixtures via RDM, we recommend using the **Martin Companion Cable** PC-to-DMX interface that is available as an accessory from Martin suppliers. This tool plugs into the USB port of a Windows PC and connects to Martin fixtures over the DMX data link via a 5-pin XLR connector. You can also connect the fixtures via standard network cables to a PC running Martin Companion Desktop.

The Martin Companion Cable is designed to work together with the **Martin Companion Desktop** software suite for Windows desktop and laptop PCs. Martin Companion Desktop can be downloaded free of charge from the Martin website at www.martin.com. Martin Companion will always offer the latest MAC Viper XIP features and firmware when your PC is connected to the Internet.

Instructions for connecting the Martin Companion Cable are supplied with the tool and can also be downloaded from the Martin website.

Martin Companion offers the following features:

- Simple PC-based user interface
- Update of fixture firmware
- RDM configuration and DMX addressing
- Stand-alone show programming with automatic start when fixtures are powered on.

RDM functions

A full list of the RDM functions that MAC Viper XIP fixtures support is given at the end of this chapter. We refer to these functions using the more specific term ‘PIDs’ (‘Parameter IDs’).

Fixture discovery

Before you can communicate with fixtures using RDM, you must send a fixture discovery command to all the devices on the data link so that the RDM controller can identify them. It does this by retrieving each device’s factory-set unique identifier (UID). This process can take some time, depending on the number of devices on the link.

To identify the fixtures on the link:

1. Check that the fixtures are correctly connected to the RDM controller on the data link and that power is applied to all fixtures.
2. Send a discovery command via RDM (Martin Companion does this automatically as soon as the cable is connected).
3. Give the controller time to identify the devices on the link and prepare for communication with the devices.

Supported parameters

MAC Viper XIP fixtures can communicate their supported control parameters to the RDM controller and give brief information on each parameter.

Example: setting a DMX address

You can set the DMX address of a fixture (or fixtures) on the data link via RDM. An example procedure from Martin Companion v. 2.0 might look like this, but the procedure will vary depending on which RDM controller you use:

1. Check that fixtures are powered on a connected to data over the DMX/RDM link.
2. Connect the Martin Companion Cable to your computer and to the DMX/RDM link.
3. Start the Martin Companion application.
4. Navigate to the **RDM** view in Martin Companion.
5. Wait until RDM Discovery has completed. This happens automatically, you just need to wait for the Discovery icon top right to stop blinking.
6. Navigate to the **Patch** tab and check the **Mode** and **Address** columns.
7. Update the values in those columns to change the DMX mode and/or DMX start address for the selected fixtures.

Status messages

The MAC Viper XIP features a self-diagnostic system that detects any issues concerning correct operation or safety (temperature that exceeds safe level, for example) and communicates the issues as status messages or warnings. These messages can be useful in connection with service and maintenance. Error messages appear in the fixture's control panel display, but you can also call them up via RDM.

It is possible to:

- Call up a list of any status messages that the fixture has stored in memory.
- View information on the messages.
- Clear the stored list of status messages.

RDM functions

MAC Viper XIP fixtures support the following RDM PIDs:

PID	Name	Description	GET	SET
Device discovery				
0x0001	DISC_UNIQUE_BRANCH	Fixture discovery	N/A	N/A
0x0002	DISC_MUTE	Fixture discovery	N/A	N/A
0x0003	DISC_UN_MUTE	Fixture discovery	N/A	N/A
Device information				
0x0060	DEVICE_INFO	Get basic fixture info	✓	
0x0080	DEVICE_MODEL_DESCRIPTION	Product name	✓	
0x0081	MANUFACTURER_LABEL	Manufacturer name	✓	
0x0082	DEVICE_LABEL	Info label (user-settable)	✓	✓

PID	Name	Description	GET	SET
0x8003	FIXTURE_ID	Fixture number (user-settable)	✓	✓
0x8700	SERIAL_NUMBER	Fixture serial number	✓	
0x00C0	SOFTWARE_VERSION_LABEL	Firmware version	✓	
0x0200	SENSOR_DEFINITION	Sensor description	✓	
0x0201	SENSOR_VALUE	Sensor value	✓	✓
0x0400	DEVICE_HOURS	Fixture hours counter (resettable)	✓	✓
0x0401	LED_HOURS	Fixture LED hours counter (resettable)	✓	✓
0x0405	DEVICE_POWER_CYCLES	Fixture power cycles counter (resettable)	✓	✓
0x870A	DEVICE_HOURS_TOTAL	Read fixture hours counter (non-resettable)	✓	
0x870B	LAMP_HOURS_TOTAL	Read LED hours counter (non-resettable)	✓	
0x870C	POWER_CYCLES_TOTAL	Read Fixture power cycles counter (non-resettable)	✓	
DMX setup				
0x00E0	DMX_PERSONALITY	DMX mode	✓	✓
0x00E1	DMX_PERSONALITY_DESCRIPTION	DMX mode details	✓	
0x00F0	DMX_START_ADDRESS	DMX start address	✓	✓
0x0121	SLOT_DESCRIPTION	DMX channel details	✓	
Ethernet setup				
0x0700	LIST_INTERFACES	List Ethernet ports	✓	
0x0701	INTERFACE_LABEL	Name of Ethernet port	✓	
0x0702	INTERFACE_HARDWARE_ADDRESS_TYPE1	MAC address of Ethernet Port	✓	
0x0703	IPV4_DHCP_MODE	Enable DHCP client	✓	
0x0705	IPV4_CURRENT_ADDRESS	Get current IP address	✓	
0x0706	IPV4_STATIC_ADDRESS	Set static IP address	✓	✓
0x0709	INTERFACE_APPLY_CONFIGURATION	Apply Ethernet configuration		✓
Device management				
0x0050	SUPPORTED_PARAMETERS	Parameter discovery	✓	
0x0051	PARAMETER_DESCRIPTION	Parameter discovery	✓	
0x0090	FACTORY_DEFAULTS	Reset to factory defaults	✓	✓
0x1000	IDENTIFY_DEVICE	Identify fixture in rig	✓	✓

PID	Name	Description	GET	SET
0x1001	RESET_DEVICE	Reset fixture		✓
0x1020	PERFORM_SELFTEST	Run self-test	✓	✓
0x1021	SELF_TEST_DESCRIPTION	Self-test description	✓	
0x0500	DISPLAY_INVERT	Flip display	✓	✓
0x0501	DISPLAY_LEVEL	Set display intensity	✓	✓
0x0600	PAN_INVERT	Invert pan	✓	✓
0x0601	TILT_INVERT	Invert tilt	✓	✓
0x8001	DMX_RESET	Enable fixture resettable via DMX	✓	✓
0x8301	EFFECT_SPEED	Set effects speed	✓	✓
0x8302	EFFECT_SHORTCUTS_ENABLE	Enable effect shortcuts (parameter shortcuts)	✓	✓
0x8308	DISPLAY_ERRORS_ENABLE	Show errors in display	✓	✓
0x8310	DIMMER_CURVE	Set dimmer curve	✓	✓
0x8004	COLOR_MODE	Set color mode	✓	✓
0x8311	FOCUS_TRACKING	Set focus tracking	✓	✓
0x8325	VIDEO_TRACKING	Set video tracking	✓	✓
0x8312	DISPLAY_AUTO_OFF	Enable onboard display auto off	✓	✓
0x8326	DISPLAY_CONTRAST	Set onboard display contrast	✓	✓
0x8329	HIBERNATION_MODE	Enable hibernation mode	✓	✓
0x832A	TUNGSTEN_MODE	Enable tungsten mode	✓	✓
0x832D	GOBO_CT_CORRECTION	Enable CT correction when gobo deployed	✓	✓
0x8330	STUDIO_MODE	Off, Studio Mode 1, Studio Mode 2	✓	✓
0x8331	KEYLIGHT_CALIBRATION	Keylight calibration Auto / Manual / Off	✓	✓
0x8337	OUTDOOR_ACTIONS	0 = Stop outdoor actions 2 = Run dry off function, 3 = Go to safe parking position,	✓	✓
0x833E	FRAMING_MODE	Framing options Standard / Legacy	✓	✓
0x8400	PAN_TILT_SPEED	Set P/T speed	✓	✓
0x8402	PAN_TILT_LIMITATION_ENABLE	Enable P/T limits	✓	✓
0x8403	PAN_LIMITATION_MINIMUM	Pan minimum limit	✓	✓
0x8404	PAN_LIMITATION_MAXIMUM	Pan maximum limit	✓	✓
0x8405	TILT_LIMITATION_MINIMUM	Tilt minimum limit	✓	✓

PID	Name	Description	GET	SET
0x8406	TILT_LIMITATION_MAXIMUM	Tilt maximum limit	✓	✓
0x8409	PAN_TILT_LIMITATION_RESET	Reset P/T limits		✓
0x8500	FOLLOW_SPOT_MODE_ENABLE	Enable followspot mode	✓	✓
0x8603	FAN_CLEAN	Activate fan cleaning	✓	✓
0x8604	FAN_MODE	Select cooling fan mode	✓	✓
Stand-alone control via Martin Companion				
0x1030	CAPTURE_PRESET	Capture current 'look' and store as preset		✓
0x1031	PRESET_PLAYBACK	Play back any of the stored presets	✓	✓
0x8220	MANUAL_MODE_OVERRIDE	Override DMX control with values sent via RDM	✓	✓
0x810B	PRESET_PLAYBACK_LIMIT	Sets total number of scenes in Stand-Alone mode	✓	✓
0x8101	SYNCHRONIZED	Sets fixture to Individual, Sync Host or Sync Client Stand-Alone Mode	✓	✓
0x810C	OFFLINE_MODE	Behavior when fixture is not receiving DMX: Hold Last Look or Run Stand-Alone Show	✓	✓
0x810D	STAND-ALONE_CTRL_MODE	Gets the currently setup stand-alone control mode (the control mode for the currently programmed scene).	✓	
Status messages				
0x0020	QUEUED_MESSAGE	Get queued messages	✓	
0x0030	STATUS_MESSAGES	Get status/error information	✓	
0x0031	STATUS_ID_DESCRIPTION	Status/error description	✓	
0x0032	CLEAR_STATUS_ID	Clear status/error queue		✓

Using NFC

The MAC Viper XIP has an NFC interface which lets you configure and read out information from the fixture using an NFC-capable cellphone with the Martin Companion Mobile app (available for Android and iOS) installed.

You can carry out the following actions via the NFC interface using the Martin Companion app:

- Adjust all the settings that are available in the fixture's onboard control menus (set DMX mode, set DMX address, select dimmer curve, select fan mode etc.)
- Monitor the fixture (read out fixture sensor data, error codes, usage data, serial numbers, firmware version etc.)
- Trigger quick actions on the fixture (reset to factory defaults, reset pan/tilt limits, run a self-test etc.)

To use the NFC interface:

1. Download the Martin Companion app to your cellphone from the Apple App Store or Google Play Store.
2. Check that NFC is enabled on the cellphone.
3. Hold the cellphone with its NFC antenna directly in front of the fixture display as shown in the photo on the right. The fixture's NFC antenna is located directly behind the control panel display.

   The location of the cellphone NFC antenna is different from phone to phone. Please refer to your cellphone manual if you are not sure about the placement of the NFC antenna.

The fixture's NFC interface is also available when the fixture is powered off, even if the fixture's internal battery is discharged or missing.

The status LED in the control panel flashes faster when NFC communication is taking place.

We recommend that you always use the latest version of the Martin Companion app.

Control menus

The following commands are available in the fixture's control panel. Note that commands can also be available using RDM, using DMX on the Control/Settings channel, using P3 with a Martin P3 System Controller or using Martin Companion Mobile via NFC.

Default settings are given in **bold print**.

Menus marked with a battery icon below are available when the fixture is not connected to power.

Menu level 1	Menu level 2	Menu level 3	Notes
DMX SETUP			
DMX ADDRESS	**1** - XXX		Set DMX address **(default address = 1)**. The DMX address range is limited so that the fixture will always have enough DMX channels within the 512 available.
CONTROL MODE	**BASIC**		Set DMX control mode
	EXTENDED		
	LUDICROUS		
DMX UNIVERSE	**1** - 63999		Set DMX universe.
WIRELESS	NO MODULE ATTACHED		
	The content of this menu depends on the manufacturer and model of the UCM (Universal Connect Module) that was plugged into the fixture. See that module's documentation for details.		
ETHERNET SETUP			
IP ADDRESS	XXX.XXX.XXX.XXX		Display fixture's static IP address
	PART 1 MSB		Set far left block (most significant byte) of IP address
	PART 2		Set middle left block of IP address
	PART 3		Set middle right block of IP address
	PART 4 LSB		Set far right block (least significant byte) of IP address
SUBNET MASK	XXX.XXX.XXX.XXX		
	EDIT SUBNET MASK	XXX.XXX.XXX.XXX	Display fixture's subnet mask
		XXX.XXX.XXX.XXX	Set subnet mask with 1-bit increments from the left
MAC ADDRESS	XX:XX:XX:XX:XX:XX		Display fixture's MAC address
RESET IP SETUP	RESET	ARE YOU SURE? →YES/NO	Reset static IP address and subnet mask to factory default values – fixture auto-generates its own IP address based on its MAC address
FIXTURE ID			
0 - 9999			User-settable 4-digit fixture ID number **(default = 0)**

PERSONALITY			
PAN/TILT	PAN INVERT	ON/**OFF**	Inverse DMX pan control: right → left
	TILT INVERT	ON/**OFF**	Inverse DMX tilt control: down → up
	FOLLOWSPOT MODE	ON/**OFF**	Enable followspot mode: pan/tilt motors disabled, head can be moved manually
		TOGGLE HOLD	Holds head in current position NB: Only available in shortcut menu!
	LIMIT PAN/TILT	LIMIT ENABLE ON/**OFF**	Enable limits for pan and tilt
		PAN MIN → degrees	Set minimum pan angle limit
		PAN MAX → degrees	Set maximum pan angle limit
		TILT MIN → degrees	Set minimum tilt angle limit
		TILT MAX → degrees	Set maximum tilt angle limit
		RESET PAN / TILT LIMITS	Confirm with: ARE YOU SURE? YES/NO Returns fixture to default pan/tilt limits.
SPEED	PAN/TILT	FAST	Adjust speed of pan and tilt movement
		SMOOTH	
		STANDARD	
	EFFECT	FAST	Adjust speed of effects movement
		SMOOTH	
		STANDARD	
		FOLLOW P/T	Effects speed follows pan/tilt speed setting
DIMMER CURVE	S-CURVE		S-curve (fixture emulates incandescent lamp voltage linear RMS dimming curve)
	INV SQ LAW		Inverse square law dimming curve
	SQUARE LAW		Square law dimming curve
	LINEAR		Optically linear dimming curve
TUNGSTEN EMULATOR	ON		Color temperature and dimming characteristics emulate incandescent tungsten lamp behavior
	OFF		
COLOR MODE	**DIRECT COLOR**		Direct control of CMY flags
	CALIBRATED COLOR		Color mixing optimized for even color rendition across multiple fixtures
	EXTENDED GAMUT		Color mixing optimized for saturation
FOCUS TRACKING	FAR		Focus tracks zoom position
	MEDIUM		
	NEAR		
	DISABLED		
VIDEO TRACKING	ENABLED		Color fading optimized for speed of color changes
	DISABLED		Color fading optimized for smoothness

DMX RESET	**ON**	Fixture can be reset via DMX
	OFF	Fixture cannot be reset via DMX
EFFECT SHORTCUT	**ON**	Effects take shortest route during changes, crossing open positions if necessary
	OFF	Effects avoid open positions during effects changes
COOLING MODE	CONSTANT FAN FULL	Fans optimized for maximum light intensity, fans run at full speed, light intensity reduced if necessary to keep fixture within temperature limits
	CONSTANT FAN MEDIUM	Fans run at medium speed, light intensity reduced if necessary to keep fixture within temperature limits
	CONSTANT FAN LOW	Fans run at low speed, light intensity reduced if necessary to keep fixture within temperature limits
	CONSTANT FAN ULOW	Fans optimized for lowest noise, fans run at ultra-low speed, light intensity reduced if necessary to keep fixture within temperature limits
	REGULATED FANS	Compromise between light intensity and quietness, fan speed temperature-regulated, light intensity only reduced if fans reach full speed and further action necessary to keep fixture within temperature limits
STUDIO MODE	**OFF**	
	STUDIO MODE 1	Limits output intensity by 10% to reduce noise in REGULATED FANS cooling mode
	STUDIO MODE 2	Limits output intensity by 20% to reduce noise in REGULATED FANS cooling mode
GOBO CT CORRECTION	**ENABLED**	Automatic color temperature correction when gobo is inserted into beam
	DISABLED	
KEY LIGHT CALIBRATION	OFF	Key light calibration disabled
	MANUAL	User can manually change CMY values to adjust keylight calibration
	AUTOMATIC	CMY calibration values are automatically calculated

DISPLAY	DISPLAY SLEEP	10 MINUTES	Control panel display goes into sleep mode 10 minutes after last key press
		5 MINUTES	Control panel display goes into sleep mode 5 minutes after last key press
		2 MINUTES	Control panel display goes into sleep mode 2 minutes after last key press
		ON	Control panel permanently on
	DISPLAY INTENSITY	10 ... 100	Set control panel display intensity in % (default = **50%**)
	DISPLAY ROTATION	ROTATE 180	Control panel display inverted
		NORMAL	Control panel display orientation normal
	DISPLAY CONTRAST	3 … 100	Set control panel display contrast (default = **50%**)
ERROR MODE	SILENT		Disable error messages and warnings in display (the status LED will still light to indicate fixture status if an error has been detected or the fixture has a warning)
	NORMAL		Enable error messages and warnings in control panel display
HIBERNATION MODE	ON		Enable Hibernation Mode (light output set to zero, all effect movement disabled)
	OFF		Disable Hibernation Mode
FRAMING MODE	LEGACY		Blade insertion is limited so that max. DMX value for insertion gives 50% insertion. Corners of angled blades also reach max. 50% insertion.
	STANDARD		Framing is controlled with designated primary and secondary blades. Secondary blades must make room for primary blades, with angle as first priority.
STAND-ALONE	OFFLINE MODE	RUN STAND-ALONE SHOW	Stand-Alone mode enabled / disabled
		HOLD LAST LOOK	
	STAND-ALONE MODE	**INDIVIDUAL**	Fixture runs its own stand-alone show and ignores all external stand-alone synchronizing signals.
		SYNC HOST	Fixture sends synchronizing stand-alone signals.
		SYNC CLIENT	Fixture listens for synchronizing stand-alone signals. If it does not receive synchronizing signals, it does not show its stand-alone show.
	RECORD CURRENT LOOK	SURE? Y/N	Stores current look as single-scene stand-alone show.

DEFAULT SETTINGS			
FACTORY DEFAULT	LOAD	ARE YOU SURE? → YES/NO	Return all settings (except calibrations) to factory defaults
CUSTOM 1	LOAD	ARE YOU SURE? → YES/NO	Load Custom Settings 1
	SAVE	ARE YOU SURE? → YES/NO	Save current settings as Custom Settings 1
CUSTOM 2	LOAD	ARE YOU SURE? → YES/NO	Load Custom Settings 2
	SAVE	ARE YOU SURE? → YES/NO	Save current settings as Custom Settings 2
CUSTOM 3	LOAD	ARE YOU SURE? → YES/NO	Load Custom Settings 3
	SAVE	ARE YOU SURE? → YES/NO	Save current settings as Custom Settings 3
INFORMATION			
POWER ON TIME	TOTAL	0 … XXX HR	Display number of hours fixture has been powered on since manufacture (not user-resettable)
	RESETTABLE	0 … XXX HR	Display number of hours fixture has been powered on since last counter reset
		CLEAR COUNTER? → YES/NO	Reset counter
POWER ON CYCLES	TOTAL	0 … XXX HR	Display number of times fixture has been powered on since manufacture (not user-resettable)
	RESETTABLE	0 … XX HR	Display number of times fixture has been powered on since last counter reset
		CLEAR COUNTER? → YES/NO	Reset counter
LED ON TIME	TOTAL	0 … XX HR	Display number of hours LEDs have been powered on since manufacture (not user-resettable)
	RESETTABLE	0 … XX HR	Display number of hours LEDs have been powered on since last counter reset
		CLEAR COUNTER? → YES/NO	Reset counter
SW VERSION	XX.XX.XX		Display currently active firmware (fixture software) version
RDM UID	4D50.XXXXXXXX		Display fixture's unique RDM ID
FAN SPEEDS	HEAD FAN 1 ... BASE FAN 1 …	0 … XXX RPM	Scroll to display current speed of cooling fans

TEMPERATURES (since last fixture reset)	UI…LED BOARD	CURRENT / MIN / MAX X C	Scroll through PCB temperature sensors, then display current, minimum and maximum temperature in °C of PCBs since fixture was last reset / powered on
DMX LIVE			
SOURCE	NO INPUT / DMX / ART-NET / SACN / P3 / UCM		Display current control data source (UCM = Universal Connect Module)
RATE	0 – 44 Hz		DMX transmission speed in packets per second
QUALITY	0 – 100%		Percentage of packets received
START CODE	0 – 255		Value of DMX start code
STROBE … FX SYNC	XXX		Scroll to see values being received on each DMX channel
TEST			
TEST ALL	DIMMER … TILT		Run test sequence of all functions. To test a specific function, use UP/DOWN buttons to scroll through functions. Press ENTER to pause and press again to restart test sequence. Press MENU button to exit test.
TEST LEDS	DIMMER		Run test sequence of LEDs only. Press MENU button to exit test
TEST EFFECTS	GOBO WHEEL…FOCUS		Run test sequence of effects. To test a specific effect, use UP/DOWN buttons to scroll through effects. Press ENTER to pause and press again to restart test sequence. Press MENU button to exit test.
TEST PAN/TILT	PAN		Run test sequence of pan functions. Press MENU button to exit test
	TILT		Run test sequence of tilt functions. Press MENU button to exit test
MANUAL CONTROL			
RESET			Reset fixture
STROBE … FX1, FX1 ADJUST, FX2, FX2 ADJUST, FX SYNC			Scroll through effects, then manually control an effect
SERVICE			
ERROR LIST	Empty or up to 20 errors		Show all error and warning messages stored in memory
FAN CLEAN	**OFF**		Run cooling fans at high speed to help dislodge dust and debris
	ON		

PAN/TILT FEEDBACK	OFF		Enable/disable pan/tilt position feedback system
	ON		
ADJUST **Important!** For use by (or with guidance from) Martin Service only!	P/T AUTOCALIBRATION	PRESS UP → START	Starts pan and tilt autocalibration. **Warning!** Head will move! Allow room for full pan/tilt movement.
	FROST POSITION	LIGHT FROST (FLAG 1) POSITION	**Important!** For use by authorized service technicians during mechanical adjustment only. Do not enter the ADJUST menu without Martin service documentation, or you may make the fixture impossible to use correctly.
		HEAVY FROST (FLAG 2) POSITION	
	FRAMING	FRAMING BLADE 1 LEFT	
		FRAMING BLADE 1 RIGHT	
		…	
		FRAMING BLADE 4 LEFT	
		FRAMING BLADE 4 RIGHT	
CALIBRATION	CYAN...TILT	*Calibration range (varies depending on effect)*	Scroll through effects, press Enter to select. Adjust position and press Enter to confirm.
	LOAD DEFAULTS	LOAD	Load factory default calibration settings
	SAVE DEFAULTS	SAVE	Replace factory default calibration settings with current calibration settings
EXPECTED MODULES **Important!** For use by (or with guidance from) Martin Service only!	MODULE STATUS	PAN ... PIXEL BEAM 1: FOUND/MISSING	Lists internal effect modules that the fixture expects to detect and reports them as either FOUND or MISSING
	UNKNOWN MODULE	NONE AVAILABLE	No modules detected
		XXXX (PAN ... PIXEL BEAM 1)	One module has a red flashing LED on its PCB. Identify which module has the flashing LED, then select the module from the UNKNOWN module list to make it KNOWN.
	DELETE MODULE	PAN ... PIXEL BEAM 1	Caution! This action deletes module type ID. Module will now be detected as UNKNOWN.
	CONSOLIDATE FIXTURE	JOIN NEW UI	In case of SR NO MISMATCH warning, JOIN NEW UI consolidates saved data from the modules to the UI. Apply this command after installing a new UI. *The fixture still works if there is an "SR NO MISMATCH" warning, but the modules do not share calibration/adjustment data with the UI.*
		JOIN NEW MODULES	In case of a "SR NO MISMATCH" warning, JOIN NEW MODULES consolidates saved data from the UI to the modules. Apply this command after installing new modules. *The fixture still works if there is an "SR NO MISMATCH" warning, but the UI*

			does not share calibration/adjustment data with the modules.
OUTDOOR	ACTION	STOP / DRY OUT	Activates fixture's drying out function
	WET STATE	DRY / WET	Displays current rain sensor status
	WET CURRENT	XXX MIN	Displays number of minutes fixture has been wet since last powered on
	WET TOTAL	XXX MIN	Displays total number of minutes fixture has been wet in its lifetime
	ORIENTATION	STANDING / HANGING / CONNECTORS UP / CONNECTORS DOWN / SIDEWAYS 90 CW / SIDEWAYS 90 CCW	Displays current fixture orientation
POWER SUPPLY	DC VOLTAGE	24VDC ENABLE / DISABLE	Display 24 V / 48 V internal DC voltage status (can be useful for service, can indicate a blown internal fuse)
		48VDC ENABLE / DISABLE	
	AC VOLTAGE	CURRENT → 0 – XXX VAC	Display current mains power voltage value
		MIN → 0 – XXX VAC	Display lowest mains power voltage value since fixture powered on
		MAX → 0 – XXX VAC	Display highest mains power voltage value since fixture powered on
	FREQUENCY	XXHZ	Display current mains power AC frequency in Hz
SERVICE LOG	NO DEVICE / EXPORT		No USB device present / Press ENTER to export Service Log data to USB device
	CLEAR	ARE YOU SURE? YES/NO	Clears all saved error data
USB	NO DEVICE		No USB memory device detected at USB port or no firmware detected on USB memory device
	UPDATING FILES		Fixture updating internal memory from USB memory device
	AVAILABLE FIRMWARE	XX.XX.XX ... XX.XX.XX	Select firmware from versions stored in internal memory. Scroll to select version, then press Enter and confirm your choice to update.
FIXTURE TO FIXTURE FW	UPLOAD VIA DMX512	STOP / START / FORCE	Set fixture to upload its firmware to all the other fixtures of the same type on the data link.
	UPLOAD VIA ART-NET	STOP / START / FORCE	
	UPLOAD SPEED	HIGH SPEED / HIGH STABILITY	Select fixture-to-fixture firmware upload speed. High stability takes more time but is more reliable.

DMX protocols

Basic DMX Mode

54 DMX channels

Channel	DMX Value	Function	Fade type	Default value
1	0–19 20–49 50–200 201–210 211–255	**Strobe/shutter** Shutter closed Shutter open Strobe slow → fast Shutter open Random strobe slow → fast	Snap	30
2 **3**	0–65535	**Dimmer** Closed → Open	Fade	0
4 **5**	0–65535	**Cyan** Intensity 0 → 100%	Fade	0
6 **7**	0–65535	**Magenta** Intensity 0 → 100%	Fade	0
8 **9**	0–65535	**Yellow** Intensity 0 → 100%	Fade	0
10 **11**	0–65535	**CTO** Open (5800 K) → Warm (2850 K)	Fade	0
12	0–37 38–113 114 115–255	**CTC (Color Temperature Control)** 2000 K 2000 K → 5750 K Open (5800 K) 5850 K → 12850 K	Fade	114
13	0–126 127–128 129–255	**Green/Magenta shift (tint)** Shift from Magenta / negative Duv to neutral No shift (native / on black body curve) Shift towards Green / positive Duv	Fade	128
14	0 1 2 3 4 5 6–23 24 25–40 41 42–57 58 59–74 75	**Color wheel** ***Stepped selection*** Open Slot 1 (Spectral Enhancement) Slot 2 (CTB) Slot 3 (Deep Orange) Slot 4 (Navy Blue) Slot 5 (Red) *No function* ***Color wheel indexing*** Open Open → Slot 1 Slot 1 Slot 1 → Slot 2 Slot 2 Slot 2 → Slot 3 Slot 3	Snap	0

14 contd.	76–91 92 93–108 109 110–125 126 127 128–137 138–147 148–157 158–167 168–177 178–187 188–191 192–214 215–216 217–239 240 241–255	Slot 3 → Slot 4 Slot 4 Slot 4 → Slot 5 Slot 5 Slot 5 → Open Open *No function* ***Color wheel shake*** Shake around Open 360° → 10° Shake around Slot 1 360° → 10° Shake around Slot 2 360° → 10° Shake around Slot 3 360° → 10° Shake around Slot 4 360° → 10° Shake around Slot 5 360° → 10° *No function* ***Color wheel rotation*** CW rotation fast → slow Stop (wheel stops at current position) CCW rotation slow → fast ***Random color*** Stop (wheel stops at currently selected color) Random color slow → fast		
15	0 1 2 3 4 5 6 7 8–127 128–136 137–145 146–154 155–163 164–172 173–181 182–190 191 192–215 216–239 240 241–255	**Gobo wheel 1 gobo selection** (add indexing or rotation on next channels) ***Stepped selection*** Open Slot 1 (Time Ripples) Slot 2 (Look Sharper) Slot 3 (Compass) Slot 4 (Deep Space) Slot 5 (Radar) Slot 6 (Short Cuts) Slot 7 (A Lot of Spot) *No function* ***Gobo shake*** Shake slot 1 360° → 10° Shake slot 2 360° → 10° Shake slot 3 360° → 10° Shake slot 4 360° → 10° Shake slot 5 360° → 10° Shake slot 6 360° → 10° Shake slot 7 360° → 10° *No function* ***Gobo wheel rotation*** CW rotation fast → slow CCW rotation slow → fast ***Random gobo*** Stop (wheel stops at currently selected gobo) Random gobo slow → fast	Snap	0
16 **17**	0–16383 16384 16385–32767 32768–49150 49151–49152 49153–65535	**Gobo wheel 1 gobo indexing/rotation** ***Gobo indexing*** Indexing -180° → 0° Indexed at 0° Indexing 0° → +180° ***Gobo rotation*** CW gobo rotation fast → slow Stop (gobo stops at current position) CCW gobo rotation slow → fast	Fade	16384

18	0 1 2 3 4 5 6 7 8–127 128–136 137–145 146–154 155–163 164–172 173–181 182–190 191 192–215 216–239 240 241–255	**Gobo wheel 2 gobo selection** (add indexing or rotation on next channels) ***Stepped selection*** Open Slot 1 (String Theory) Slot 2 (Hazey Waves) Slot 3 (Limbo) Slot 4 (Up Is Down) Slot 5 (Brush Up) Slot 6 (Sponge) Slot 7 (All Wrapped Up) *No function* ***Gobo shake*** Shake slot 1 360° → 10° Shake slot 2 360° → 10° Shake slot 3 360° → 10° Shake slot 4 360° → 10° Shake slot 5 360° → 10° Shake slot 6 360° → 10° Shake slot 7 360° → 10° *No function* ***Gobo wheel rotation*** CW rotation fast → slow CCW rotation slow → fast ***Random gobo*** Stop (wheel stops at currently selected gobo) Random gobo slow → fast	Snap	0
19	0–16383 16384	**Gobo wheel 2 gobo indexing/rotation** ***Gobo indexing*** Indexing -180° → 0° Indexed at 0°	Snap	16384
20	16385–32767 32768–49150 49151–49152 49153–65535	Indexing 0° → +180° ***Gobo rotation*** CW rotation fast → slow Stop (gobo stops at current position) CCW rotation slow → fast		
21	0 1 2 3 4–23 24 25–74 75 76–126 127 128–148 149–169 170–190 191	**Animation wheel insertion** (add indexing or rotation on next channels) ***Stepped insertion*** Open Horizontal pattern Diagonal pattern Vertical pattern *No function* ***Continuous insertion*** Open Wheel insertion Horizontal pattern Diagonal patterns Vertical pattern ***Wheel shake*** Horizontal pattern shake slow → fast Diagonal pattern shake slow → fast Vertical pattern shake slow → fast *No function*	Snap	0

21 contd.	192 193–239 240 241–255	***Bounce*** Stop (wheel stops at current position) Bounce between horizontal and vertical slow → fast ***Random pattern*** Stop (wheel stops at current pattern) Random patterns between horizontal and vertical slow → fast		
22	0–16383 16384 16385–32767	**Animation wheel indexing/rotation** ***Animation wheel indexing*** Indexing -180° → 0° Indexed at 0° Indexing 0° → +180°	Fade	16384
23	32768–49150 49151–49152 49153–65535	***Animation wheel rotation*** CW rotation fast → slow Stop (wheel stops at current position) CCW rotation slow → fast		
24	0–255	**Light Frost (Frost 1)** No frost → full frost	Fade	0
25	0–255	**Heavy Frost (Frost 2)** No frost → full frost	Fade	0
26	0 1 2–127 128–191 192–255	**Prism selection** (select indexed angle or rotation on next channels) ***Stepped selection*** Open Prism 1 *No function* ***Prism shake*** Shake prism slow → fast *No function*	Snap	0
27	0–16383 16384 16385–32767	**Prism indexing/rotation** ***Prism indexing*** Indexing -180° → 0° Prism indexed at 0° Indexing 0° → +180°	Fade	16384
28	32768–49150 49151–49152 49153–65535	***Prism rotation*** CW rotation fast → slow Stop (prism stops at current position) CCW rotation slow → fast		
29	0–191 192 193–223 224 225–255	**Iris** ***Iris opening*** Open → closed ***Opening pulse*** Stop (iris stops at current position) Opening pulse slow → fast ***Closing pulse*** Stop (iris stops at current position) Closing pulse slow → fast	Fade	0
30 **31**	0–65535	**Zoom** Wide → narrow	Fade	32768
32 **33**	0–65535	**Focus** Infinity → near	Fade	32768

34	0–255	**Framing blade 1 position** Out → in	Fade	0
35	0–126 127–128 129–255	**Framing blade 1 angle** Minimum Parallel Maximum	Fade	128
36	0–255	**Framing blade 2 position** Out → in	Fade	0
37	0–126 127–128 129–255	**Framing blade 2 angle** Minimum Parallel Maximum	Fade	128
38	0–255	**Framing blade 3 position** Out → in	Fade	0
39	0–126 127–128 129–255	**Framing blade 3 angle** Minimum Parallel Maximum	Fade	128
40	0–255	**Framing blade 4 position** Out → in	Fade	0
41	0–126 127–128 129–255	**Framing blade 4 angle** Minimum Parallel Maximum	Fade	128
42	0–126 127–128 129–255	**Framing rotation** Minimum Parallel Maximum	Fade	128
43 **44**	0–65535	**Pan** Left → right	Fade	32768
45 **46**	0–65535	**Tilt** Forward → backward	Fade	32768
47	***Fixture Control/Settings – see 'Control/Settings DMX channel' on page 62***			
48	0 1–127 128 129–254 255	**LED Frequency** Hybrid dimming Variable -2% → 0% 2400 Hz Variable 0% → +2% *No function*	Snap	128

49	0–26 27–228 229–255	**P3 Mix** ***DMX Mode*** Intensity and colors fully controlled by DMX, P3 pixel data ignored ***Mixed Mode*** Crossfade from DMX control of intensity and colors to P3 control of intensity and colors: • At 27, intensity and colors are still fully controlled by DMX. • Between 27 and 228, you mix/crossfade from DMX to P3 control. • At 228, the intensity of each of the 6 x *Animotion* segments is controlled by 6 x separate P3 pixels and color is controlled using the average color of the six P3 pixels. ***Video Mode*** Intensity of 6 x *Animotion* segments controlled by 6 x P3 pixels, color controlled by DMX (DMX channels 'color' the P3 pixel data)	Snap	0
50	0–255	**FX 1 Select** FX Selection 1 -255	Snap	0
51	0–126 127–128 129–255	**FX 1 Adjust** Backwards fast → slow Stop Forwards slow → fast	Fade	128
52	0–255	**FX 2 Select** FX Selection 1 -255	Snap	0
53	0–126 127–128 129–255	**FX 2 Adjust** Backwards fast → slow Stop Forwards slow → fast	Fade	128
54	0 1–35 36 37–100 101–120 121–140 141–255	**FX Synchronization** No sync Fixture offset (shift 10° → 350°) Synchronized *No function* Random start (FX1 adjust channel controls overall speed) Random duration *No function*	Snap	36

Extended DMX Mode

64 DMX channels

Channel	DMX Value	Function	Fade type	Default value
1	0–19 20–49 50–200 201–210 211–255	**Strobe/shutter** Shutter closed Shutter open Strobe slow → fast Shutter open Random strobe slow → fast	Snap	30
2 **3**	0–65535	**Dimmer** Closed → Open	Fade	0
4 **5**	0–65535	**Cyan** Intensity 0 → 100%	Fade	0
6 **7**	0–65535	**Magenta** Intensity 0 → 100%	Fade	0
8 **9**	0–65535	**Yellow** Intensity 0 → 100%	Fade	0
10 **11**	0–65535	**CTO** Open (5800 K) → Warm (2850 K)	Fade	0
12	0–37 38–113 114 115–255	**CTC (Color Temperature Control)** 2000 K 2000 K → 5750 K Open (5800 K) 5850 K → 12850 K	Fade	114
13	0–126 127–128 129–255	**Green/Magenta shift (tint)** Shift from Magenta / negative Duv to no shift No shift (native / on black body curve) Shift towards Green / positive Duv	Fade	128
14	0 1 2 3 4 5 6–23 24 25–40 41 42–57 58 59–74 75 76–91 92 93–108	**Color wheel** ***Stepped selection*** Open Slot 1 (Spectral Enhancement) Slot 2 (CTB) Slot 3 (Deep Orange) Slot 4 (Navy Blue) Slot 5 (Red) *No function* ***Color wheel indexing*** Open Open → Slot 1 Slot 1 Slot 1 → Slot 2 Slot 2 Slot 2 → Slot 3 Slot 3 Slot 3 → Slot 4 Slot 4 Slot 4 → Slot 5	Snap	0

14 contd.	109 110–125 126 127 128–137 138–147 148–157 158–167 168–177 178–187 188–191 192–214 215–216 217–239 240 241–255	Slot 5 Slot 5 → Open Open *No function* ***Color wheel shake*** Shake around Open 360° → 10° Shake around Slot 1 360° → 10° Shake around Slot 2 360° → 10° Shake around Slot 3 360° → 10° Shake around Slot 4 360° → 10° Shake around Slot 5 360° → 10° *No function* ***Color wheel rotation*** CW rotation fast → slow Stop (wheel stops at current position) CCW rotation slow → fast ***Random color*** Stop (wheel stops at currently selected color) Random color slow → fast		
15	0 1 2 3 4 5 6 7 8–127 128–136 137–145 146–154 155–163 164–172 173–181 182–190 191 192–215 216–239 240 241–255	**Gobo wheel 1 gobo selection** (add indexing or rotation on next channels) ***Stepped selection*** Open Gobo 1 (Time Ripples) Gobo 2 (Look Sharper) Gobo 3 (Compass) Gobo 4 (Deep Space) Gobo 5 (Radar) Gobo 6 (Short Cuts) Gobo 7 (A Lot of Spot) *No function* ***Gobo shake*** Shake Gobo 1, 360° → 10° Shake Gobo 2, 360° → 10° Shake Gobo 3, 360° → 10° Shake Gobo 4, 360° → 10° Shake Gobo 5, 360° → 10° Shake Gobo 6, 360° → 10° Shake Gobo 7, 360° → 10° *No function* ***Gobo wheel rotation*** CW rotation fast → slow CCW rotation slow → fast ***Random gobo*** Stop (wheel stops at currently selected gobo) Random gobo slow → fast	Snap	0
16 **17**	0–16383 16384 16385–32767 32768–49150 49151–49152 49153–65535	**Gobo wheel 1 gobo indexing/rotation** ***Gobo indexing*** Indexing -180° → 0° Indexed at 0° Indexing 0° → +180° ***Gobo rotation*** CW gobo rotation fast → slow Stop (gobo stops at current position) CCW gobo rotation slow → fast	Fade	16384

18	0 1 2 3 4 5 6 7 8–127 128–136 137–145 146–154 155–163 164–172 173–181 182–190 191 192–215 216–239 240 241–255	**Gobo wheel 2 gobo selection** (add indexing or rotation on next channels) ***Stepped selection*** Open Gobo 1 (String Theory) Gobo 2 (Hazey Waves) Gobo 3 (Limbo) Gobo 4 (Up Is Down) Gobo 5 (Brush Up) Gobo 6 (Sponge) Gobo 7 (All Wrapped Up) *No function* ***Gobo shake*** Shake Gobo 1, 360° → 10° Shake Gobo 2, 360° → 10° Shake Gobo 3, 360° → 10° Shake Gobo 4, 360° → 10° Shake Gobo 5, 360° → 10° Shake Gobo 6, 360° → 10° Shake Gobo 7, 360° → 10° *No function* ***Gobo wheel rotation*** CW rotation fast → slow CCW rotation slow → fast ***Random gobo*** Stop (wheel stops at currently selected gobo) Random gobo slow → fast	Snap	0
19 **20**	0–16383 16384 16385–32767 32768–49150 49151–49152 49153–65535	**Gobo wheel 2 gobo indexing/rotation** ***Gobo indexing*** Indexing -180° → 0° Indexed at 0° Indexing 0° → +180° ***Gobo rotation*** CW rotation fast → slow Stop (gobo stops at current position) CCW rotation slow → fast	Snap	16384
21	0 1 2 3 4–23 24 25–74 75 76–126 127 128–148 149–169 170–190 191	**Animation wheel insertion** (add indexing or rotation on next channels) ***Stepped insertion*** Open Horizontal pattern Diagonal pattern Vertical pattern *No function* ***Continuous insertion*** Open Wheel insertion Horizontal pattern Diagonal patterns Vertical pattern ***Wheel shake*** Horizontal pattern shake slow → fast Diagonal pattern shake slow → fast Vertical pattern shake slow → fast *No function*	Snap	0

21 contd.	192 193–239 240 241–255	***Bounce*** Stop (wheel stops at current position) Bounce between horizontal and vertical slow → fast ***Random pattern*** Stop (wheel stops at current pattern) Random patterns between horizontal and vertical slow → fast		
22	0–16383 16384 16385–32767	**Animation wheel indexing/rotation** ***Animation wheel indexing*** Wheel indexing -180° → 0° Wheel indexed at 0° Wheel indexing 0° → +180°	Fade	16384
23	32768–49150 49151–49152 49153–65535	***Animation wheel rotation*** CW rotation fast → slow Stop (wheel stops at current position) CCW rotation slow → fast		
24	0–255	**Light Frost (Frost 1)** No frost → full frost	Fade	0
25	0–255	**Heavy Frost (Frost 2)** No frost → full frost	Fade	0
26	0 1 2–127 128–191 192–255	**Prism selection** (select indexed angle or rotation on next channels) ***Stepped selection*** Open Prism 1 *No function* ***Prism shake*** Shake prism slow → fast *No function*	Snap	0
27	0–16383 16384 16385–32767	**Prism indexing/rotation** ***Prism indexing*** Prism indexing -180° → 0° Prism indexed at 0° Prism indexing 0° → +180°	Fade	16384
28	32768–49150 49151–49152 49153–65535	***Prism rotation*** CW rotation fast → slow Stop (prism stops at current position) CCW rotation slow → fast		
29	0–49151	**Iris** ***Iris opening*** Open → closed	Fade	0
30	49152 49153–57343 57344 57345–65535	***Opening pulse*** Stop (iris stops at current position) Opening pulse slow → fast ***Closing pulse*** Stop (iris stops at current position) Closing pulse slow → fast		
31	0–65535	**Zoom** Wide → narrow	Fade	32768
32				
33	0–65535	**Focus** Infinity → Near	Fade	32768
34				

35 **36**	0–65535	**Framing blade 1 position** Out → in	Fade	0
37 **38**	0–32766 32767–32768 32769–65535	**Framing blade 1 angle** Minimum Parallel Maximum	Fade	32768
39 **40**	0–65535	**Framing blade 2 position** Out → in	Fade	0
41 **42**	0–32766 32767–32768 32769–65535	**Framing blade 2 angle** Minimum Parallel Maximum	Fade	32768
43 **44**	0–65535	**Framing blade 3 position** Out → in	Fade	0
45 **46**	0–32766 32767–32768 32769–65535	**Framing blade 3 angle** Minimum Parallel Maximum	Fade	32768
47 **48**	0–65535	**Framing blade 4 position** Out → in	Fade	0
49 **50**	0–32766 32767–32768 32769–65535	**Framing blade 4 angle** Minimum Parallel Maximum	Fade	32768
51 **52**	0–32766 32767–32768 32769–65535	**Framing rotation** Minimum Parallel Maximum	Fade	32768
53 **54**	0–65535	**Pan** Left → right	Fade	32768
55 **56**	0–65535	**Tilt** Forward → backward	Fade	32768
57	***Fixture Control/Settings – see 'Control/Settings DMX channel' on page 62***			
58	0 1–127 128 129–254 255	**LED Frequency** Hybrid dimming Variable -2% → 0% 2400 Hz Variable 0% → +2% *No function*	Snap	128

59	0–26 27–228 229–255	**P3 Mix** ***DMX Mode*** Intensity and colors fully controlled by DMX, P3 pixel data ignored ***Mixed Mode*** Crossfade from DMX control of intensity and colors to P3 control of intensity and colors: • At 27, intensity and colors are still fully controlled by DMX. • Between 27 and 228, you mix/crossfade from DMX to P3 control. • At 228, the intensity of each of the 6 x *Animotion* segments is controlled by 6 x separate P3 pixels and color is controlled using the average color of the six P3 pixels. ***Video Mode*** Intensity of 6 x *Animotion* segments controlled by 6 x P3 pixels, color controlled by DMX (DMX channels 'color' the P3 pixel data)	Snap	0
60	0–255	**FX 1 Select** FX Selection 1 -255	Snap	0
61	0–126 127–128 129–255	**FX 1 Adjust** Backwards fast → slow Stop Forwards slow → fast	Fade	128
62	0–255	**FX 2 Select** FX Selection 1 -255	Snap	0
63	0–126 127–128 129–255	**FX 2 Adjust** Backwards fast → slow Stop Forwards slow → fast	Fade	128
64	0 1–35 36 37–100 101–120 121–140 141–255	**FX Synchronization** No sync Fixture offset (shift 10° → 350°) Synchronized *No function* Random start (FX1 adjust channel controls overall speed) Random duration *No function*	Snap	36

Ludicrous DMX Mode

70 DMX channels

Channel	DMX Value	Function	Fade type	Default value
Channels 1 – 64 as in Extended Mode				
65	*0–255*	*Intensity LED Segment 1* *0 → 100%*	*Fade*	*255*
66	*0–255*	*Intensity LED Segment 2* *0 → 100%*	*Fade*	*255*
67	*0–255*	*Intensity LED Segment 3* *0 → 100%*	*Fade*	*255*
68	*0–255*	*Intensity LED Segment 4* *0 → 100%*	*Fade*	*255*
69	*0–255*	*Intensity LED Segment 5* *0 → 100%*	*Fade*	*255*
70	*0–255*	*Intensity LED Segment 6* *0 → 100%*	*Fade*	*255*

Segment numbering

Ludicrous DMX mode gives individual control of the six LED segments that make up the light engine. The segments are numbered as shown below (fixture hanging downwards, display and connectors at back of fixture, pan at 50%, fixture tilted forward).

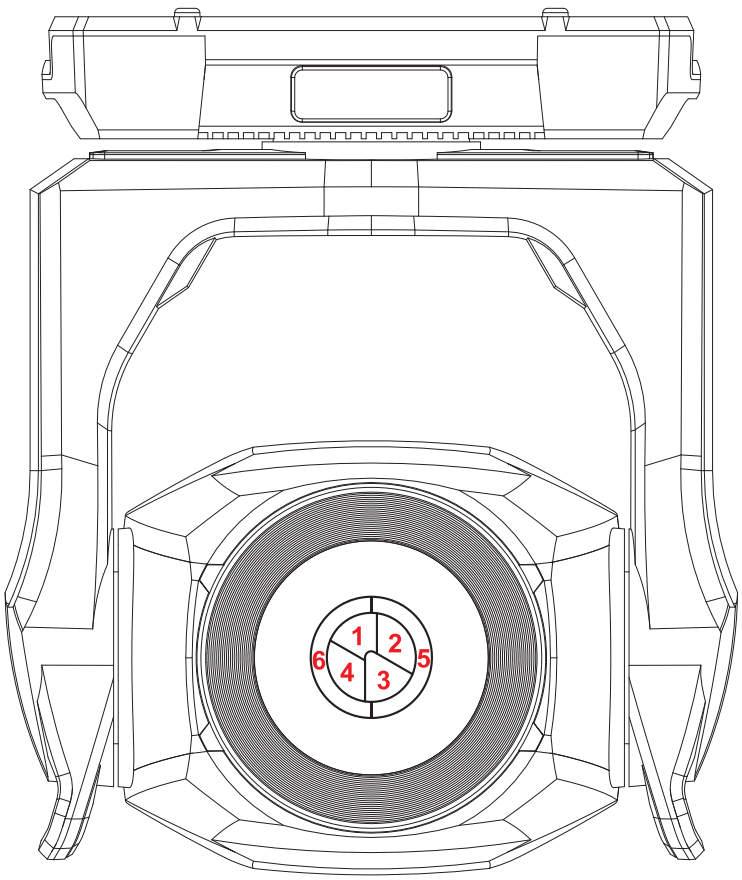

Control/Settings DMX channel

The table below lists the control/settings functions available via DMX on the following channels:

- In Basic DMX Mode: on channel 47
- In Extended and Ludicrous DMX Modes: on channel 57.

The commands on the Control/Settings channel must be held for a certain number of seconds in order to implement them. The required number of seconds is indicated after each command.

Channel	DMX value	Function	Fade type	Default value
Channel depends on DMX mode	0–9	*No function*	Snap	0
	10–14	Reset fixture (5 sec.)		
	15	*No function*		
	16	Reset color (5 sec.)		
	17	Reset beam (5 sec.)		
	18	Reset pan and tilt (5 sec.)		
	19–22	*No function*		
	23	Linear dimmer curve (1 sec.)		
	24	Square law dimmer curve (default, 1 sec.)		
	25	Inverse square law dimmer curve (1 sec.)		
	26	S-Curve dimmer curve (1 sec.)		
	27	Pan and tilt speed = Standard (default, 1 sec.)		
	28	Pan and tilt speed = Fast (1 sec.)		
	29	Pan and tilt speed = Smooth (1 sec.)		
	30	Effect shortcuts = ON (default, 1 sec.)		
	31	Effect shortcuts = OFF (1 sec.)		
	32	Disable focus tracking (1 sec.)		
	33	Enable focus tracking at near distance (1 sec.)		
	34	Enable focus tracking at medium distance (default, 1 sec.)		
	35	Enable focus tracking at far distance (1 sec.)		
	36	Enable video tracking (1 sec.)		
	37	Disable video tracking (default, 1 sec.)		
	38	Extended gamut mode (1 sec.)		
	39	Calibrated color mode (1 sec.)		
	40	Direct color mode (default, 1 sec.)		
	41–51	*No function*		
	52	Control panel display = ON (default, 1 sec.)		
	53	Control panel display = OFF		
	54	Regulated fan speed, fixed light output intensity (default, 1 sec.)		
	55	Full fan speed, regulated light output intensity (1 sec.)		
	56	Medium fan speed, regulated light output intensity (1 sec.)		
	57	Low fan speed, regulated light output intensity (1 sec.)		
	58	Ultra-low fan speed, regulated light output intensity (1 sec.)		
	59–60	*No function*		
	61	Hibernation = ON (1 sec.)		
	62	Hibernation = OFF (default, 1 sec.)		

	63	Followspot = ON (1 sec.)		
	64	Followspot = OFF (default, 1 sec.)		
	65	Pan tilt limit = ON (1 sec.)		
	66	Pan tilt limit = OFF (default, 1 sec.)		
	67	Store lower pan limit (1 sec.)		
	68	Store upper pan limit (1 sec.)		
	69	Store lower tilt limit (1 sec.)		
	70	Store upper tilt limit (1 sec.)		
	71	Reset pan tilt limits (1 sec.)		
	72	Tungsten emulation = ON (1 sec.)		
	73	Tungsten emulation = OFF (default, 1 sec.)		
	74	Stand-alone: Record current look (5 sec.)		
	75	Offline mode = Run stand-alone show (5 sec.)		
	76	Offline mode = Hold last look (default, 5 sec.)		
	77–78	*No function*		
	79	Enable gobo CT correction (default, 1 sec.)		
	80	Disable gobo CT correction (1 sec.)		
	81–83	*No function*		
	84	Studio mode 2 (1 sec.)		
	85	Studio mode 1 (1 sec.)		
	86	Studio mode = OFF (default, 1 sec.)		
	87	Disable keylight calibration (1 sec.)		
	88	Keylight calibration manual (1 sec.)		
	89	Keylight calibration automatic (default, 1 sec.)		
	90–93	*No function*		
	94	Standard framing mode		
	95	Legacy framing mode		
	96–99	*No function*		
	100	Enable calibration (5 sec.)		
	101	Store pan and tilt calibration (5 sec.)		
	102	*No function*		
	103	Store Cyan calibration (5 sec.)		
	104	Store Magenta calibration (5 sec.)		
	105	Store Yellow calibration (5 sec.)		
	106	Store CTC calibration (5 sec.)		
	107	Store all CMYC calibration (5 sec.)		
	108	Store Rotating Gobo 1 / Current slot index calibration (5 sec.)		
	109	Store Rotating Gobo 2 / Current slot index calibration (5 sec.)		
	110	*No function*		
	111	Store beam effect/framing calibration (5 sec.)		
	112	Store iris calibration (5 sec.)		
	113	Store focus calibration (5 sec.)		
	114	Store zoom calibration (5 sec.)		
	115	Store color wheel calibration (5 sec.)		
	116–191	*No function*		
	192	Start CTB filter keylight calibration (5 sec.)		
	193	Store CTB filter keylight calibration (5 sec.)		
	194	Start CTO flag keylight calibration (5 sec.)		
	195	Start Spectral Enhancement filter keylight calibration (5 sec.)		
	196	Store CTO flag keylight calibration (5 sec.)		

	197	Store Spectral Enhancement filter keylight calibration (5 sec.)		
	198	Store all calibration values except keylight calibration (5 sec.)		
	199	Reset all calibration values to factory default (excluding keylight calibration, 5 sec.)		
	200–210	*No function*		
	210	Outdoor: Stop actions and return to normal operation		
	211	*No function*		
	212	Outdoor: Run drying off procedure (1 sec., stops when sequence is complete, or stop by sending value 210)		
	213	Outdoor: Head goes immediately to safe parking position (1 sec., return to normal operation by sending value 210)		
	214–255	*No function*		

FX

The table on the following pages lists the pre-programmed dynamic FX (effect macros) available in the MAC Viper XIP. To control the FX you can:

- Select an effect, or two effects that can run simultaneously, on DMX channels 50 and 52 (Basic Mode) or 60 and 62 (Extended and Ludicrous Modes) by sending the values listed in the table.
- Adjust effect speed on channels 51 and 53 (Basic Mode) or 61 and 63 (Extended and Ludicrous Modes).
- Adjust synchronization of effects across different fixtures on channel 54 (Basic Mode) or 64 (Extended and Ludicrous Modes).

Effects types

Intensity FX (1-15)

These effects modulate the intensity of the output while keeping the color(s) set on the CMY and color wheel channels and any other effects applied.

Animotion effects (32-46)

The MAC Viper XIP's Animotion effects modulate the individual segments of the fixture's LED array individually, giving unique animated effects.

Color FX (64-91)

These effects override the color(s) set on the CMY and color wheel channels.

Beam shaping FX (96-110)

These effects use the fixture's iris, zoom and prism to dynamically change the shape of the beam.

Gobo and Animation FX (128-143)

These effects apply dynamic movement to gobos. Certain effects add zoom to the movement.

Gobo 1 FX are applied to the gobo that is currently selected on gobo wheel 1 and Gobo 2 FX are applied to the gobo that is currently selected on gobo wheel 2.

Framing FX (160-194)

These effects use the fixture's framing system to give static and dynamic beam shapes.

FX 160 (FX2 y-axis selection) is available on the FX2 Selection channel 52 in Basic Mode / 62 in Extended and Ludicrous Modes only. Selecting FX 160 on channel 52 / 62 changes the function of channel 53 / 63. If you select FX 160 on channel 52 / 62, channel 53 / 63 now lets you adjust the y-axis of any FX from 161 - 194 that you select on the FX1 Selection channel 50 / 60.

FX 161 - 194 are available on the FX1 Selection channel 50 (Basic Mode) / 60 (Extended and Ludicrous Modes) only.

Pan and tilt FX (224-235)

These effects use pan and tilt to move the beam following pre-programmed shapes.

FX table

DMX Value	Effect
0	No FX
Intensity FX	
1	Strobe Pulse Width (when Strobe is activated on Channel 1)
2	Wave (sine wave)
3	Step (50/50 on/off)
4	Pulse
5	Blackout Strobe
6	2x Strobe
7	3x Strobe
8	4x Strobe
9	Up, Down, Flash
10	Up, Flash, Down, Flash
11	Random Levels
12	Electric Arc
13	Atomic Lighting
14	Thunderstorm
15	Welding
16–31	No function
Animotion FX	
32	Stop Motion
33	Movie Flicker
34	Random Dimmers
35	Shakey Dimmers
36	Negative Pulse
37	Positive Pulse
38	Radar Wave
39	Radar Step
40	Radar Pulse
41	Odd/Even Wave
42	Odd/Even Step
43	Odd/Even Pulse
44	5-Step Wave
45	5-Step Step
46	5-Step Pulse
47–63	*No function*
Color FX	
64	Rainbow Wave
65	Rainbow Step
66	Rainbow Pulse
67	RGB Wave
68	RGB Step
69	RGB Pulse
70	CMY Wave
71	CMY Step
72	CMY Pulse
73	Mix to White Wave
74	Mix to White Step
75	Mix to White Pulse
76	Random Mix Wave
77	Random Mix Step
78	Random Mix Pulse
79	Random Subtle Wave

DMX Value	Effect
80	Red-White-Blue Fade
81	Red-White-Blue Snaps
82	Full Bumps
83	All Bumps
84	Split Bumps
85	Random Split Bumps
86	Color Shaker
87	Fire
88	Water
89	Ice
90	Hot and Cold
91	Warm and Fuzzy
92–95	*No function*
Beam Shaping FX	
96	Iris Wave (sine wave)
97	Iris Step (50/50 on/off)
98	Iris Pulse
99	Zoom Wave (sine wave, keeps current speed mode)
100	Zoom Step (50/50 on/off, keeps current speed mode)
101	Zoom Pulse (keeps current speed mode)
102	Random Size Wave
103	Random Size Step
104	Random Size Pulse
105	Prism Quarter Tick Tock
106	Prism Half Tick Tock
107	Prism Full Tick Tock
108	Beam Splash
109	Beam Splash Invert
110	Pin to Flood (keeps current speed mode)
111–127	*No function*
Gobo and Animation FX	
128	Gobo 1 Tick Tick Tick
129	Gobo 1 Quarter Tick Tock
130	Gobo 1 Half Tick Tock
131	Gobo 1 Full Tick Tock
132	Gobo 1 Fade Spin Zoom
133	Gobo 1 Twist
134	Gobo 1 Expand Twist
135	Gobo 1 Collapse Twist
136	Gobo 2 Tick Tick Tick
137	Gobo 2 Quarter Tick Tock
138	Gobo 2 Half Tick Tock
139	Gobo 2 Full Tick Tock
140	Gobo 2 Fade Spin Zoom
141	Gobo 2 Twist
142	Gobo 2 Expand Twist
143	Gobo 2 Collapse Twist
144-159	*No function*

DMX Value	Effect
Framing FX	
	↓ *Available on FX2 Select channel only* ↓
160	When selected on channel 46, FX160 enables y-axis selection on channel 47 for FX 167-194 if one of these is selected on channel 44.
	↓ *Available on FX1 Select channel only* ↓
161	Vertical Bar Slim
162	Vertical Bar Medium
163	Vertical Bar Large
164	Horizontal Bar Slim
165	Horizontal Bar Medium
166	Horizontal Bar Large
167	Small Square
168	Medium Square
169	Large Square
170	Small Horizontal Rectangle
171	Medium Horizontal Rectangle
172	Large Horizontal Rectangle
173	Small Vertical Rectangle
174	Medium Vertical Rectangle
175	Large Vertical Rectangle
176	Small Parallelogram Left
177	Medium Parallelogram Left
178	Small Parallelogram Right
179	Medium Parallelogram Right
180	Vertical Bar Slim to Horizontal Bar Slim
181	Vertical Bar Medium to Horizontal Bar Medium
182	Vertical Bar Large to Horizontal Bar Large
183	Vertical Bar Slim to Medium Square
184	Vertical Bar Medium to Medium Square
185	Horizontal Bar Slim to Medium Square
186	Horizontal Bar Medium to Medium Square
187	Medium Square to Medium Horizontal Rectangle
188	Medium Square to Medium Vertical Rectangle
189	Medium Square to Large Horizontal Rectangle
190	Medium Square to Large Vertical Rectangle
191	Small Square to Small Parallelogram Left
192	Medium Square to Medium Parallelogram Left
193	Small Square to Small Parallelogram Right
194	Medium Square to Medium Parallelogram Right
195-223	*No function*

DMX Value	Effect
Pan/Tilt FX	
224	Pan and Tilt Circle Small
225	Pan and Tilt Circle Medium
226	Pan and Tilt Circle Large
227	Pan and Tilt Figure 8 Small
228	Pan and Tilt Figure 8 Medium
229	Pan and Tilt Figure 8 Large
230	Pan and Tilt Diagonal Line Small
231	Pan and Tilt Diagonal Line Medium
232	Pan and Tilt Diagonal Line Large
233	Pan and Tilt Square Small
234	Pan and Tilt Square Medium
235	Pan and Tilt Square Large
236-255	*No function*

Pan/tilt and zoom orientation guide

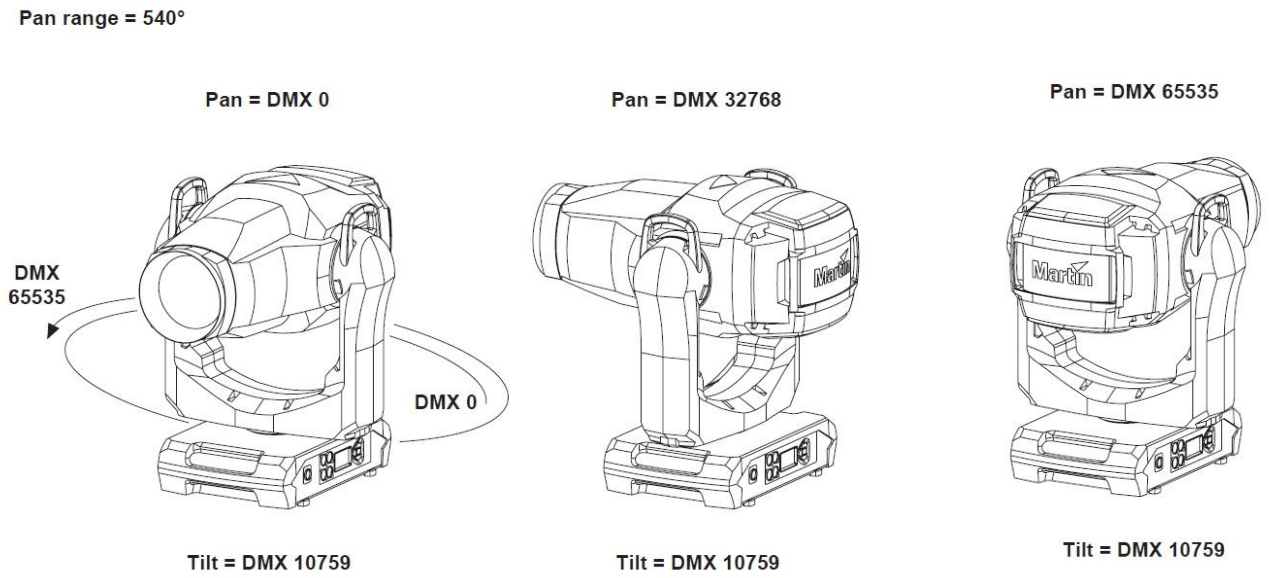

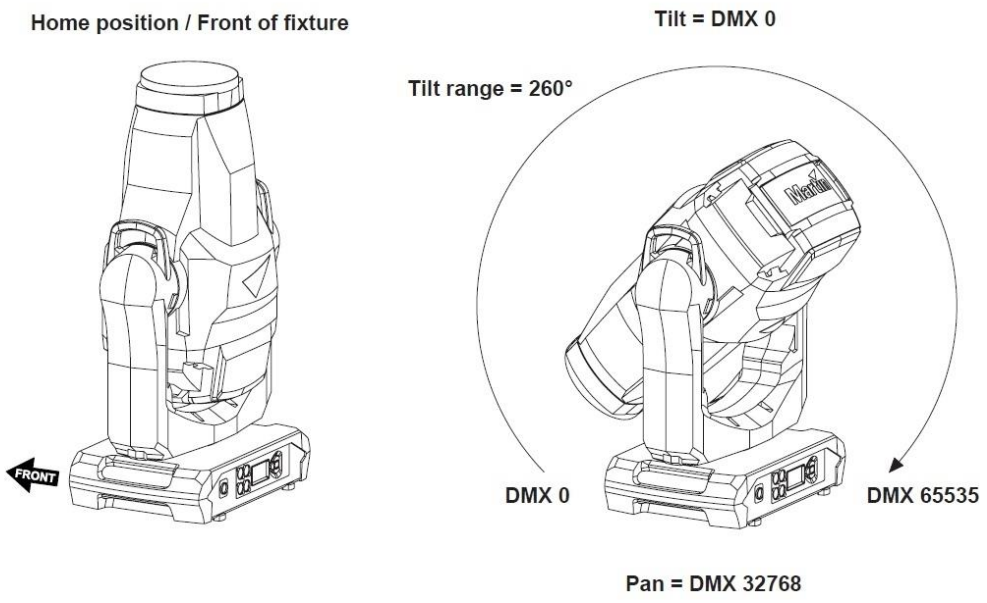

Fixture shown in illustrations is for example purposes only

Tilt = DMX 32768

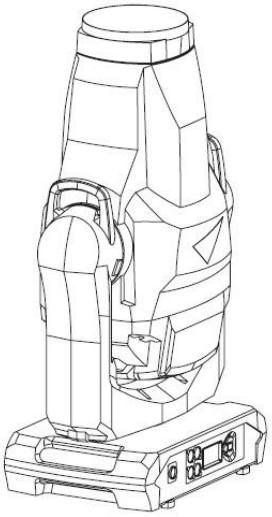

Pan = DMX 32768

Tilt = DMX 65535

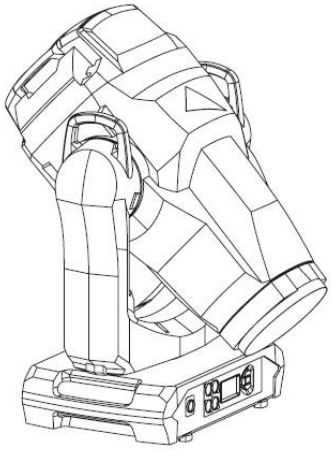

Pan = DMX 32768

Zoom Wide = DMX 0

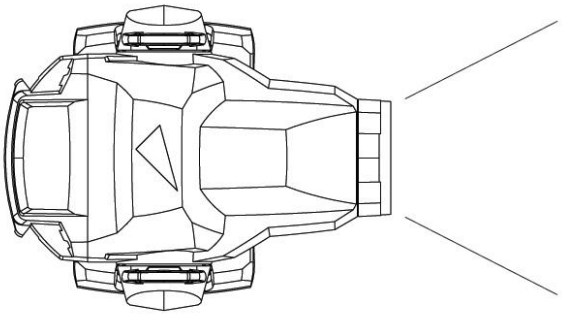

Zoom Narrow = DMX 65535

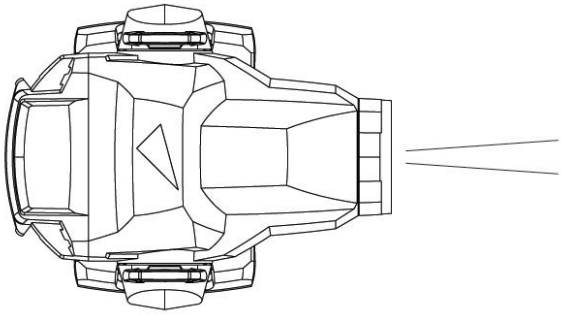

Fixture shown in illustrations is for example purposes only

Service messages

The MAC Viper XIP gives service and maintenance information by displaying a large 3- or 4-character short code and a smaller full-text message in the fixture's display. The short code is visible at a distance, allowing easier reading with the fixture still in the rig, for example, while the full-text message gives more detailed information.

Excessively high temperatures

If any of the temperature sensors reports that the fixture has exceeded its recommended temperature range, the fixture reports a temperature warning and reduces light output to reduce its temperature. If the temperature reaches a dangerous level, light output is shut down completely.

Temperature warnings are canceled and full light output becomes available again as soon as the temperature returns to normal.

Warning messages

Warning messages indicate that either:

- problems might appear in the future if no action is taken, or
- the user needs to pay special attention to a function or procedure when working with the fixture.

The fixture communicates warnings as follows:

- Warning codes are shown continuously in the display and disappear when the user reacts to the warning.
- If more than one warning is detected, all warnings are displayed in sequence.
- If the display is inactive, the fixture's status LED flashes amber to indicate that there is a warning. Activating the display will show the warning.

The possible warning messages are listed below:

Short code	Long message and explanation
BANK	BANK NO ACCESS Error unpacking firmware bank during/after software upload. Fixture will continue to operate on existing firmware. Warning message is cleared by a successful software upload or at the next power off/on cycle.
BATM	BATTERY MODE Fixture in battery mode. Certain control menu items are not available.
BETW	BEAM TMP HIGH LED beam pixels sensor detects abnormally high operating temperature.*
CMTW	CMY TEMP HIGH CMY module sensor detects abnormally high operating temperature.*
CTUP	CONNECTORS UPWARD Fixture oriented with connections panel facing upwards.
DRYO	DRYING Drying out function active.
DRYR	DRY OUT FUNC RECOM Drying out function recommended.
EFTW	EFF TEMP HIGH Effects module sensor detects abnormally high operating temperature.*
F2TW	FRAMING2 TMP HIGH Framing module sensor 2 detects abnormally high operating temperature.*

FRTW	FRAMING TMP HIGH Framing module sensor 1 detects abnormally high operating temperature.*
FTNA	FROST ADJUST Frost effect out of adjustment range.
G11M	GOBO 1-1 MISSING Gobo Wheel 1: Gobo 1 not detected.
G12M … G17M	GOBO 1-2 … GOBO 1-7 MISSING Gobo Wheel 1: Gobo 1 … 7 not detected.
G21M	GOBO 2-1 MISSING Gobo Wheel 2: Gobo 1 not detected.
G22M … G27M	GOBO 2-2 … GOBO 2-7 MISSING Gobo Wheel 2: Gobo 1 … Gobo 7 not detected.
LDTW	LED DRV TMP HIGH LED Driver PCB sensor detects abnormally high operating temperature.*
LETW	LED BOARD TEMP HIGH LED PCB sensor detects abnormally high operating temperature.*
NFCW	NFC WARNING NFC system unable to access data.
PARK	SAFE PARKING Fixture is in Safe Parking mode.
PNTW	PAN TEMP HIGH Pan motor sensor detects abnormally high operating temperature.*
PUTW	PSU TEMP HIGH PSU sensor detects abnormally high operating temperature.*
SERV	SERVICE MODE Fixture in service mode.
TLTW	TILT TEMP HIGH Tilt motor sensor detects abnormally high operating temperature.*
UITW	UI TEMP HIGH User interface (LCD display and control panel) PCB sensor detects abnormally high operating temperature.*
ZFTW	ZF TEMP HIGH Zoom/focus PCB sensor detects abnormally high operating temperature.*

*High temperature warnings are canceled as soon as temperature returns to normal. If temperature reaches cutoff level, the warning is replaced by a cutoff error message.

Error messages

Error messages indicate that a problem is present. The fixture communicates errors as follows:

- Error messages flash in the display.
- If more than one error is detected, the fixture flashes all errors three times each.
- Errors are shown in the display regardless of display status: they override an inactive display and any other information that the display might be showing.
- If an error is present, the status LED flashes red.

The possible error messages are listed below:

Short code	Long message and explanation
APER	AW POS ERROR Animation Wheel position error.
ARER	AW ROT ERROR Animation Wheel rotation error.
C1ER	COLORWHEEL 1 ERR Color Wheel error.
CECM	COM ERR CMY CMY module communication error.
CEEF	COM ERR EFFECT Effects module communication error.
CELD	COLOR ENGINE ERR LED DRV LED driver communication error.
CEPT	COM ERR PAN TILT Pan/tilt system communication error.
CEZF	COM ERR Z/F Zoom/focus effect communication error.
CMTC	CMY TEMP CUTOFF CMY module temperature cutoff activated.
CMTE	CMY TEMP SEN ERR CMY module temperature sensor error.
COLD	FIXTURE COLD Fixture too cold. Physical movement of effects is disabled until fixture has warmed up.
CTER	CTC ERROR CTC flag position error.
CYER	CYAN ERROR Cyan flag position error.
EFTC	EFF TEMP CUTOFF Effects module temperature cutoff activated.
EFTE	EFF TEMP SEN ERR Effects module temperature sensor error.
F2TC	FROST TEMP CUTOFF Frost effect temperature cutoff activated.
F2TE	FROST TEMP SEN ERR Frost effect temperature sensor error.

FAN	BASE FAN 1 ERR
FAN	BASE FAN 2 ERR
FAN	BASE FAN 3 ERR
FAN	BASE FAN 4 ERR
FAN	HEAD FAN 1 ERR
FAN	HEAD FAN 2 ERR
FAN	HEAD FAN 3 ERR
FAN	HEAD FAN 4 ERR
FAN	HEAD FAN 5 ERR
FAN	HEAD FAN 6 ERR
FAN	HEAD FAN 7 ERR
FAN	HEAD FAN 8 ERR
FAN	HEAD FAN 9 ERR
FAN	HEAD FAN 10 ERR
FAN	HEAD FAN 11 ERR
FBEP	PAN FBACK ERR Pan position magnetic indexing system timeout. Fixture is unable to correct pan position (but pan movement will often still be possible).
FBET	TILT FBACK ERR Tilt position magnetic indexing system timeout. Fixture is unable to correct tilt position (but tilt movement will often still be possible).
FBEZ	ZOOM FBACK ERR Zoom effect position magnetic indexing system timeout. Fixture is unable to correct zoom position (but zoom effect will often still be useable).
FOER	FOCUS ERROR Focus position error.
FRCE	FRAMING COM ERROR Framing module communication error.
FRTC	FR TEMP CUTOFF Framing module temperature cutoff activated.
FRTE	FR TEMP SEN ERR Framing module temperature sensor error.
FSER	FRAMING1 INS ERR Framing blade 1 insertion position error.
FSER	FRAMING1 ANG ERR Framing blade 1 angle position error.
FSER	FRAMING2 INS ERR Framing blade 2 insertion position error.
FSER	FRAMING2 ANG ERR Framing blade 2 angle position error.
FSER	FRAMING3 INS ERR Framing blade 3 insertion position error.

FSER	FRAMING3 ANG ERR Framing blade 3 angle position error.
FSER	FRAMING4 INS ERR Framing blade 4 insertion position error.
FSER	FRAMING4 ANG ERR Framing blade 4 angle position error.
FW	SERVICE MODE Fixture in Service Mode.
G1ER	GOBO W 1 ERR Gobo Wheel 1 position error.
G2ER	GOBO W 2 ERR Gobo Wheel 2 position error.
HFER	HEAVY FROST ERROR Heavy frost effect position error.
IRER	IRIS ERROR Iris effect position error.
LDTC	LED TEMP CUTOFF LED temperature cutoff activated.
LDTE	LED TEMP SEN ERR LED temperature sensor error.
LETC	LED BOARD TMP CUTOFF LED PCB temperature sensor cutoff activated.
LETE	LED BOARD SEN ERR LED PCB temperature sensor error.
LFER	LIGHT FROST ERR Light frost effect position error.
MAER	MAGENTA ERR Magenta flag position error.
MMER	MISSING MODULE ERR Impossible to communicate with a module that should be present. Module missing or not correctly connected.
NFCE	NFC ERROR NFC communication not working.
PAER	PAN ERROR Pan position electrical indexing system timeout.
PRIE	PRISM INS ERR Prism insertion position error.
PRRO	PRISM ROT ERR Prism rotation error.
PSER	PAN SENSOR ERROR Fixture unable to retrieve reliable data from pan position sensor.
PTCM	P/T SENSOR ADJUST Pan/tilt sensors are incorrectly adjusted.

PTTC	PAN TILT TEMP CUTOFF Pan/tilt PCB temperature cutoff activated.
PTTE	PAN TILT TEMP ERROR Pan/tilt PCB temperature sensor error.
PRRO	PRISM ROT ERR Prism rotation error.
PUTC	PSU TEMP CUTOFF PSU temperature cutoff activated.
PUTE	PSU TEMP SEN ERR PSU temperature sensor error.
R1ER	GOBO W 1 ROT ERR Gobo Wheel 1 rotation error.
R2ER	GOBO W 2 ROT ERR Gobo Wheel 2 rotation error.
SEER	ARTNET SOURCES EXCEEDED / ETH SOURCES EXCEEDED / SACN SOURCES EXCEEDED Number of Art-Net / Ethernet protocol / sACN control sources exceeded.
SRNM	SERIAL NUMBER MISMATCH One of the modules originally installed and calibrated in the fixture has been replaced with a module from another fixture.
TIER	TILT ERROR Tilt position electrical indexing circuit timeout.
TSER	TILT SENSOR ERR Fixture unable to retrieve reliable data from tilt position sensor.
UITC	UI PCB TEMP CUTOFF User interface module temperature cutoff activated.
UITC	UI TEMP CUTOFF User interface (LCD display and control panel) temperature cutoff activated.
UITE	UI TEMP SEN ERR User interface (LCD display and control panel) temperature sensor error.
WEER	WASH EFFECT ERROR Wash effect position error.
YEER	YELLOW ERROR Yellow flag position error.
ZFTC	ZF TEMP CUTOFF Zoom/focus module temperature cutoff activated.
ZFTE	ZF TEMP SEN ERR Zoom/focus module temperature sensor error.
ZOER	ZOOM ERROR Zoom position error.
ZSER	ZOOM SENSOR ERROR Zoom position sensor error.

Accessories and service procedures

This section gives instructions for service procedures that may be carried out by the user. For any procedure that is not described below or in the MAC Viper XIP Safety and Installation Manual, please contact your Martin supplier for assistance.

Before carrying out service on the fixture, read the ‘Safety Information’ section of the fixture’s Safety and Installation Manual that is included at the end of this User Guide, supplied with the fixture and available for download from the Martin website at www.martin.com. Do not remove any cover from the fixture unless the fixture is in a dry location under dry conditions.

Uploading new firmware

Important! Do not switch the fixture off or disconnect the source of the firmware during an update, or the firmware will be corrupted.

Fixture information and settings are not affected when you upload new firmware to the fixture.

All MAC Viper XIP fixtures that are powered on and connected via a DMX link to the fixture that you update will also have their firmware updated.

If you update firmware to a newer version, check the MAC Viper XIP area of www.martin.com to see whether an updated version of the fixture’s User Manual is available for the new firmware.

You can check the currently installed firmware version in the INFORMATION menu in the fixture’s control panel. Firmware updates can be downloaded automatically from the Martin cloud using the Martin Companion software suite on a PC connected to the Internet.

You can update the fixture’s firmware using one of the following methods:

- A USB memory device inserted into the USB port beside the fixture’s control panel.
- A Windows PC running the Martin Companion application with a Martin Companion Cable USB/DMX hardware interface connected either to the fixture’s DMX IN socket or to the DMX link.
- A Martin P3 System Controller or Windows PC running the Martin P3-PC application, connected to the fixture(s) via network cables. See the P3 System Controller user manual for more information.

Installing using a USB memory device

The following are required in order to install firmware using a USB flash drive:

- The MAC Viper XIP ‘.BANK’ firmware update file, which the Martin Companion application will download automatically when you run Martin Companion on a PC with an Internet connection.
- A USB flash drive with the firmware update file copied from a PC into the USB flash drive’s root directory.

To install the MAC Viper XIP firmware:

1. Download the ‘.BANK’ firmware file from the Martin cloud within the Martin Companion Application and press **Download USB Stick Firmware...**
2. Read the firmware release notes carefully to check for any instructions or warnings, and copy the firmware file to the root directory of the USB flash drive.
3. Disconnect the DMX data link from the MAC Viper XIP.
4. Insert the USB flash drive into the MAC Viper XIP’s USB host socket. The fixture should recognize the USB flash drive and illuminate the display. If the fixture does not recognize the USB flash drive, navigate to **SERVICE** → **USB** in the fixture’s control panel.
5. **AVAILABLE FIRMWARE** will appear in the display. You can now scroll through the firmware versions available.

6. To install a firmware version, select it and press ENTER. The MAC Viper XIP asks you to confirm installation of the new firmware. Press ENTER to confirm and press MENU to exit without confirming.
7. Allow the fixture to install the firmware and reboot. Do not remove the USB flash drive until the fixture has successfully rebooted.
8. Remove the USB flash drive. The newly-installed firmware version will now be displayed in the **INFORMATION** menu.
9. Reconnect the data link.

Installing using a PC and Martin Companion

The following are required in order to install firmware using a PC:

- A Windows PC running the latest version of the Martin Companion software suite (available for download free of charge from the Martin website at www.martin.com).
- The MAC Viper XIP firmware file, which the Martin Companion application will download automatically when you run Martin Companion on a PC with an Internet connection.
- The Martin Companion Cable USB-DMX hardware interface, available from your Martin supplier by ordering P/N 91616091.

To install the MAC Viper XIP firmware using a PC and Martin Companion:

1. Apply power to the MAC Viper XIP fixture(s) and allow it to boot.
2. Connect the Martin Companion Cable's USB connector to a USB port on your PC. Connect the Martin Companion Cable's XLR connector either directly to the fixture's DMX IN connector or to the DMX link.
3. Start the PC and launch the Martin Companion application. Check that Martin Companion correctly detects the Martin Companion Cable (a green dot should appear next to **USB Connected** in the top right-hand corner of the window).
4. Locate the latest MAC Viper XIP firmware in Martin Companion's **Firmware** window.
5. Start the firmware update by clicking **Update Firmware** in Martin Companion. Do not disconnect the Martin Companion Cable or power off the fixture(s) until the upload is complete and the fixture(s) has successfully rebooted.
6. If you are updating multiple fixtures over a DMX link, check that they have all rebooted correctly.

Fixture-to-fixture firmware uploads

It is possible to update the firmware in one fixture (using a USB flash memory flash memory device, for example), and then use that fixture to carry out a fixture-to-fixture firmware upload. This method will install the new firmware in all the other fixtures that are powered on and connected to the same DMX / RDM / Art-Net data link. You must use the control panel of the fixture with the new firmware to send the firmware out to the other fixtures on the data link. The other fixtures will automatically recognize that firmware is being sent to them and accept the firmware update. Only MAC Viper XIP fixtures will accept the new firmware – other types of fixture will ignore it.

To carry out a fixture-to-fixture upload:

1. Apply power to the fixture that has the new firmware, apply power to the fixtures that you want to send the firmware to, and wait for all the fixtures to reset. Disconnect any DMX, Art-Net, sACN or P3 controllers from the data link.
2. In the fixture that has the new firmware, open the SERVICE menu and go to FIXTURE TO FIXTURE FW. Select from UPLOAD VIA DMX512 or UPLOAD VIA ART-NET, depending on the type of data link used, and select START. The firmware will be uploaded to the other fixtures on the data link using RDM protocol.

   Note that fixtures on an Art-Net link must be in the same DMX universe.

The FORCE command forces all connected fixtures to accept the new firmware, even if they already have that firmware version installed (if fixtures already have a firmware version installed, they will normally ignore uploads of that same firmware version).

You can select from two firmware transfer speeds: HIGH SPEED and HIGH STABILITY. If you encounter problems that may be caused by interference, imperfect data connectivity, external noise, etc. while you are trying to upload firmware, select HIGH STABILITY. This sends each data packet twice and may resolve stability issues.

3. When the firmware upload is complete, the fixtures that have received firmware will reboot on the new firmware.

Installing a Universal Connect Module

Universal Connect Modules available from various manufacturers can be installed on the MAC Viper XIP. The module mounts onto the fixture's connections/control panel in place of the battery/USB port cover.

To install a Universal Connect Module:

1. See illustration below. Remove the two screws (arrowed) from the plastic battery/USB port cover and lever the cover gently away from the connections/control panel with a plastic lever (or flat-headed screwdriver). This cover mates with the fixture's USB port with a rubber seal, so there will be some resistance when you lever the cover off. Do not remove the yellow rubber battery cover that becomes visible when you remove the plastic battery/USB port cover.

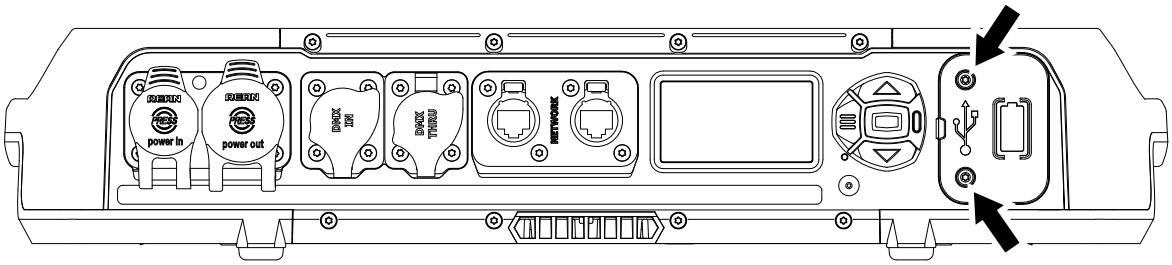

2. See illustration on right. Line up the USB-C connector on the back of the Universal Connect Module with the fixture's USB port. Make sure that you feel the USB plug reaching the USB header, then push the module into position on the connections/control panel so that the USB connector mates with the USB port in the fixture. Reinstall the two screws (arrowed) from the original cover. You will probably need to unscrew the antenna temporarily for easy access to the lower of the two screws.

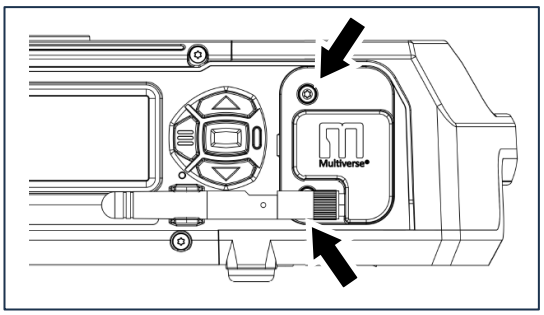

To keep the battery cover in a safe and convenient place, it is possible to fit the cover into one of the head air filter compartments:

1. Remove the head air filter cover and head air filter on the tilt lock side of the fixture's head following the instructions in the 'Service and Maintenance' chapter of the fixture's Safety and Installation Manual included at the end of this User Manual.

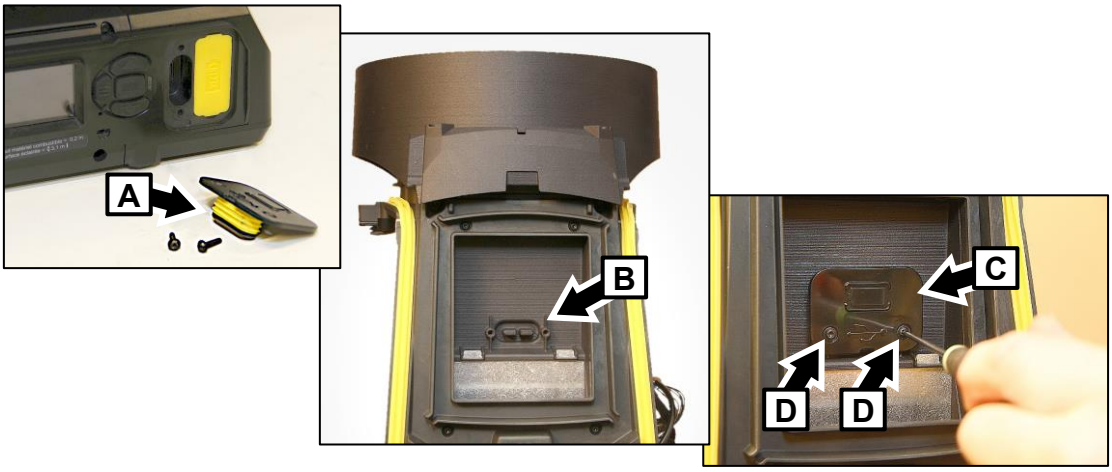

2. See photos above. Fit the battery cover into the space provided behind the air filter, pushing the yellow seal **A** into the recess **B** with the main body of the battery cover **C** pointing upwards, towards the front of the head.
3. Fasten the battery cover into its storage space using the two screws **D** provided in the storage space.
4. Reinstall the air filter and air filter cover as described in the Safety and Installation Manual.

Installing a Hexcel Louver

A Hexcel Louver for the MAC Viper XIP is available from City Theatrical, Part Number 2817. See details at www.citytheatrical.com.

See illustration on right. The Hexcel Louver mounts onto the head using the four screws provided on the front of the head, two screws (arrowed), on each side.

Installing a Concentric Ring louver

A Concentric Ring Louver for the MAC Viper XIP is available from City Theatrical, Part Number 2816. See details at www.citytheatrical.com.

See illustration on right. The Concentric Ring Louver mounts onto the front of the head using the four screws (arrowed), two screws on each side of the head.

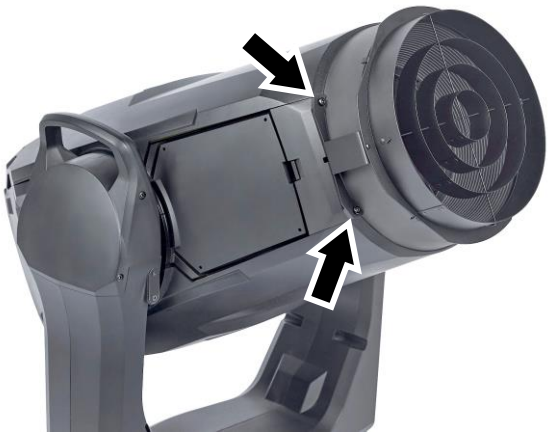

Installing a Followspot Handle

A Followspot Handle for the MAC Viper XIP is available from City Theatrical, Part Number 2815. See details at www.citytheatrical.com.

See illustration on right. The Followspot Handle mounts onto the head of the fixture using the four screws (arrowed) in the front and back of the head. You can mount the Followspot Handle on either side of the head.

Set the fixture to Followspot Mode in the control menus, via RDM, on the Control/Settings DMX channel or via P3 when using the Followspot Handle.

- FOLLOWSPOT MODE disables DMX control of pan and tilt, releasing the head for manual aiming.
- The TOGGLE HOLD command in the fixture's control panel shortcut menu holds the head stationary or releases it.

Removing the top head cover

Seal care

The fixture's yellow rubber seals, particularly in the head, can become sticky over time. This can make covers difficult to remove, and you can risk displacing or deforming seals during cover removal. To make service easier and protect the seals, apply a very thin film of silicone grease to them when servicing the head. Apply just enough grease to act as a release agent. Wipe off any excess grease. When the grease is correctly applied it should hardly be visible.

Cover removal

To remove the top head cover:

1. Disconnect the fixture from power and allow it to cool for 20 minutes.
2. Place the fixture on a stable work surface, tilt the head so that the Martin logo is facing the correct way up – in this position the top head cover faces upwards – and apply the tilt lock.
3. See illustration below. Release the four captive screws (arrowed) in the top head cover. On each side of the head, push the head cover release latch towards the front of the head and lift the head cover up slightly to release it. It is possible to release the head cover from the latches one side at a time, but do not apply excessive force to the head cover.

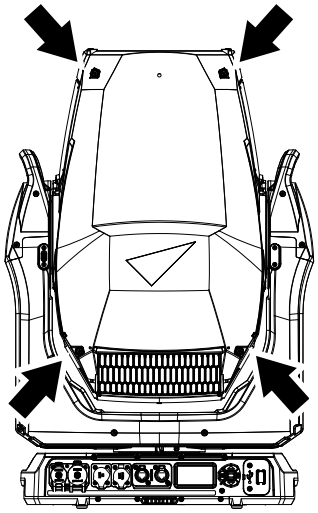

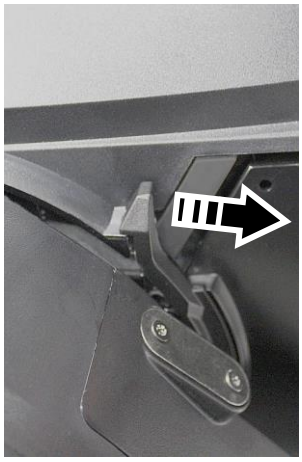

4. When you have released the head cover on both sides of the head, lift the head cover up completely and either disconnect the head cover safety wire (see illustration on right) or leave the head cover hanging on the safety wire.

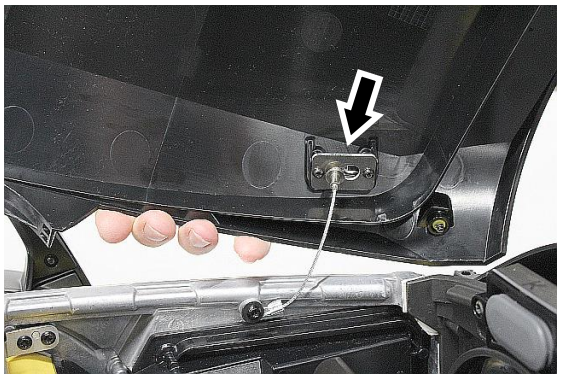

Reinstalling the head cover

To reinstall the head cover:

1. Make sure that the safety wire is securely attached using its push-and-slide lock (see illustration on previous page).

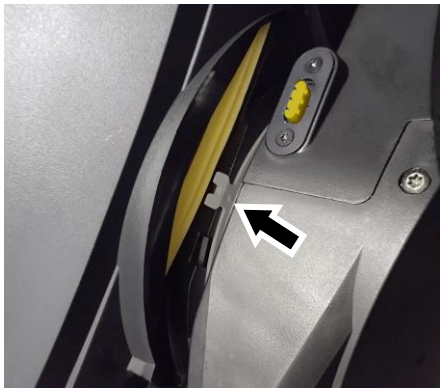

2. See illustration above. A tilt insert sits around the tilt pivot on each side of the yoke. The tilt inserts only need to be removed when removing the yoke cover – you should leave them in position when removing and reinstalling head covers. However, you must make sure that the tabs (arrowed) in the inserts on both sides of the yoke fit ***inside*** the head cover when you reinstall the cover as shown in the illustration below.

Incorrect – tab outside head cover

Correct – tab inside head cover

3. The rubber seals in the head can become sticky over time, making covers difficult to remove and making it possible to deform or misplace the seal. Apply a very thin layer of silicone grease to the rubber seals to act as a release agent for the next time a head cover is removed.
4. Place the head cover onto the head, checking that the tabs in the tilt inserts fit *inside* the head cover. Make sure that the head cover release latches (see illustration on previous page) click towards the back of the head to hold the head cover in place.
5. Reinstall the four head cover screws. **Important!** Do not overtighten the head cover screws – apply a maximum torque of 1.5 Nm.
6. Check that the head cover is secure, with no gaps visible around any part of the cover.

7. Release the tilt lock before operating the fixture.

Internal effect module calibration

The MAC Viper XIP is calibrated at the factory when its effects modules are installed. We therefore recommend that you keep the original modules with the fixture if you disassemble the fixture for service. If you swap modules from one fixture to another, the fixtures may need to be recalibrated if it is important for you to maintain consistent color characteristics across different fixtures.

Replacing rotating gobos

The MAC Viper XIP uses specially designed borosilicate 3.3 rotating gobos. The gobos are a custom size. Their external diameter is 27.1 mm +0/-0.2 mm (1.067 in. +0/-0.008 in.), and the image diameter is 22 mm (0.866 in.). The gobo thickness is 1.1 mm +/- 0.1 mm (0.04 in. +/- 0.004 in.). The gobos are manufactured in Borofloat 33 glass with a heavy matted aluminum coating.

Although the goboholders on Gobo Wheel 1 are different from the goboholders on Gobo Wheel 2, the actual gobos are the same type and size and can be interchanged no matter which wheel they are installed on.

Replacement gobos must have the same dimensions, construction, materials and quality as the gobos supplied as standard. Using gobos that do not meet this requirement – such as metal gobos – will very probably cause damage that is not covered by the product warranty.

Optical components have fragile coatings and are exposed to very high temperatures. Handle and store components with care.

See ‘Rotating gobos’ on page 11 for names, illustrations and part numbers of the gobos installed as standard.

Avoiding damage to gobos

Follow these precautions when handling, using and storing gobos:

- Do not use gobos with dark coatings on either side, as these will absorb heat – either directly from the light source or reflected back from other optical components – and will not be durable.
- Do not use metal gobos in the MAC Viper XIP: their durability may be reduced when used in this fixture.
- Store all gobos in a dust-free environment with approx. 50% humidity.
- Wear clean nitrile cleanroom gloves when handling gobos.
- Avoid scratching coated and uncoated sides.
- Do not place a gobo with the coated side face-down on any surface.
- Avoid touching the other gobos when removing a gobo from a rack: the sharp edge of one gobo can scratch the others.
- Keep gobos perfectly clean to reduce the risk of heat damage.
- When cleaning gobos, use a repeated dabbing action rather than a rubbing action. When rinsing, use distilled or even better deionized water to avoid residue that will appear as drying marks.
- If possible, clean the coated side of gobos with dust and oil-free compressed air only. If the coated side is contaminated with oil, clean with isopropyl alcohol and optics cleaning tissues.
- Clean the uncoated side of gobos with isopropyl alcohol or photographic quality lens-cleaner and optics cleaning tissues.
- Do not try to clean gobos in an ultrasound bath, as this may cause delamination of the coating.
- Do not use acidic or alkaline cleaning solutions, as they will attack the aluminum coating.
- Correct gobo orientation is critical. Read the guidelines given in this chapter carefully before installing a gobo.

Goboholder clips

See photo on right. Goboholders in the MAC Viper XIP have grooves **A** around their edges that are held in clips **B** in the gobo wheel.

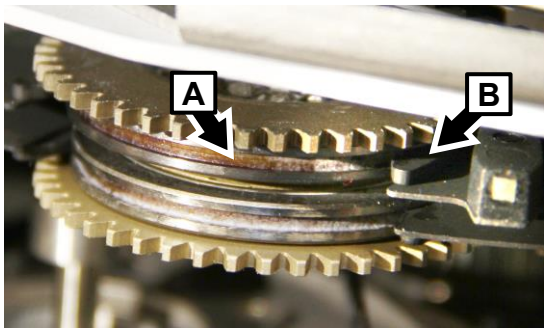

Goboholder reference marks

See photos on right. The goboholders in the MAC Viper XIP have magnets (arrowed) that you can use as reference points.

Gobo replacement procedure

We recommend that you replace goboholders one at a time. This makes it easier to orient the goboholders correctly in the wheel.

To replace a rotating gobo:

1. Remove the top head cover as described earlier in this chapter.
2. Release the tilt lock, tilt the head to a convenient angle for access to the gobo wheels and reapply the tilt lock.
3. Gobo wheel 1 is closest to the LED light source, Gobo wheel 2 is closest to the front lens. Rotate the gobo wheel until the gobo that you want to replace is easily accessible.
4. Without rotating the gobo wheel, place your thumb on the teeth of the goboholder and rotate the goboholder until the magnet is pointing directly away from the center of the gobo wheel. This gives you a reference. You will need to reinstall a goboholder with the magnet in exactly this position.
5. See photo on right. Using a pair of flat-nosed pliers, grasp the teeth of the goboholder firmly and pull the goboholder out of its clip in the gobo wheel.

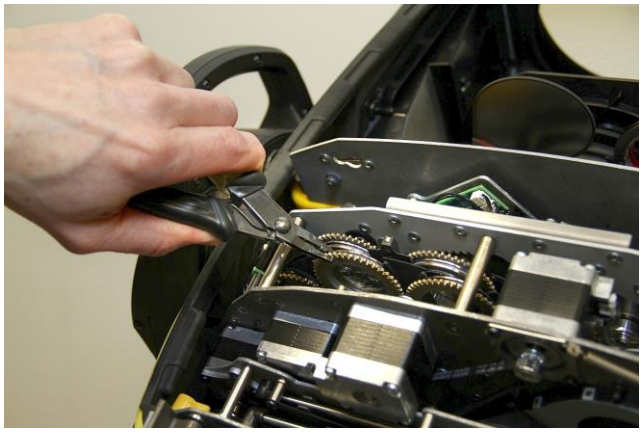

For instructions on how to install a new gobo in a goboholder, see later in this section.

To reinstall a goboholder in the gobo wheel:

1. Rotate the goboholders in the wheel so that the magnets are pointing directly away from the center of the gobo wheel.
2. Line up the goboholder that you are installing with its magnet also pointing directly away from the center of the gobo wheel.

3. Bend the thin metal plate on the gobo wheel away from the wheel very slightly so that you have room to slide the goboholder back into its clip in the gobo wheel.
4. Holding the goboholder teeth with flat-nosed pliers, slide the goboholder back into the jaws of its clip.
5. Check that the gobo is pushed fully into its clip and held securely. To check that the goboholder is correctly installed, rotate the goboholder at least 180° in both directions in the gobo wheel and check that it and all the other goboholders move freely.

Replacing a gobo in a goboholder

The rotating gobos in the MAC Viper XIP are held in their holders by springs and can be removed from their holders as described in this section.

Gobo orientation: general

Make sure that you install gobos facing in the correct direction, or they may suffer heat damage. The orientations shown below are correct in most cases, but consult your Martin dealer or gobo supplier if you are in any doubt about the orientation of a specific gobo type.

Coated Glass gobos

The heavy matted aluminum coated borosilicate gobos in the MAC Viper XIP are factory-installed with the more reflective sides facing towards the LED light source. Replacement gobos must also be installed with more reflective sides facing the LEDs in order to avoid heat damage.

More reflective side towards LEDs

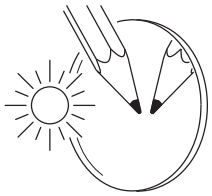

To minimize the risk of gobo overheating and damage, turn the more reflective side of a coated gobo towards the light source.

Less reflective side away from LEDs

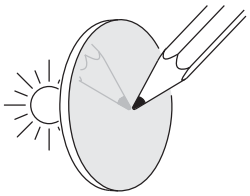

The less reflective side of a coated gobo will absorb less heat if it faces away from the light source.

Textured Glass gobos

Flat side towards goboholder

If you install a textured glass gobo in the fixture, note that a textured glass gobo sits most squarely in a goboholder with the flat side placed down into the recess in the goboholder. If in doubt, consult your Martin dealer or gobo supplier. We recommend that textured glass gobos are glued into the goboholder.

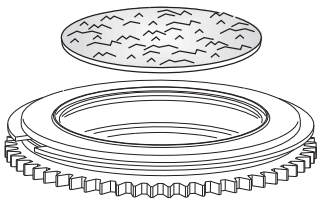

Image/text gobos

True image towards LEDs

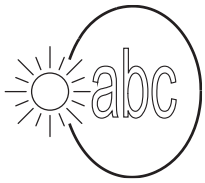

Reversed image away from LEDs

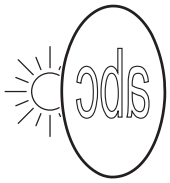

Gobos that have a specific left/right orientation (such as text gobos) will appear correctly in the projection if they appear correctly when viewed from the side that faces towards the LED light source.

Goboholder and gobo orientation, Gobo Wheel 1 (Aerial Wheel)

- Gobo Wheel 1 is the wheel that is closest to the LED light source.
- The side of the goboholder with the gobo retaining spring and with the teeth faces towards the LED light source.
- The shiny side of the gobo faces towards the spring and towards the teeth in the goboholder so that it faces towards the LED light source.
- The white, non-reflective side of the gobo faces away from the spring and away from the teeth in the goboholder so that it faces towards the front lens.

Goboholder and gobo orientation, Gobo Wheel 2 (Breakup Wheel)

- Gobo Wheel 2 is the wheel that is closest to the front lens.
- The side of the goboholder with the gobo retaining spring and without the teeth faces towards the LED light source.
- The shiny side of the gobo faces towards the spring and away from the teeth in the goboholder so that it faces towards the LED light source.
- The white, non-reflective side of the gobo faces away from the spring and towards the teeth in the goboholder so that it faces towards the front lens.

Gobo orientation, Wheels 1 and 2

On both gobo wheels in the MAC Viper XIP:

- Images or text on gobos must appear correctly (i.e. not flipped left to right) when looking at the goboholder from the side with the spring.
- The textured side of textured glass gobos must always face towards the spring. The flat side of textured gobos must face downwards so that the gobo sits flat in the goboholder.

Gobo alignment

See illustrations on right. Note the position of the alignment marks (arrowed) on goboholders and gobos. Install gobos with the alignment marks next to each other.

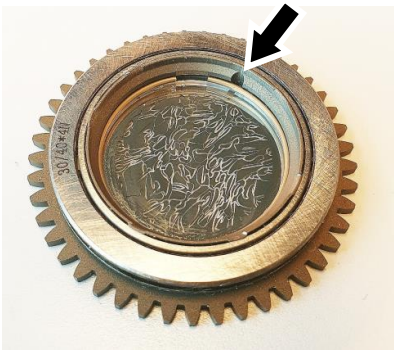

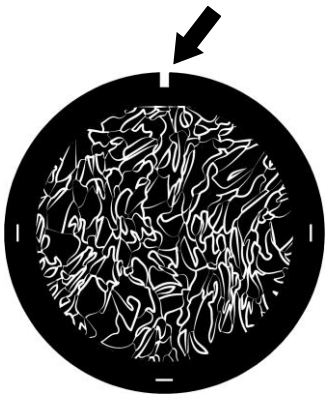

Replacing a gobo

Avoid getting grease from your fingers or dirt onto gobos. Hold gobos by their edges only. Wear clean nitrile cleanroom gloves when handling gobos.

To replace a gobo in a goboholder:

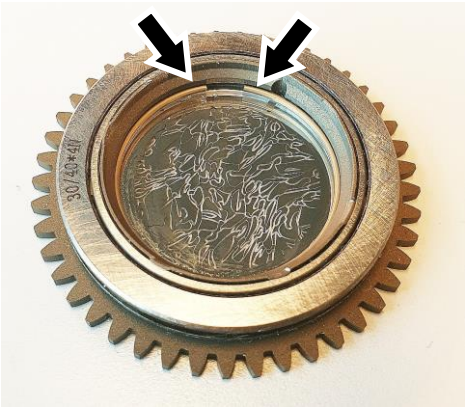

1. See photo on right. Place the goboholder on a clean surface with the recess for the gobo and gobo spring facing upwards. Note the position of the ends (arrowed) of the gobo retaining spring. Taking care not to scratch the gobo, use a flat-bladed screwdriver or similar tool inserted between the spring and the goboholder (not between the spring and the gobo), to lever one end of the retaining spring out of the groove in the goboholder. Lift the retaining spring out of the goboholder.
2. Turn the goboholder over so that the recess faces downwards and let the gobo fall out of the holder onto a clean, soft surface. Turn the goboholder over again and put it on the surface with the recess facing upwards.
3. Holding the new gobo by its edges, insert it into the goboholder with the alignment marks on gobo and goboholder correctly lined up. The correct gobo orientation is different for Gobo Wheels 1 and 2. Make sure that you insert the gobo facing the correct way round by referring to the guidelines earlier in this section.
4. Check that the gobo is seated flat in the holder. See photo at Point 1 above. Insert the retaining spring into the goboholder in its original position and press it into its groove in the goboholder. **Important!** The gap in the spring must be in the position shown in the photo at Point 1. Check that the spring is pressed as flat as possible against the gobo and that the gobo is held securely in the goboholder.
5. Reinstall the goboholder in the gobo wheel and reinstall the top head cover following the directions given earlier in this section.

Compliance and specifications

See the Safety and Installation Manual attached to this user manual for details of this product's compliance with national and international standards, FCC rules etc.

See the Martin website at www.martin.com for technical specifications for this product.

Martin®

www.martin.com

MAC Viper XIP

Safety and Installation Manual

Martin®

Dimensions

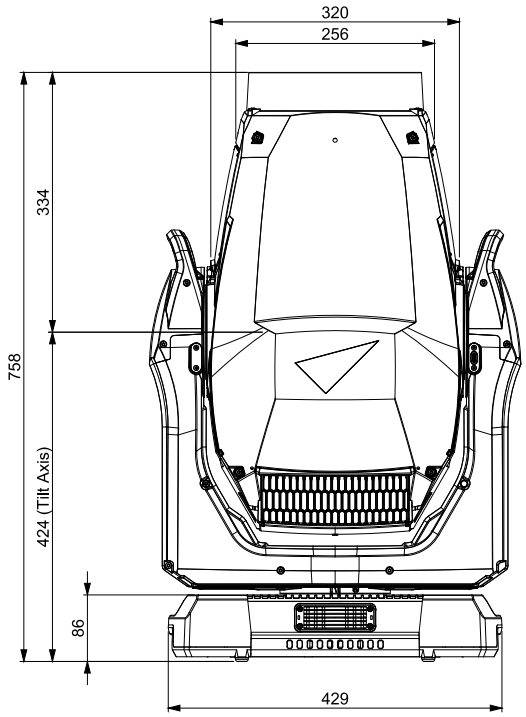

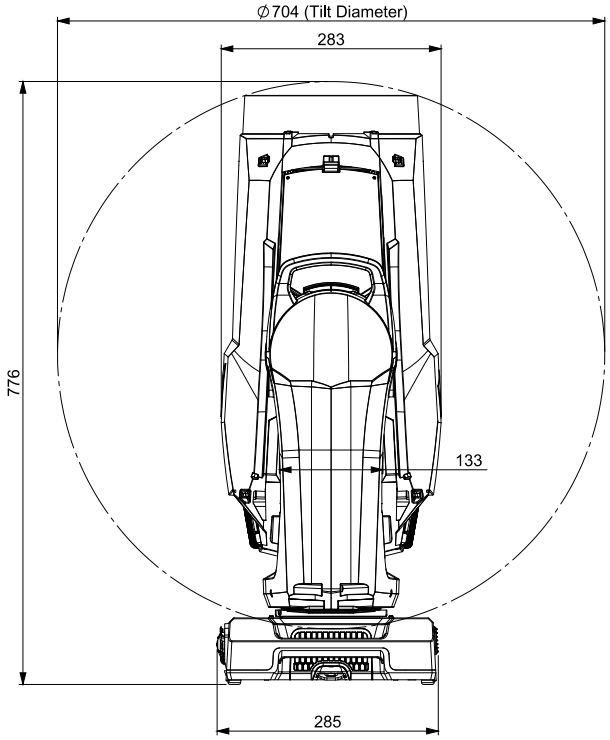

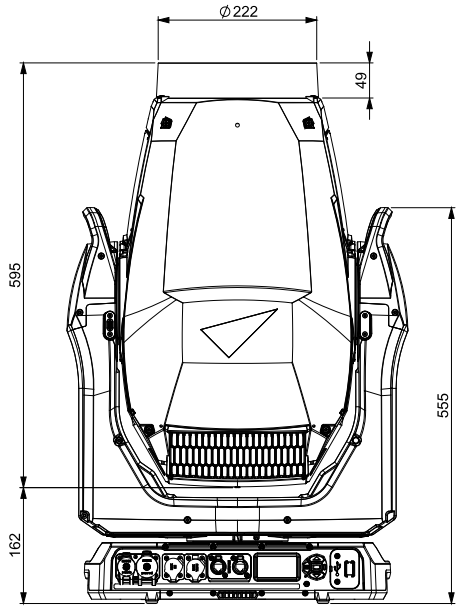

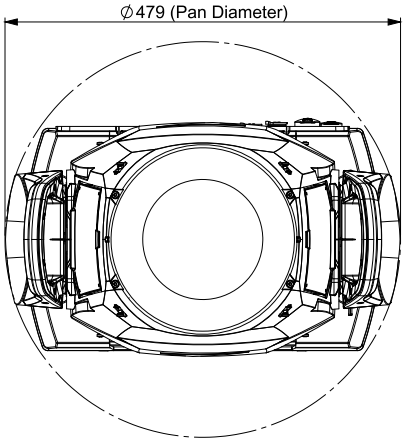

All dimensions are in millimeters

©2024-2025 HARMAN PROFESSIONAL DENMARK ApS. All rights reserved. Features, specifications and appearance are subject to change without notice. HARMAN PROFESSIONAL DENMARK ApS and all affiliated companies disclaim liability for any injury, damage, direct or indirect loss, consequential or economic loss or any other loss occasioned by the use of, inability to use or reliance on the information contained in this document. Martin is a registered trademark of HARMAN PROFESSIONAL DENMARK ApS registered in the United States and/or other countries.

HARMAN PROFESSIONAL DENMARK ApS, Olof Palmes Allé 44, 8200 Aarhus N, Denmark
HARMAN PROFESSIONAL, INC. 8500 Balboa Blvd., Northridge CA 91325, USA

www.martin.com

MAC Viper XIP Safety and Installation Manual, English, Revision E

Table of contents

Dimensions 2
Safety information 4
Introduction 10
- Packing and unpacking 10
- Condensation 10
- Before using the product for the first time 10
- Applying mains power 10
- Cold starting 11

Overview 11
- Tilt lock 11

Physical installation 12
- Installation location 12
- Installation environment 12
- Avoiding damage from other light sources 12
- Standing the fixture on a flat surface 12
- Mounting the fixture on a truss 13
- Securing with a safety cable 13

AC mains power 15
- Linking fixtures to power in a chain at 100-120 V 15
- Linking fixtures to power in a chain at 200-240 V 15
- Connecting to power 16

Data connections 16
Service and maintenance 17
- Service mode 17
- Cleaning 17
- Cleaning air filters 18
- Battery replacement 19
- Installing a Universal Connect Module Accessory 20
- Lubrication 20
- Seal care 20

Safety information

WARNING!

Read the safety precautions in this manual before installing, powering, operating or servicing this product.

The following symbols are used to identify important safety information on the product and in this manual:

Warning!	**Warning!**	**Warning!**	**Warning!**	**Warning!**	**Warning!**
Safety hazard. Risk of severe injury or death.	***Hazardous voltage. Risk of lethal or severe electric shock.***	***Fire hazard.***	***Burn hazard. Hot surface. Do not touch.***	***Intense light emission.***	***See user documentation.***

Warning! This fixture corresponds to Application Group BLH-C according to EN IEC 62471-7 for stage lighting. It is a Risk Group 3 product according to EN 62471 and Risk Group 2 product according to IEC/TR 62778 (see “Protection from eye injury” on page 8 for full details). Possibly hazardous radiation emitted from this product. May be harmful to the eyes. Do not stare directly into the light output from the product. Position the product so that prolonged staring into the product at a distance closer than 56 m (184 ft.) is not expected. Do not view the light output with optical instruments or any device that may concentrate the beam.

The MAC Viper XIP lighting fixture presents risks of severe injury or death due to fire and burn hazards, electric shock and falls if the safety precautions in this manual are not followed.

You may carry out external cleaning and service as described in the fixture’s user documentation, following the warnings and instructions provided, but any service operation not described in this Safety and Installation manual or in the fixture’s User Manual must be referred to an authorized Martin service technician.

The MAC Viper XIP is for professional use as a stage light only. It is not for household or general lighting applications. Respect all locally applicable laws, codes and regulations when installing, powering, operating or servicing the fixture.

Ensure that the installation complies with the provisions of ANSI/ESTA E1.58-2017. This standard gives important information on the temporary use of stage and studio lighting equipment outdoors that is supervised by qualified personnel while energized and inaccessible to the general public in the USA as referred to by NFPA 70 article 520.10. Touring shows in Canada must obtain a permit from the relevant authority before the first performance. Respect national and local regulations at all times.

The light source contained in this fixture must be replaced by Martin® Service or an authorized Martin Service partner only.

Install, operate and service Martin products only as directed in their user documentation, or you may create a safety hazard or cause damage that is not covered by product warranties.

Read this manual before installing, powering, operating or servicing the fixture. Follow the safety precautions and observe all warnings in this Safety and Installation Manual, in the fixture’s User Manual, and printed on the fixture.

The latest versions of this Safety and Installation Manual and the fixture's User Manual are available for download from the MAC Viper XIP area of the Martin website at www.martin.com. Before you install, operate or service the fixture, check the Martin website and make sure that you have the latest user documentation for the fixture. Document revisions are indicated at the bottom of page 2.

Technical Support

If you have questions about how to install or operate the fixture safely, please contact Harman Professional Technical support:

- For technical support in North America, please contact
  HProTechSupportUSA@harman.com
  Phone: (844) 776-4899
- For technical support outside North America, please contact your national distributor.

Protection from electric shock

The fixture has an ingress protection rating of IP54 that is applicable in EN/IEC regions (Europe and other countries). It has a 'Damp or Wet Locations' rating that is applicable in the USA and Canada. Damp locations are considered to be partially protected locations under stage and event canopies, marquees, tents, roofed open bars and similar locations, while 'Wet Locations' include most outdoor areas without cover or protective shields, or some indoor areas exposed to water dripping or splashing.

An IP54 and Wet Locations rating means that a fixture can withstand rain, splashing water, condensation etc. but not high-pressure water jets. The fixture is designed to be used under any weather conditions, but it must not be exposed to an artificially high volume of water (in a fountain, waterfall or shower, for example). The most extreme rain ever recorded had a volume of 400 mm / 16 inches per hour. The fixture is designed to withstand such a condition. A fountain, waterfall or shower can create a much bigger volume of water (up to 15 000 mm / 50 feet per hour). The fixture is not designed to withstand conditions like these.

Do not immerse the fixture in water.

Shut down power to the fixture immediately if extreme conditions such as flooding arise.

Do not expose the fixture to high-pressure water jets.

The fixture is designed for temporary outdoor installation only. Installing it permanently in an outdoor location could cause accelerated aging that would potentially affect its IP54 / Wet Locations rating. This would create a potential safety hazard and a risk of damage. Do not use the fixture for permanent outdoor lighting.

Do not install the fixture in locations where the air is aggressive to materials (where the air has a high salt or chlorine content, close to the sea or a swimming pool, for example).

Do not operate the fixture if the ambient temperature (Ta) falls below -10° C (14° F). Do not operate the fixture in ambient temperatures below 5° C (41° F) if ice is forming on the fixture. Protect the fixture from snow and ice. Freezing water may deform the fixture's housing, creating a safety hazard. Monitor weather conditions and take all appropriate safety precautions if a freezing hazard is forecast or present.

The fixture is rated IP54 / 'Wet Locations' only when the following types of connector are used on cables connected to the fixture:

- Neutrik powerCON TRUE1 NAC3FX-W-TOP connector at the power IN socket,
- Neutrik powerCON TRUE1 NAC3MX-W-TOP connector at the power THRU socket,
- Neutrik TOP series 5-pin locking XLR connectors at the XLR (DMX, RDM) data sockets, and
- Neutrik TOP series etherCON connectors at the Ethernet (Art-Net, sACN) data sockets.

Use only these connector types and use only cables that are suitable for the given application with respect to humidity, water and sunlight resistance.

The power and data connectors are fitted with rubber caps to protect from water ingress. Keep rubber caps installed at all times on all connectors that are not in use.

Do not install the fixture with the connections panel facing upwards in locations that require an IP54 / Damp or Wet Locations rating.

Support the weight of cable runs. Do not allow a length of cable to hang from a connector.

Arrange cables so that they arrive at connectors from below. Create a 'drip loop' if necessary (see drawing on right). With this arrangement, gravity will cause any condensation or water droplets to run away from connectors.

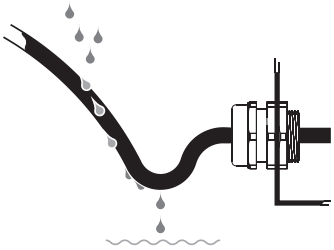

Drip loop

The fixture accepts AC mains power at 100-240 V~ (nominal), 50/60 Hz. Do not connect the fixture to mains power that is not within this range.

The fixture has a maximum total power consumption of 1040 W.

The fixture draws a maximum total current of:

- 11.0 A when connected to mains power at 100 V~
- 5.2 A when connected to mains power at 200 V~
- 4.6 A when connected to mains power at 240 V~.

Do not connect a device – or an interconnected daisy chain of devices – to power if the maximum resulting current draw will exceed the electrical ratings of any cable or connector used to supply power.

Before connecting any devices to the fixture's power throughput socket, check the maximum current draw of all the devices that you will connect to power in a chain. Do not exceed a total of 16 amps maximum when you add together the current draw for the entire chain, including the first device in the chain.

If you relay power from one fixture to another using power throughput sockets, observe the following safety limits, or you may create a risk of fire and electric shock:

- Do not connect a MAC Viper XIP device to the fixture's mains power thru/output socket when supplying the fixture with mains power from 100 V to 120 V. Do not connect any device that draws more than 5 A when operating within this mains power voltage range.
- Do not connect more than three (3) MAC Viper XIP fixtures in total to each other in an interconnected chain when supplying the fixture with mains power from 200 V to 240 V.

The fixture draws a typical half-cycle RMS inrush current of 17.0 A for the first 10 milliseconds when mains power is first applied to the fixture at 230 V~, 50 Hz.

The voltage and frequency at the power throughput socket are the same as that applied at the power input socket.

To connect the fixture to mains power, you must first obtain 12 AWG or 2.5 mm^2 power input cable that is 16 A rated and temperature-rated to suit the installation environment. In the USA and Canada, the cable must be UL-listed, type SJTW or equivalent. In the EU, the cables must be type H05RN-F or equivalent. Suitable cables with the correct connectors are available from Martin.

Ensure that the fixture is electrically connected to ground (earth) via the power input cable. Do not remove the protective coating on the housing or loosen screws to establish a separate ground (earth) connection from the fixture's chassis.

Use only a source of mains power that complies with local building and electrical codes and has both overload and ground-fault (earth-fault) protection.

Socket outlets or external power switches used to supply the fixture with power must be located near the fixture and easily accessible so that the fixture can easily be disconnected from power.

Disconnect the fixture from AC mains power before carrying out any installation, cleaning or maintenance work and when the fixture is not in use.

Isolate the fixture from power immediately if the power plug or any seal, cover, cable, or other component is damaged, defective, deformed, showing signs of water ingress or showing signs of overheating. Do not reapply power until repairs have been completed.

Before using the fixture, check that all power distribution equipment and cables are in perfect condition and rated for the electrical requirements of all connected devices.

Do not remove any cover from the fixture except as described in the fixture's user documentation.

The fixture contains components that are accessible and live at high voltage while the fixture is connected to power and that remain under tension for up to five minutes after power is disconnected. Wait for at least five minutes after disconnecting from power before opening any of the fixture's covers.

Open covers and carry out service of internal components in a dry location and in dry conditions only.

The DMX and Ethernet transceivers of the fixture are isolated/SELV to prevent ground loops and for safety reasons.

Do not use this equipment at an altitude of more than 2000 m (6570 ft.) above sea level.

Protection from burns and fire

Do not operate the fixture if the ambient temperature (T_a) exceeds 40° C (104° F).

The exterior of the fixture becomes hot during use. After 5 minutes of operation a surface temperature of 80° C (176° F) shall be expected. The maximum steady state surface temperature is also 80° C (176° F). Avoid contact by persons and materials.

Allow the fixture to cool for at least 15 minutes before handling.

Keep flammable materials well away from the fixture. Keep all combustible materials (e.g. fabric, wood, paper) at least 0.2 m (8 in.) away from the fixture.

Ensure that there is free and unobstructed airflow around the fixture. Provide a minimum clearance of 0.5 m (1.7 ft.) around fans and air vents.

Do not use the fixture to illuminate surfaces within 3.25 m (10.7 ft.) of the fixture.

Do not stick filters, masks or other materials onto any optical component.

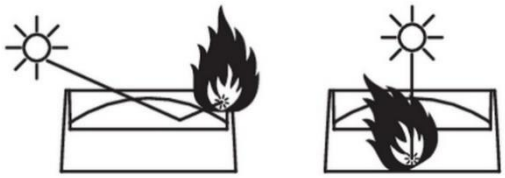

See drawing on right. The fixture's lenses can focus the sun's rays inside the fixture, creating a risk of fire and damage. Do not expose the front of the fixture to sunlight or any other source of powerful light from any angle, even for a few seconds. Make sure that the head will be pointing away from the sun and from any other potential source of powerful light at all times, even when the fixture is not in use.

Do not attempt to bypass thermostatic switches or fuses.

Protection from eye injury

This fixture corresponds to Application Group BLH-C according to EN IEC 62471-7 for stage lighting, Risk Group 3 according to EN 62471 when all photobiological risks are considered and Risk Group 2 according to IEC/TR 62778 for blue light only. It emits possibly hazardous optical radiation. It falls into the Risk Group categories shown below according to EN 62471 and IEC/TR 62778 under worst-case conditions:

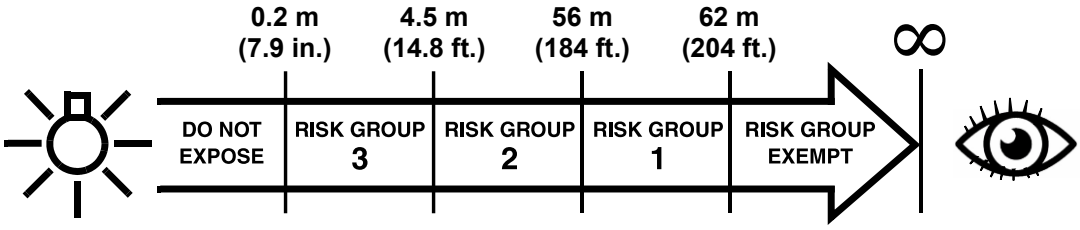

At a distance of less than 4.5 m (14.8 ft.) from the fixture, the light output can potentially cause eye or skin injury before an exposed person's natural aversion responses (blink reflex and reaction to skin discomfort) can protect them. At distances greater than 4.5 m (14.8 ft.), potential eye and skin injury hazards from the light output are normally prevented by natural aversion reflexes.

Position the fixture so that persons cannot be exposed to the fixture's light output at a distance of less than 4.5 m (14.8 ft.) from the fixture and so that prolonged staring into the light output at less than 56 m (184 ft.) is not expected.

Application Group BLH-C defines a time class (short time) <10 s that shall be respected within the declared RG2 distance in the case of intentional effect lighting or unintentional view into a stage luminaire.

Do not look directly into the fixture’s light output.

Do not look at the light output with magnifiers, telescopes, binoculars or similar optical instruments that may concentrate the light output.

Ensure that persons are not looking directly into the front of the fixture when the product lights up suddenly. This can happen when power is applied, when the product receives a DMX signal, or when certain control menu items are selected.

Disconnect the fixture from power at all times when the fixture is not in use.

Provide well-lit conditions to reduce the pupil diameter of anyone working on or near the fixture.

Protection from injury

The fixture weighs 37 kg (81.6 lbs.) not including rigging hardware.

When the fixture is in use, it must be either:

- fastened to a secure, stable structure such as a rigging truss, or
- standing on a stable horizontal surface where it will not present a danger of tripping or falling.

Install the fixture only as directed in this manual.

The fixture is not portable when installed.

Ensure that all supporting structures and hardware used can hold at least six (6) times the weight that they support (or more if required by locally applicable regulations).

Ensure that all rigging hardware items (rigging clamps, omega brackets etc.) are in perfect condition, are approved by a professional body such as TÜV for the weight that they will support, and that they comply with all locally applicable regulations.

Ensure that all supporting structures and rigging hardware items are suitable for the installation environment and will be safe under all weather and temperature conditions.

Monitor weather conditions and take all appropriate safety precautions if a hazard is forecast or present.

If suspending from a rigging structure, fasten the fixture to a truss or similar support using two rigging clamps and omega brackets. Do not try to suspend the fixture from only one rigging clamp. Do not use safety cables as the primary means of support.

When clamping a fixture to a truss or other supporting structure in any orientation apart from hanging vertically with the head pointing downwards, use half-coupler-type rigging clamps. Do not use G-clamps, quick-trigger clamps or any other type of clamp that does not completely encircle the supporting structure when fastened.

If there is any danger that this product may cause injury or damage if the primary means of attachment fails, secure it as described in this user manual with a securely anchored safety cable that will catch it if it falls. Ensure that all safety cables used for secondary attachment are in perfect condition, are approved by a professional body such as TÜV for the weight that they will secure, and that they comply with all locally applicable regulations.

Remove as much slack as possible from the safety cable (by looping it more than once around the chord of a rigging truss, for example). Make sure that, if a primary means of attachment fails, the fixture cannot fall more than 20 cm (8 inches) maximum before the safety cable catches it.

If the safety cable attachment point becomes deformed, do not suspend the fixture. Have the fixture repaired by an authorized Martin service partner.

Allow enough clearance around the head to ensure that it cannot collide with an object or another fixture when it moves.

Check that all external covers and rigging hardware are securely fastened.

Block access below the work area and work from a stable platform whenever installing, servicing or moving the fixture. Make sure that there is no risk of injury from falling parts, tools or other materials.

Do not operate the fixture with missing or damaged covers, shields or any optical component.

Do not lift or carry the fixture by its head. Support the fixture by its base only.

In the event of an operating problem, stop using the fixture immediately and disconnect it from power. Do not attempt to use a fixture that is obviously damaged.

Do not modify the fixture in any way not described in the fixture’s user documentation. Install only parts and accessories that are supplied by or approved by Martin for the fixture.

Refer any service operation not described in this manual to Martin Service or an authorized Martin service partner.

Introduction

Thank you for selecting the MAC Viper XIP moving head lighting fixture from Martin®.

This Safety and Installation Manual is supplied with the fixture. It gives details of installing and servicing the fixture as well as connecting to mains power. The MAC Viper XIP User Manual, containing full instructions for connecting to control data, setting up, controlling and monitoring the fixture is available for download from the MAC Viper XIP area of the Martin website at www.martin.com. If you have any difficulty locating this document, please contact your Martin supplier for assistance.

Before installing, operating or servicing the MAC Viper XIP, please check the fixture's area of the Martin website at www.martin.com and make sure that you have the latest user documentation for the product.

Not all product specifications are included in the fixture's user documentation. You can find full specifications for the fixture in the MAC Viper XIP area of the Martin website. The online specifications include information to help you order accessories such as cables, flightcases etc.

The fixture is supplied with this Safety and Installation manual and two Martin omega brackets for fastening a rigging clamp to the fixture base.

Packing and unpacking

Allow the fixture to cool for 30 minutes before packing it for storage or transport in a flightcase or packaging. If the fixture is wet, wipe it with a soft, dry cloth and apply power until the fixture is completely dry before packing. This will avoid moisture damage and mold.

If you move the fixture from a cold to a warm environment, remove it from its flightcase or packaging and give it at least two hours to acclimatize before you apply power. This will help to avoid damage due to internal condensation.

Condensation

When using the fixture in outdoor locations – especially locations with wide temperature variations and/or high humidity – we recommend that you keep power applied to the fixture at all times in order to avoid condensation inside the fixture. However, it is possible to shut down power to the fixture for up to 18 hours if followed by a period of 6 hours with power applied.

Before using the product for the first time

1. Check the support pages on the Martin Professional website at www.martin.com for the most recent user documentation and technical specifications for the fixture. Martin user manual revisions are identified by the revision letter at the bottom of the inside cover.
2. Read 'Safety information' on page 4 before installing, operating or servicing the fixture.
3. Unpack and ensure that there is no transportation damage before using the fixture. Do not attempt to operate a damaged fixture.
4. Check that the voltage and frequency of the local power source match the mains power requirements of the fixture.
5. Either hard-wire the fixture's power input cable to an AC mains power source or install as described in this manual a power plug (cord cap) that is suitable for local power outlets on the power input cable and connect the cable to an AC mains power outlet. If you need to fabricate a power cable, use only the cable and connector specified in this manual.

Applying mains power

The fixture does not have an on/off switch. It becomes active as soon as AC mains power is applied at the power input connector. Be prepared for the head to move and for the fixture to suddenly emit bright light.

Each time power is applied to the fixture, it will reset all effects and functions to their home positions. A reset typically takes around 45 seconds.

Cold starting

At +5° C (41° F) and below, the fixture starts up in cold-start mode. In this mode, the current to some motors is increased and reset speed is reduced. This makes sure that the fixture can reset safely without any step loss. After a successful reset, the fixture stays in cold-start mode until it has warmed up. In cold-start mode there is a slight increase in noise from the fixture. Some effects (especially gobo changes and speed) are slower than normal.

The fixture exits cold-start mode as soon as it reaches an internal temperature of approximately 20° C (68° F).

To warm up the fixture as quickly as possible, set LED output to full intensity. If you prefer the fixture not to project light during warmup, set the CMY and CTO flags to 99%, i.e. almost fully closed, and set all framing blades to 99%, i.e. almost fully inserted. Note that if you set these effects to 100%, LED output will be shut down and the LED warmup effect will be lost.

Overview

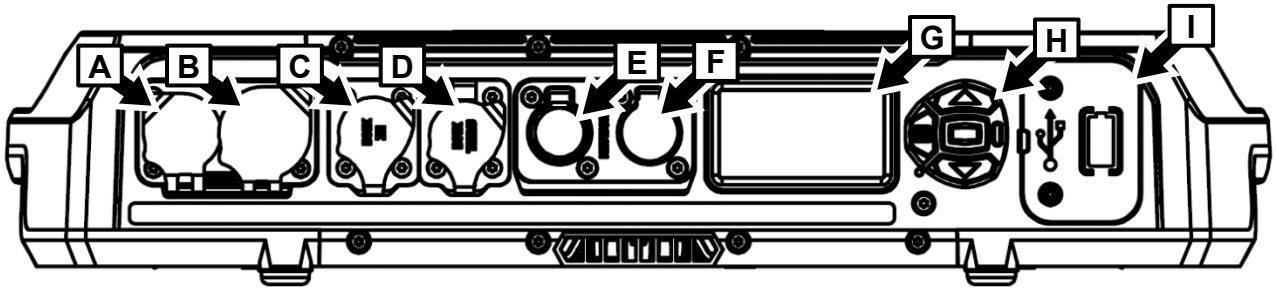

A – AC mains power IN (accepts Neutrik powerCON TRUE1 TOP or compatible)

B – AC mains power OUT/THRU (accepts Neutrik powerCON TRUE1 TOP or compatible)

C – DMX data IN (5-pin locking male XLR)

D – DMX data OUT/THRU (5-pin locking female XLR)

E – Control data Ethernet port A in/out

F – Control data Ethernet port B in/out

G – Control panel display

H – Control buttons

I – Cover for CR123A lithium battery and USB-C port (can be used with accessory options)

Tilt lock

The fixture has a tilt lock located on the yoke (see illustration on right) that can be applied during servicing, for example.

It is not necessary to release the tilt lock before transporting the MAC Viper XIP in its Martin flightcase, but the head must be angled at approximately 45° to match the flightcase insert.

Physical installation

Warning! Read ‘Safety information’ on page 4 before installing the fixture.

To avoid head collisions when installing MAC Viper XIP fixtures next to each other, allow a minimum center-to-center distance between fixtures of 704 mm (27.8 inches).

Martin can supply installation hardware such as rigging clamps and safety cables that are suitable for use with the fixture (see the product specifications on the MAC Viper XIP product page on the Martin website at www.martin.com).

Installation location

The MAC Viper XIP is designed for permanent or temporary indoor use or for temporary outdoor use. A fixture with an ‘IP54 / Wet Locations’ rating can withstand rain and splashing water, but it cannot withstand high pressure water jets or immersion in water.

Fasten the fixture to a secure structure or surface or stand it on a surface where it cannot be moved or fall over. If you install the fixture in a location where it may cause injury or damage if it falls, secure it as directed in this manual using a securely anchored safety cable that will hold the fixture if the primary fastening method fails.

Installation environment

The fixture has a rugged construction and is designed to withstand temporary outdoor conditions. However, it is not designed for use in extreme environments such as air with a high content of salt, chlorine, acid or other aggressive agents. Exposure to harsh environmental conditions like these may result in deterioration of the product that is not covered by the product warranty. If the fixture is exposed to salt etc., rinse it carefully in pure water.

The fixture is designed and tested according to the IP54 standard. This means that the fixture is dust-protected, not dust-tight. Ingress of dust is not entirely prevented, but it shall not enter in sufficient quantity to interfere with the safe operation of the fixture. If the fixture is used in dusty or sandy environments, cleaning will be required after use. Before using the fixture in a dusty or sandy environment, we recommend that you replace the gauze air filters in the head with the disposable air filters with a paper element that are available from Martin in sets of 12 (P/N 50400765). Air filter replacement takes no more than a few seconds.

Avoiding damage from other light sources

Do not point the light output from other lighting fixtures at the MAC Viper XIP, as powerful light can damage the display.

Standing the fixture on a flat surface

The fixture can be placed on a hard, fixed, flat horizontal surface provided that there is no risk that it may cause an obstruction or be knocked over. Ensure that the surface can safely bear the weight of all items that it will support, including any dynamic loads.

If you install the fixture in a location where it may cause injury or damage if it falls, secure it as directed in this chapter with a securely anchored safety cable.

Mounting the fixture on a truss

The fixture can be clamped to a truss or similar rigging structure in any orientation. Use half-coupler type clamps (see illustration on right) that completely encircle the truss chord or tubular support.

Half-coupler clamp

If installing the fixture outdoors, mount it so that the connections panel does not face upwards. Ensure that cables arrive from below the fixture, creating ‘drip loops’ in cables if necessary. Check that all rigging hardware is suitable for outdoor use.

To clamp the fixture to a truss:

1. Check that the rigging structure can support at least six times (or more if required by local regulations) the weight of all fixtures and equipment to be installed on it.
2. Block access under the work area.
3. The fixture is supplied with two omega-type brackets. Bolt a half-coupler type rigging clamp that is in perfect condition and approved for the weight that it will support securely to the each bracket. Use M12, grade 8.8 steel minimum bolts with self-locking nuts.
4. Fasten the two omega brackets complete with rigging clamps to the base of the fixture by locking each bracket’s quarter-turn fasteners into two of the receptacles (see **B** in illustration below) in the base of the fixture. The brackets must be spaced evenly. Turn quarter-turn fasteners a full 90° to lock them as shown on right.

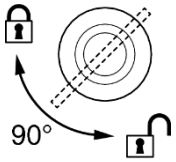

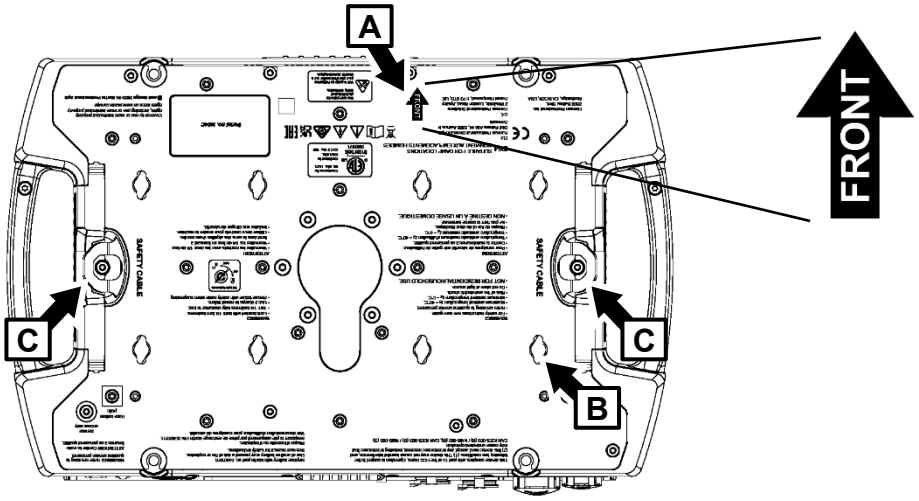

5. Note the position of the arrow marked **FRONT** (see **A** in illustration above). Working from a stable platform, hang the fixture on the truss and fasten the two rigging clamps onto the truss with FRONT pointing towards the main area to be illuminated.
6. Secure the fixture with a safety cable as directed below.
7. Make sure that there is no possibility of the head colliding with other fixtures or objects when it moves through its full pan and tilt ranges.

Securing with a safety cable

1. Obtain a safety cable that is approved for the weight of the fixture.
2. Fasten the cable to one of the safety cable attachment points in the base of the fixture (see **C** in illustration on previous page) by either looping it around or fastening a carabiner clip to the attachment point. Do not use one of the fixture’s carrying handles as the attachment point for the safety cable.

3. Remove as much slack as possible from the safety cable (by looping the cable around the truss chord, for example) and fasten it to a secure anchoring point.
4. Make sure that the safety cable will hold the fixture if a primary attachment fails.

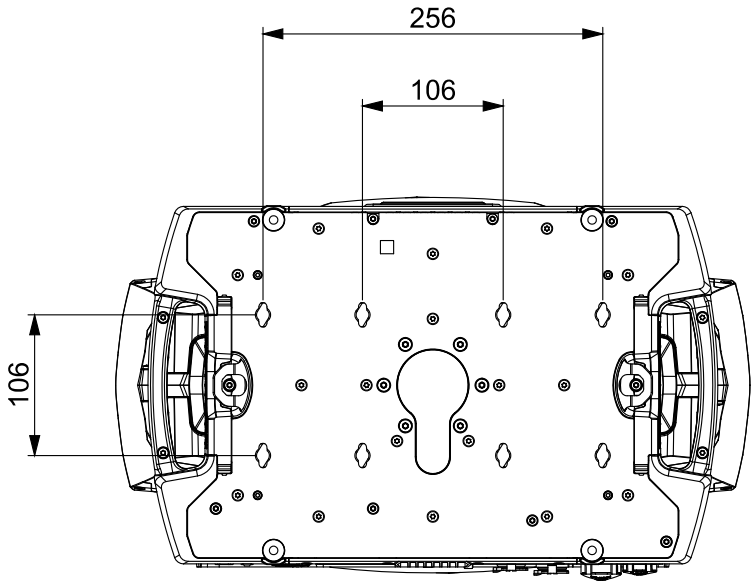

Quarter-turn receptacles in base

AC mains power

Warning! Read 'Safety information' on page 4 before connecting the fixture to AC mains power.

The fixture has an auto-ranging power supply that accepts AC mains power at 100-240 V at 50/60 Hz. Do not apply AC mains power at any other voltage or frequency to the fixture.

The fixture's maximum current draw is as follows:

• At 100-120 V~: 11.0 A

• At 200-240 V~: 5.2 A

Typical half-cycle RMS inrush current: 17.0 A at 230 V, 50 Hz.

Typical earth-leakage current: 0.7 mA.

The fixture requires a power input cable with an IP65-rated Neutrik powerCON TRUE1 NAC3FX-W (TOP) or equivalent female cable connector for AC mains power input. The cable must meet the requirements listed under "Protection from electric shock" on page 5. Martin can supply suitable input cables with connectors 1.5 m (4.9 ft.) or 5 m (16.4 ft.) long, as well as loose input connectors (see the Martin website at www.martin.com).

The fixture can be hard-wired to a building electrical installation if you want to install it permanently. Alternatively, you can connect it to local power outlets if you install a suitable power plug on the power input cable. When installing a power plug, follow the plug manufacturer's instructions and connect the wires in the power cable following the color coding guide in the table below:

	Live or L	**Neutral or N**	**Earth, Ground or ⏚**
US system	Black	White	Green
EU system	Brown	Blue	Yellow/green

If you need to install a Neutrik powerCON TRUE1 (TOP) or equivalent IP65-rated connector on a power cable, follow the connector manufacturer's instructions (normally published on the manufacturer's website or included with the product), respecting the color coding guide above.

Linking fixtures to power in a chain at 100-120 V

If you are supplying the fixture with AC mains power at 100-120 V, do not connect any other MAC Viper XIP fixture to the mains power OUT/THRU socket on the fixture's connections panel. Do not connect any device to the mains power OUT/THRU that draws a current of more than 5 A.

Linking fixtures to power in a chain at 200-240 V

If you are supplying the fixture with AC mains power at 200-240 V, you can connect up to three (3) fixtures in total to mains power in a linked daisy chain as follows:

1. Obtain a 12 AWG / 2.5 mm2 power input cable and 12 AWG / 2.5 mm2 power relay cables (available from Martin – see the Martin website at www.martin.com).
2. Relay mains power from one fixture to another by connecting fixtures to power in a linked daisy-chain, mains power OUT/THRU socket to mains power IN socket. This daisy-chain may contain up to a maximum of three (3) fixtures total.

If you are supplying a fixture with AC mains power at 200-240 V, do not connect any device – or chain of devices – that draws a current of more than 10.8 A to the mains power OUT/THRU socket of that first fixture.

If you connect three fixtures to power in a daisy-chain, we recommend that you draw power from a circuit that is protected by a type C MCB (Miniature Circuit Breaker). This will avoid the breaker tripping unnecessarily due to inrush current.

Connecting to power

Connect the fixture to AC mains power by lining up the keys in the IP65 power input cable connector with the keyways in the mains power IN connector in the connections panel, inserting the connector and twisting clockwise. Twist the cable connector counterclockwise and remove it from the connections panel to disconnect.

The mains power connectors support hot-plugging, but it is still good practice to shut down power to the power input cable before connecting to or disconnecting from the fixture if you can do this without inconvenience.

The fixture does not have an on/off switch. It becomes active as soon as power is applied at the power input connector. Be prepared for the head to move suddenly and for the fixture to emit bright light as soon as power is applied.

Data connections

See the MAC Viper XIP User Manual available for download from www.martin.com for full details of connecting the fixture to control data.

Use shielded twisted-pair Ethernet cable of type S/UTP, SF/UTP, S/STP or SF/STP only for the data link. The cable must be rated Cat 5e or better. The cable shield must be electrically connected to connector housings, and the other devices on the data link must also support shielded connections.

Service and maintenance

Warning! Read ‘Safety information’ on page 4 before servicing the fixture.

Refer any service or repair operation not described in this manual or in the fixture’s User Manual to an authorized Martin service technician. Do not try to carry out such an operation yourself, as doing so may present a health or safety risk. It may also cause damage or malfunction, and it may void your product warranty. The LED light source is not user-replaceable.

Installation, on-site service and maintenance can be provided worldwide by the Martin Professional Global Service organization and its approved agents, giving owners access to Martin’s expertise and product knowledge in a partnership that will ensure the highest level of performance throughout the product’s lifetime. Please contact your Martin supplier for details.

The user must clean the MAC Viper XIP periodically to maintain optimum performance and cooling, removing air filters from the head and base as described in this chapter for inspection and cleaning. The user may replace the fixture’s 3-volt lithium battery as described in this chapter. The user may upload firmware (fixture software) via the fixture’s DMX data input port, Ethernet port or USB-C port using firmware from Martin and instructions in the fixture’s User Manual (available for download from the Martin website at www.martin.com). The user may also install custom gobos as directed in the fixture’s User Manual. Finally, the user may install or uninstall an optional wireless DMX accessory that fits onto the fixture’s USB port following instructions from Martin. All other service operations on the MAC Viper XIP must be carried out by Martin, its approved service agents or trained and qualified personnel using the official Martin service documentation for the MAC Viper XIP.

It is Martin policy to apply the strictest possible calibration procedures and use the best quality materials available to ensure optimum performance and the longest possible component lifetimes. However, optical components are subject to wear and tear over the life of the product, resulting in gradual changes in color over many thousands of hours of use. The extent of wear and tear depends heavily on operating conditions and environment, so it is impossible to specify precisely whether and to what extent performance will be affected. However, you may eventually need to replace optical components if their characteristics are affected by wear and tear after an extended period of use and if you require fixtures to perform within very precise optical and color parameters.

Service mode

Pressing MENU and ENTER buttons immediately when the fixture name appears in the display while powering the fixture on puts the fixture into service mode, in which pan and tilt motors are deactivated and SERV appears in the display. To take the fixture out of service mode, power off and then power on again normally.

The MAC Viper XIP User Guide (available for download from the MAC Viper XIP page on www.martin.com) gives full details of the menus in the fixture’s control panel.

Cleaning

Important! Excessive dust, smoke fluid, and particle buildup degrades performance, causes overheating and will damage the fixture. Damage caused by inadequate cleaning or maintenance is not covered by the product warranty.

At regular intervals, the front glass must be cleaned to optimize light output and air filters must be removed for inspection and cleaning. Cleaning schedules for lighting fixtures vary greatly depending on the operating environment. It is therefore impossible to specify precise cleaning intervals for the fixture. Environmental factors that may result in a need for frequent cleaning include:

- Use of smoke or fog machines.
- High airflow rates (near air conditioning vents, for example).
- Presence of cigarette smoke.
- Airborne dust (from stage effects, building structures and fittings or the natural environment at outdoor events, for example).

If one or more of these factors is present, inspect fixtures within their first 100 hours of operation to see whether cleaning is necessary. Check again at frequent intervals. This procedure will allow you to assess cleaning requirements in your particular situation. If in doubt, consult your Martin dealer about a suitable maintenance schedule.

Use gentle pressure only when cleaning, and work in a clean, well-lit area. Do not use any product that contains solvents or abrasives, as these can cause surface damage.

To clean the fixture:

1. Disconnect the fixture from power and allow it to cool for at least 15 minutes.
2. Vacuum or gently blow away dust and loose particles from the outside of the fixture and air vents with low-pressure compressed air. Holding cooling fan blades stationary with a screwdriver will protect them from spinning too fast and possibly being damaged when you apply a vacuum or air jet.
3. Clean surfaces using warm water with a little detergent and a soft cloth, sponge or soft brush of the type used for washing cars. Do not rub glass surfaces hard: lift particles off with a soft repeated press. Dry with a soft, clean, lint-free cloth or low-pressure compressed air. Remove stuck particles with an unscented tissue or cotton swab moistened with glass cleaner or distilled water.
4. Wipe the fixture with a soft, dry cloth after cleaning. We recommend that you apply power to the fixture for a short time, which will allow it to warm up slightly and dry out completely, before putting it into storage.

Cleaning air filters

The MAC Viper XIP has two wire gauze air filters in the head (one on either side of the head) and two wire gauze air filters in the base. When using the fixture in dusty conditions we recommend the use of head air filters with paper elements. These are available as accessories in sets of 12 from Martin suppliers by ordering P/N 50400765.

Head air filters

To service the head air filters:

1. Disconnect the fixture from power and allow to cool for 30 minutes.
2. Position the head pointing upwards so that the head air filter covers are accessible.
3. See illustrations below. Release the latches (arrowed) and remove the two head air filter covers, one on each side of the head. Remove the air filters from their recesses in the head.

4. Dispose of paper air filters. Do not try to clean or re-use a paper air filter. Clean metal air filters with a soft brush and vacuum cleaner or compressed air, taking care to avoid damaging the filter mesh. If metal filters are greasy, you can clean them in a household dishwasher at maximum 50° C (122° F), short cycle recommended. Dry them completely before reinstalling. The metal filter is designed to be re-used, but replace it with a new item if it is not in clean, undamaged condition after cleaning.
5. Place the clean air filters into their recesses in the head, making sure that there is no gap for air to pass around the edges of the filter.
6. Hook the rear end of each filter cover into the head and push the front end into the head until its clip engages fully. Check that the covers are held securely and cannot fall out of the head.

Base air filters

To service the base air filters:

1. See illustrations below. For each of the two air filters, push on the air filter cover retaining clips (arrowed) to release them, then remove the filter from the base.

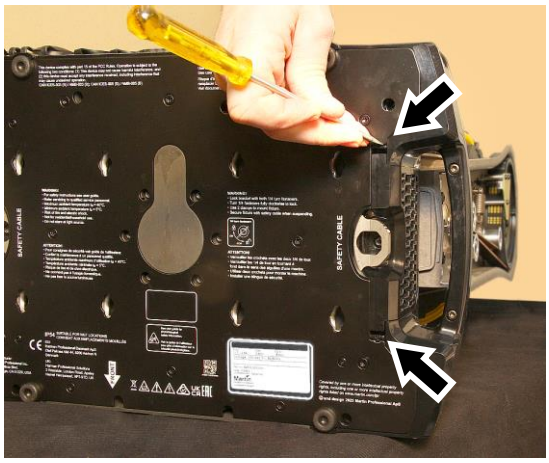

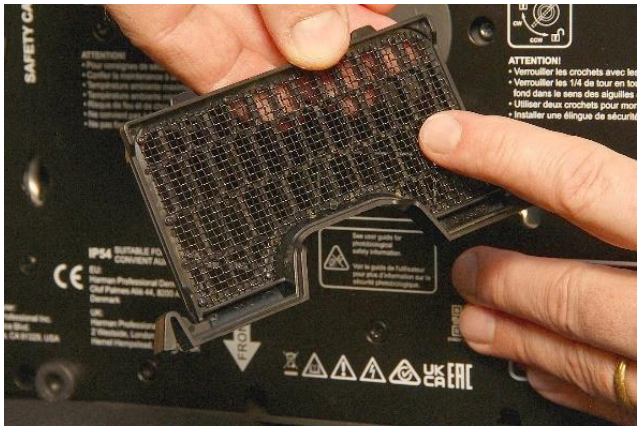

2. Remove dust from each filter with a soft brush and/or low-pressure compressed air. Remove grease with warm soapy water. You can clean the filters in a household dishwasher at maximum 50° C (122° F), short cycle recommended.
3. Dry each filter carefully, then push it back into its recess in the base until both retaining clips lock into place. Make sure that the filter is held securely.

Battery replacement

Warning! Disconnect the fixture from AC power before replacing its battery. Do not attempt to recharge the battery, or you may create a risk of fire or explosion.

The MAC Viper XIP has a non-rechargeable 3-volt lithium battery that provides power to the control panel and display when the fixture is not connected to AC mains power. If the battery runs flat, you must replace it. Do not attempt to recharge it.

The battery is located behind a cover in the USB port / battery compartment next to the control panel on the base of the fixture. If a wireless DMX module accessory is installed, the battery is behind this module.

To replace the battery:

1. Order Martin P/N 05801011 (CR123A, 3 V lithium battery).
2. Disconnect the fixture from AC mains power and allow to cool.
3. See illustration on right. Remove the two Torx10 screws from their holes (arrowed) in the black USB port / battery compartment cover.
4. Carefully lever the cover off the fixture base with a flathead screwdriver. Take care not to damage seals.

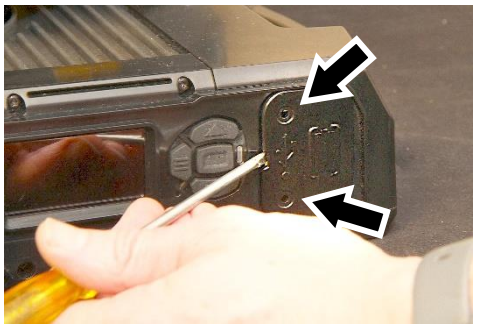

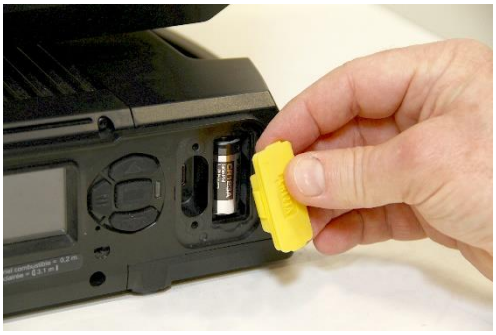

5. See illustration on right. The battery is located behind a yellow rubber cover. Pull the yellow cover off the battery compartment and remove the used battery.
6. Insert the new CR123A battery, respecting the correct battery polarity (positive terminal facing upwards, towards the head).
7. Reinstall the yellow rubber cover over the battery compartment. Check the condition of the seal on the black cover (or the wireless DMX module, if used) that fits over the USB port / battery compartment. The seal must be in perfect condition. If not, contact your Martin supplier for a replacement. Install the cover (or module), fastening it in position with its two screws. Check that it is closed securely before reapplying power.
8. Dispose of the used battery responsibly: send to an authorized waste recycling and disposal center.

Installing a Universal Connect Module Accessory

The MAC Viper XIP User Manual available for download from the Martin website at www.martin.com contains instructions for installing a wireless Universal Connect Module accessory.

Lubrication

The MAC Viper XIP does not require lubrication under normal circumstances. Moving parts can be checked and a long-lasting Teflon-based grease reapplied by a Martin service partner if necessary.

Seal care

The yellow rubber seals, particularly on the fixture's head, can become sticky over time. This can make covers difficult to remove and you can risk displacing or deforming seals during cover removal. To make service easier and protect the seals, apply a very thin film of silicone grease to them. Apply just enough grease to act as a release agent and wipe off any excess. The grease should hardly be visible when it is correctly applied.

Specifications

For full product specifications, see the MAC Viper XIP area of the Martin website at www.martin.com

FCC compliance

This equipment has been tested and found to comply with the limits for a Class B digital device, pursuant to part 15 of the FCC Rules. These limits are designed to provide reasonable protection against harmful interference in a residential installation. This equipment generates, uses and can radiate radio frequency energy and, if not installed and used in accordance with the instructions, may cause harmful interference to radio communications. However, there is no guarantee that interference will not occur in a particular installation. If this equipment does cause harmful interference to radio or television reception, which can be determined by turning the equipment off and on, the user is encouraged to try to correct the interference by one or more of the following measures:

- Reorient or relocate the receiving antenna.
- Increase the separation between the equipment and receiver.
- Connect the equipment into an outlet on a circuit different from that to which the receiver is connected.
- Consult the dealer or an experienced radio/TV technician for help.

FCC supplier's declaration of conformity declaration

This device complies with part 15 of the FCC Rules. Operation is subject to the following two conditions:

- This device may not cause harmful interference.
- This device must accept any interference received, including interference that may cause undesired operation.

Canadian Interference-Causing Equipment Regulations – Règlement sur le Matériel Brouilleur du Canada

This Class B digital apparatus meets all requirements of the Canadian Interference-Causing Equipment Regulations.*Cet appareil numérique de la classe B respecte toutes les exigences du Règlement sur le Matériel Brouilleur du Canada.*

CAN ICES (B) / NMB (B)

EU Declaration of Conformity

Harman Professional, Inc. hereby declares that the equipment type MAC Viper XIP complies with the following: European Union Restriction of Hazardous Substances Recast (RoHS2) Directive 2011/65/EU and as amended by 2015/863; European Radio Equipment Directive (RED) 2014/53/EU.

Type: NFC tag

Frequency: 13.56 MHz

The full text of the EU Declaration of Conformity covering this product is available for download from the MAC Viper XIP product area of the Martin website at www.martin.com.

Conditional connection

For conformity with mains voltage fluctuations and flicker according to EN61000-3-11 during extensive use of continuous strobe effects the user must determine, in consultation with the mains power supply authority if necessary, that the equipment is connected to a supply impedance of less than 0.39 ohms at 50 Hz.

Disposing of this product

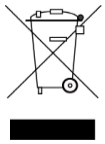

Martin products are supplied in compliance with Directive 2012/19/EC of the European Parliament and of the Council of the European Union on WEEE (Waste Electrical and Electronic Equipment), where applicable.

Help preserve the environment! Ensure that this product is recycled at the end of its life. Your supplier can give details of local arrangements for the disposal of Martin products

Martin®

www.martin.com