ELP CL IP

COLOR LED ELLIPSOIDAL LIGHT FIXTURE – IP65 RATED

SPEC SHEET

HIGHLIGHTS

- **Impressive light output and CRI rating**
  Class-leading 6,900 lumen output rating (High Output mode) and 90 CRI rating (High Quality mode)
- **Revolutionary focus and functionality**
  Industry's first gear-driven Fine Focus, Fast Focus for data-free focusing and more
- **Compatible with universal accessories**
  Use industry standard lens tubes, gel frames, gobo holders and rotators
- **IP65 Rated**
  Offers water resistance and complete dust protection for temporary outdoor applications

OVERVIEW

Martin ELP CL IP (Color) LED ellipsoid fixtures deliver class-leading luminance, output and great color mixing from pastels to saturated colors. Ergonomic Danish engineering offers advances in lighting functionality that include the easy-to-use gear-based Fine Focus—an industry first—and on-board Fast Focus, which allows focusing of the fixture without the need of DMX data. ELP also offers 16-bit dimming with 4 selectable curves and 26 color presets that match industry-standard color filters.

ELP fixtures can be configured in black or white with one of four Martin fixed lens tubes (19°, 26°, 36° or 50° beam angles) or one of two Martin zoom lens tubes (15–30° or 25–50° beam angles). ELP fixtures are also compatible with third-party lens tubes and a wide range of accessories, including gel frames and gobos for flexibility in lighting design and inventory management.

The ELP CL IP is designed to withstand the elements in temporary outdoor environments, with an IP65 rating for water resistance and dust protection, and C3 corrosion resistance for improved durability.

Superior output, optics and quality, combined with unparalleled ease-of-use and convenience, make Martin ELP the leading LED ellipsoidal fixtures in their class.

Martin recommends using official Martin-branded ELP accessories for the highest possible performance. While we strive to ensure compatibility with third-party accessories, we cannot guarantee optimal performance and recommend that the user makes an evaluation of such an accessory before purchasing.

KEY MESSAGES

ADVANCED MARTIN OPTICS

Martin ELP ellipsoids feature optic assemblies designed in Denmark by the technology innovators behind MAC Encore, the leading LED moving light. The ELP is designed to maximize efficiency and deliver a flat field of illumination for smoother blending and mixing between fixtures.

CUTTING-EDGE LED TECHNOLOGY

ELP CL IP offers an impressive 6,900 lumens and 85 CRI in High Output mode, and 5,900 lumens and 90 CRI in High Quality mode, with a color temperature of 6,000K (open white). ELP ellipsoids also offer flicker-free operation for consistent light output—on and off camera—and 16-bit dimming with 4 selectable curves.

FOCUS ON FUNCTIONALITY

ELP takes a classic light fixture to new performance levels with a suite of innovative features. Our gear-based Fine Focus adjustment—an industry first—lets you lock focus exactly where you want it, instantly. There's no refocusing, no drifting and no slipping. Our innovative Fast Focus feature brings the fixture to full output for 60 seconds without data running to the fixture. Halation color correction removes atypical blue and brown halos when using Martin lens tubes. And with an IP65 rating and C3 corrosion resistance, ELP CL IP was designed to withstand operation in temporary outdoor environments.

ERGONOMIC DESIGN

Danish engineering is all about efficiency and ergonomics, and the subtle details of ELP are no exception: We've placed the center of gravity as close to the yoke as possible, for more comfortable operation. And, we've placed tilt knobs out of the way of framing shutters, to allow quick, easy position adjustments.

INVEST IN THE FUTURE, WITH A MINIMAL FINANCIAL INVESTMENT

It has never been easier to transition your inventory to LED ellipsoidals. In addition to the six lens tube configurations available through Martin, the ELP line fits common third-party lens tubes and accessories—which means you can save money by using your existing gel frames, gobo holders and rotators and lens tubes.

HARMAN PROFESSIONAL INC. • 8500 BALBOA BOULEVARD • NORTHRIDGE • CA 91329 • USA • +1 818 893 8411

©2020 HARMAN Professional. All rights reserved. Martin® is a registered trademark of HARMAN Professional Inc. registered in the United States and/or other countries.
Features, specifications, and appearance are subject to change without notice. Rev. 202003

ELP CL IP

COLOR LED ELLIPSOIDAL LIGHT FIXTURE – IP65 RATED

SPEC SHEET

FEATURES

- Color mixing ellipsoidal fixture based on 91 LEDs (RGBLA)
- Flat, even field with broad color spectrum
- Outputs 6,900 lumens (in High Output mode)
- CRI rating of 90 (in High Quality mode)
- Flicker-free operation with adjustable Pulse Width Modulation
- 16-bit dimming with 4 selectable curves
- 26 color presets that match industry-standard color filters
- Gear-driven Fine Focus for one-hand operation
- On-board Fast Focus for focusing without the need of DMX data
- On-board stand-alone programming with up to 20 scenes
- Up to 9 fixtures can be linked via PowerCon Thru connector
- High-resolution OLED display for easy on-board setting and configuration
- Four available Martin fixed lens tubes (19°, 26°, 36° and 50° beam angles) and two available Martin zoom lens tubes (15–30° and 25–50° beam angles)
- Compatible with universal accessories—use existing lens tubes, gel frames, gobo holders and rotators
- IP65 Rated for water resistance and dust protection

ORDERING INFORMATION

BODY & LENS TUBES

- Martin ELP CL IP (Body Only): P/N 9045122814
- Martin ELP CL IP (Body Only), White: P/N 9045122816
- Martin ELP Lens Tube 19°: P/N 9045107782
- Martin ELP Lens Tube 19°, White: P/N 9045115166
- Martin ELP Lens Tube 26°: P/N 9045107783
- Martin ELP Lens Tube 26°, White: P/N 9045115167
- Martin ELP Lens Tube 36°: P/N 9045107784
- Martin ELP Lens Tube 36°, White: P/N 9045115168
- Martin ELP Lens Tube 50°: P/N 9045107785
- Martin ELP Lens Tube 50°, White: P/N 9045115170
- Martin ELP Zoom Lens Tube 15–30°: P/N 9045121618
- Martin ELP Zoom Lens Tube 15–30°, White: P/N 9045122108
- Martin ELP Zoom Lens Tube 25–50°: P/N 9045121619
- Martin ELP Zoom Lens Tube 25–50°, White: P/N 9045122109

RELATED ITEMS

- Martin RDM 5.5 Splitter: P/N 90758150
- Martin Companion Cable: P/N 91616091

ACCESSORIES

Power Input Cables (16 A)*

- Power Input Cable, H07RN-F, 2.5 mm², bare ends to TRUE1 NAC3FX-W (female), 1.5 m (4.9 ft.) P/N 91611797
- Power Input Cable, H07RN-F, 2.5 mm², bare ends to TRUE1 NAC3FX-W (female), 5 m (16.4 ft.) P/N 91611786
- Power Input Cable, SJOOW, 12 AWG, bare ends to TRUE1 NAC3FX-W (female), 1.5 m (4.9 ft.) P/N 91610173
- Power Input Cable, SJOOW, 12 AWG, bare ends to TRUE1 NAC3FX-W (female), 5 m (16.4 ft.) P/N 91610174

Power Relay Cables*

- Power Relay Cable, H07RN-F, 2.5 mm², TRUE1-TRUE1 0.45 m (1.5 ft.) P/N 91611784
- Power Relay Cable, H07RN-F, 2.5 mm², TRUE1-TRUE1 1.2 m (3.9 ft.) P/N 91611785
- Power Relay Cable, H07RN-F, 2.5 mm², TRUE1-TRUE1 2.5 m (8.2 ft.) P/N 91611796
- Power Relay Cable, SJOOW, 12 AWG, TRUE1-TRUE1, 0.45 m (1.5 ft.) P/N 91610170
- Power Relay Cable, SJOOW, 12 AWG, TRUE1-TRUE1, 1.2 m (3.9 ft.) P/N 91610171
- Power Relay Cable, SJOOW, 12 AWG, TRUE1-TRUE1, 2.5 m (8.2 ft.) P/N 91610172

Power Connectors*

- Neutrik PowerCON TRUE1 NAC3MX-W (male) P/N 91611788HU
- Neutrik PowerCON TRUE1 NAC3FX-W (female) P/N 91611789HU

**All TRUE1 connectors are IP65-rated TOP type*

Spare Parts

- Pressure Relief Valve with Gore membrane, M12 x 1.5 P/N 5127883-00

HARMAN PROFESSIONAL INC. • 8500 BALBOA BOULEVARD • NORTHRIDGE • CA 91329 • USA • +1 818 893 8411

©2020 HARMAN Professional. All rights reserved. Martin® is a registered trademark of HARMAN Professional Inc. registered in the United States and/or other countries.
Features, specifications, and appearance are subject to change without notice. Rev. 202003

ELP CL IP

COLOR LED ELLIPSOIDAL LIGHT FIXTURE – IP65 RATED

SPEC SHEET

TECHNICAL SPECIFICATIONS

DYNAMIC EFFECTS

Color mixing	RGBLA
Color temperature range	2000–10000K
Color selection	26 color presets
Electronic dimming	0–100%
Strobe and pulse effect	Variable speed and action, random strobe
Electronic 'shutter' effect	Instant open and blackout
Electronic dimming	Four dimming curve options

CONTROL & PROGRAMMING

DMX channels	1/10/17
16-bit control	Intensity, CTC, RGBLA
Control options	DMX, stand-alone
PWM	600–2400 Hz
Setting and addressing	Control panel with OLED display or via RDM
Stand-alone programming	Control panel with OLED display
DMX compliance	USITT DMX512-A
RDM compliance	ANSI/ESTA E1.20
Transceiver	Opto-isolated RS-485

OPTICS

Light source	91 x RGBAL Luxeon Rebel LEDs (19 Red, 24 Green, 12 Blue, 24 Lime, 12 Amber)
Color temperature	2000–10000K
Fixed Lens Tube Options	19°, 26°, 36° and 50°
Zoom Lens Tube Options	15–30° and 25–50°
Minimum LED lifetime	30 000 hours (to >70% luminous output)*

**Figure obtained under manufacturer's test conditions.*

PHOTOMETRIC DATA (HIGH QUALITY MODE @ 6000K)

Light Engine luminous output	20000 lumen
Fixture luminous output	5900 lumen
CRI (Color Rendering Index)	>90
CQS (Color Quality Scale)	>87
TM-30 Rf (IES TM-30-15 Fidelity Index)	>84
TM-30 Rg (IES TM-30-15 Gamut Index)	>106
TLCI (Television Lighting Consistency Index)	>87

PHOTOMETRIC DATA (HIGH OUTPUT MODE @ 5500K)

Light Engine luminous output	20000 lumen
Fixture luminous output	6900 lumen
CRI (Color Rendering Index)	>85
CQS (Color Quality Scale)	>90
TM-30 Rf (IES TM-30-15 Fidelity Index)	>84
TM-30 Rg (IES TM-30-15 Gamut Index)	>111
TLCI (Television Lighting Consistency Index)	>85

CONSTRUCTION

Color(s)	Black or white variant
Housing	Die-cast aluminum
Protection rating	IP65

GOBOS & COLOR FRAME

Gobo size	A size, 100 mm OD, 75 mm image*
Gobo size	B size, 86 mm OD, 64.5 mm image*
Color frame size	159 x 159 mm (6.25 in. x 6.25 in.)

**Gobo holder not included.*

INSTALLATION

Mounting	Adjustable bracket
Location	Indoor, outdoor use, suitable for wet locations
Orientation	Any
Minimum distance to combustible materials	0.2 m (0.7 ft.)
Minimum distance to illuminated surfaces	0.5 m (1.6 ft.)

CONNECTIONS

AC power in/thru	IP65-rated Neutrik PowerCON TRUE1 TOP
DMX & RDM data in/thru	IP65-rated 5-pin XLR

ELECTRICAL

AC power	100–240 V nominal, 50/60 Hz
Power supply unit	Auto-ranging electronic switch-mode
Idle power (zero intensity)	5 W
Half-cycle RMS inrush current at 230 V, 50 Hz	18.0 A
Fixture link via PowerCON at 100-120 V	Up to 4 fixtures
Fixture link via PowerCON at 200-240 V	Up to 9 fixtures

Power consumption figures are typical, not maximum. Allow for +/-10% variation.

TYPICAL POWER AND CURRENT

110 V, 60 Hz	2.4 A, 259 W, PF 0.99
208 V, 60 Hz	1.3 A, 250 W, PF 0.96
230 V, 50 Hz	1.3 A, 249 W, PF 0.95
240 V, 50 Hz	1.1 A, 249 W, PF 0.95

Measurements made at nominal voltage with all LEDs at full intensity. Allow for a deviation of +/- 10%.

THERMAL

Cooling	Forced air (temperature-regulated, low noise)
Maximum ambient temperature (Ta max.)	40° C (104° F)
Minimum ambient temperature (Ta min.)	0° C (32° F)
Total heat dissipation (calculated, +/- 10%, at full intensity, full white)	1000 BTU/hr.

APPROVALS

Global CB Certification/IECEE	IEC 60598-2-17 (IEC 60598-1)
EU safety	EN 60598-2-17 (EN 60598-1), EN 62471, EN62493
EU EMC	EN 55015, EN 55032, EN 55035, EN 61000-3-2, EN 61000-3-3, EN 61547
US safety	UL 1573
US EMC	FCC Part 15 Class B
Canadian safety	CSA C22.2 No. 166
Canadian EMC	ICES-3 (B)/NMB-3 (B); ICES-5 (B)/NMB-5 (B)
Australia/NZ	RCM

INCLUDED ITEMS

Mounting bracket
User manual

HARMAN PROFESSIONAL INC. • 8500 BALBOA BOULEVARD • NORTHRIDGE • CA 91329 • USA • +1 818 893 8411

©2020 HARMAN Professional. All rights reserved. Martin® is a registered trademark of HARMAN Professional Inc. registered in the United States and/or other countries.
Features, specifications, and appearance are subject to change without notice. Rev. 202003

ELP CL IP

COLOR LED ELLIPSOIDAL LIGHT FIXTURE – IP65 RATED

SPEC SHEET

FIXED LENS PROJECTION DATA (HIGH OUTPUT MODE)

19° LENS TUBE

Center beam intensity: 78988 candela

Distance meter (ft.)	4 (13.1)	6 (19.7)	8 (26.2)	10 (32.8)	12 (39.4)	14 (45.9)	16 (52.5)	18 (59)	20 (65.6)
Field-angle diameter meter (ft.)	1.5 (4.91)	2.2 (7.4)	3.0 (9.8)	3.7 (12.3)	4.5 (14.7)	5.2 (17.2)	6.0 (19.6)	6.7 (22.1)	7.5 (24.6)
Center illuminance (lux)	4937	2194	1234	790	549	403	309	244	197
Center illuminance (candela)	459	204	115	73	51	37	29	23	18

For field diameter at any distance, multiply distance by 0.37

26° LENS TUBE

Center beam intensity: 57526 candela

Distance meter (ft.)	4 (13.1)	6 (19.7)	8 (26.2)	10 (32.8)	12 (39.4)	14 (45.9)	16 (52.5)	18 (59)	20 (65.6)
Field-angle diameter meter (ft.)	1.8 (5.8)	2.7 (8.8)	3.6 (11.7)	4.5 (14.6)	5.3 (17.5)	6.2 (20.4)	7.1 (23.4)	8.0 (26.3)	8.9 (29.2)
Center illuminance (lux)	3595	1598	899	575	399	294	225	178	144
Center illuminance (candela)	334	148	84	53	37	27	21	16	13

For field diameter at any distance, multiply distance by 0.45

36° LENS TUBE

Center beam intensity: 30439 candela

Distance meter (ft.)	4 (13.1)	6 (19.7)	8 (26.2)	10 (32.8)	12 (39.4)	14 (45.9)	16 (52.5)	18 (59)	20 (65.6)
Field-angle diameter meter (ft.)	2.6 (8.4)	3.9 (12.6)	5.1 (16.9)	6.4 (21.1)	7.7 (25.3)	9.0 (29.5)	10.3 (33.7)	11.6 (37.9)	12.8 (42.1)
Center illuminance (lux)	1902	846	476	304	211	155	119	94	76
Center illuminance (candela)	177	79	44	28	20	14	11	9	7

For field diameter at any distance, multiply distance by 0.64

50° LENS TUBE

Center beam intensity: 14666 candela

Distance meter (ft.)	4 (13.1)	6 (19.7)	8 (26.2)	10 (32.8)	12 (39.4)	14 (45.9)	16 (52.5)	18 (59)	20 (65.6)
Field-angle diameter meter (ft.)	3.9 (12.8)	5.8 (19.2)	7.8 (25.5)	9.7 (31.9)	11.7 (38.3)	13.6 (44.7)	15.6 (51.1)	17.5 (57.5)	19.5 (57.5)
Center illuminance (lux)	917	407	229	147	102	75	57	45	45
Center illuminance (candela)	85	38	21	14	9	7	5	4	4

For field diameter at any distance, multiply distance by 0.97

For center illuminance at any distance, divide center beam intensity with distance in square (meter for lux, feet for candela)

HARMAN PROFESSIONAL INC. • 8500 BALBOA BOULEVARD • NORTHRIDGE • CA 91329 • USA • +1 818 893 8411

©2020 HARMAN Professional. All rights reserved. Martin® is a registered trademark of HARMAN Professional Inc. registered in the United States and/or other countries.
Features, specifications, and appearance are subject to change without notice. Rev. 202003

ELP CL IP

COLOR LED ELLIPSOIDAL LIGHT FIXTURE – IP65 RATED

SPEC SHEET

FIXED LENS PROJECTION DATA (HIGH QUALITY MODE)

19° LENS TUBE

Center beam intensity: 66689 candela

Distance meter (ft.)	4 (13.1)	6 (19.7)	8 (26.2)	10 (32.8)	12 (39.4)	14 (45.9)	16 (52.5)	18 (59)	20 (65.6)
Field-angle diameter meter (ft.)	1.5 (4.9)	2.2 (7.4)	3.0 (9.8)	3.7 (12.3)	4.5 (14.7)	5.2 (17.2)	6.0 (19.6)	6.7 (22.1)	7.5 (63.9)
Center illuminance (lux)	4168	1852	1042	667	463	340	261	206	167
Center illuminance (candela)	387	172	97	62	43	32	24	19	15

For field diameter at any distance, multiply distance by 0.37

26° LENS TUBE

Center beam intensity: 48559 candela

Distance meter (ft.)	4 (13.1)	6 (19.7)	8 (26.2)	10 (32.8)	12 (39.4)	14 (45.9)	16 (52.5)	18 (59)	20 (65.6)
Field-angle diameter meter (ft.)	1.8 (5.8)	2.7 (8.8)	3.6 (11.7)	4.5 (14.6)	5.3 (17.5)	6.2 (20.4)	7.1 (23.4)	8.0 (26.3)	8.9 (29.2)
Center illuminance (lux)	3035	1349	759	486	337	248	190	150	121
Center illuminance (candela)	282	125	70	45	31	23	18	14	11

For field diameter at any distance, multiply distance by 0.45

36° LENS TUBE

Center beam intensity: 25554 candela

Distance meter (ft.)	4 (13.1)	6 (19.7)	8 (26.2)	10 (32.8)	12 (39.4)	14 (45.9)	16 (52.5)	18 (59)	20 (65.6)
Field-angle diameter meter (ft.)	2.6 (8.4)	3.9 (12.6)	5.1 (16.9)	6.4 (21.1)	7.7 (25.3)	9.0 (29.5)	10.3 (33.7)	11.6 (37.9)	12.8 (42.1)
Center illuminance (lux)	1597	710	399	256	177	130	100	79	64
Center illuminance (candela)	148	66	37	24	16	12	9	7	6

For field diameter at any distance, multiply distance by 0.64

50° LENS TUBE

Center beam intensity: 12393 candela

Distance meter (ft.)	4 (13.1)	6 (19.7)	8 (26.2)	10 (32.8)	12 (39.4)	14 (45.9)	16 (52.5)	18 (59)	20 (65.6)
Field-angle diameter meter (ft.)	3.9 (12.8)	5.8 (19.2)	7.8 (25.5)	9.7 (31.9)	11.7 (38.3)	13.6 (44.7)	15.6 (51.1)	17.5 (57.5)	19.5 (63.9)
Center illuminance (lux)	775	344	194	124	86	63	48	38	31
Center illuminance (candela)	72	32	18	12	8	6	4	4	3

For field diameter at any distance, multiply distance by 0.97

For center illuminance at any distance, divide center beam intensity with distance in square (meter for lux, feet for candela)

HARMAN PROFESSIONAL INC. • 8500 BALBOA BOULEVARD • NORTHRIDGE • CA 91329 • USA • +1 818 893 8411

©2020 HARMAN Professional. All rights reserved. Martin® is a registered trademark of HARMAN Professional Inc. registered in the United States and/or other countries.
Features, specifications, and appearance are subject to change without notice. Rev. 202003

ELP CL IP

COLOR LED ELLIPSOIDAL LIGHT FIXTURE – IP65 RATED

SPEC SHEET

ZOOM LENS PROJECTION DATA (HIGH OUTPUT MODE/15–30°)

15–30° ZOOM LENS TUBE

NARROW BEAM

Center beam intensity: 108890 candela

Distance meter (ft.)	4 (13.1)	6 (19.7)	8 (26.2)	10 (32.8)	12 (39.4)	14 (45.9)	16 (52.5)	18 (59)	20 (65.6)
Field-angle diameter meter (ft.)	1.2 (3.93)	1.8 (5.91)	2.4 (7.86)	3 (9.84)	3.6 (11.82)	4.2 (13.77)	4.8 (15.75)	5.4 (17.7)	6 (19.68)
Center illuminance (lux)	6806	3025	1701	1089	756	556	425	336	272
Center illuminance (candela)	632	281	158	101	70	52	40	31	25

For field diameter at any distance, multiply distance by 0.3

15–30° ZOOM LENS TUBE

MEDIUM BEAM

Center beam intensity: 61912 candela

Distance meter (ft.)	4 (13.1)	6 (19.7)	8 (26.2)	10 (32.8)	12 (39.4)	14 (45.9)	16 (52.5)	18 (59)	20 (65.6)
Field-angle diameter meter (ft.)	1.6 (5.24)	2.4 (7.88)	3.2 (10.48)	4 (13.12)	4.8 (15.76)	5.6 (18.36)	6.4 (21)	7.2 (23.6)	8 (26.24)
Center illuminance (lux)	3869	1720	967	619	430	316	242	191	155
Center illuminance (candela)	360	160	90	58	40	29	23	18	14

For field diameter at any distance, multiply distance by 0.4

15–30° ZOOM LENS TUBE

WIDE BEAM

Center beam intensity: 39550 candela

Distance meter (ft.)	4 (13.1)	6 (19.7)	8 (26.2)	10 (32.8)	12 (39.4)	14 (45.9)	16 (52.5)	18 (59)	20 (65.6)
Field-angle diameter meter (ft.)	2 (6.55)	3 (9.85)	4 (13.1)	5 (16.4)	6 (19.7)	7 (22.95)	8 (26.25)	9 (29.5)	10 (32.8)
Center illuminance (lux)	2472	1099	618	395	275	202	154	122	99
Center illuminance (candela)	230	102	57	37	26	19	14	11	9

For field diameter at any distance, multiply distance by 0.5

For center illuminance at any distance, divide center beam intensity with distance in square (meter for lux, feet for candela)

HARMAN PROFESSIONAL INC. • 8500 BALBOA BOULEVARD • NORTHRIDGE • CA 91329 • USA • +1 818 893 8411

©2020 HARMAN Professional. All rights reserved. Martin® is a registered trademark of HARMAN Professional Inc. registered in the United States and/or other countries.
Features, specifications, and appearance are subject to change without notice. Rev. 202003

ELP CL IP

COLOR LED ELLIPSOIDAL LIGHT FIXTURE – IP65 RATED

SPEC SHEET

ZOOM LENS PROJECTION DATA (HIGH OUTPUT MODE/25–50°)

25–50° ZOOM LENS TUBE

NARROW BEAM

Center beam intensity: 62561 candela

Distance meter (ft.)	4 (13.1)	6 (19.7)	8 (26.2)	10 (32.8)	12 (39.4)	14 (45.9)	16 (52.5)	18 (59)	20 (65.6)
Field-angle diameter meter (ft.)	1.6 (5.24)	2.4 (7.88)	3.2 (10.48)	4 (13.12)	4.8 (15.76)	5.6 (18.36)	6.4 (21)	7.2 (23.6)	8 (26.24)
Center illuminance (lux)	3910	1738	978	626	434	319	244	193	156
Center illuminance (candela)	363	161	91	58	40	30	23	18	15

For field diameter at any distance, multiply distance by 0.4

25–50° ZOOM LENS TUBE

MEDIUM BEAM

Center beam intensity: 40507 candela

Distance meter (ft.)	4 (13.1)	6 (19.7)	8 (26.2)	10 (32.8)	12 (39.4)	14 (45.9)	16 (52.5)	18 (59)	20 (65.6)
Field-angle diameter meter (ft.)	2 (6.55)	3 (9.85)	4 (13.1)	5 (16.4)	6 (19.7)	7 (22.95)	8 (26.25)	9 (29.5)	10 (32.8)
Center illuminance (lux)	2532	1125	633	405	281	207	158	125	101
Center illuminance (candela)	235	105	59	38	26	19	15	12	9

For field diameter at any distance, multiply distance by 0.5

25–50° ZOOM LENS TUBE

WIDE BEAM

Center beam intensity: 23981 candela

Distance meter (ft.)	4 (13.1)	6 (19.7)	8 (26.2)	10 (32.8)	12 (39.4)	14 (45.9)	16 (52.5)	18 (59)	20 (65.6)
Field-angle diameter meter (ft.)	2.8 (9.17)	4.2 (13.79)	5.6 (18.34)	7 (22.96)	8.4 (27.58)	9.8 (32.13)	11.2 (36.75)	12.6 (41.3)	14 (45.92)
Center illuminance (lux)	1499	666	375	240	167	122	94	74	60
Center illuminance (candela)	139	62	35	22	16	11	9	7	6

For field diameter at any distance, multiply distance by 0.7

For center illuminance at any distance, divide center beam intensity with distance in square (meter for lux, feet for candela)

HARMAN PROFESSIONAL INC. • 8500 BALBOA BOULEVARD • NORTHRIDGE • CA 91329 • USA • +1 818 893 8411

©2020 HARMAN Professional. All rights reserved. Martin® is a registered trademark of HARMAN Professional Inc. registered in the United States and/or other countries.
Features, specifications, and appearance are subject to change without notice. Rev. 202003

ELP CL IP

COLOR LED ELLIPSOIDAL LIGHT FIXTURE – IP65 RATED

SPEC SHEET

DIMENSIONS (BODY & FIXED LENSES)

PHYSICAL

Length ..... 644 mm (25.4 in.)
Width ..... 255 mm (10.1 in.)
Height ..... 255 mm (10.1 in.)
Height (with bracket) ..... 527 mm (20.1 in.)
Weight ..... 12.2 kg (26.9 lb.)

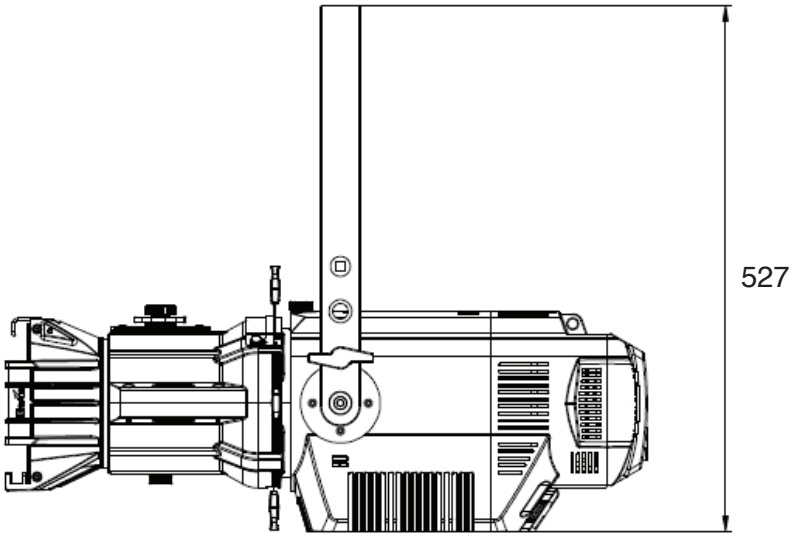

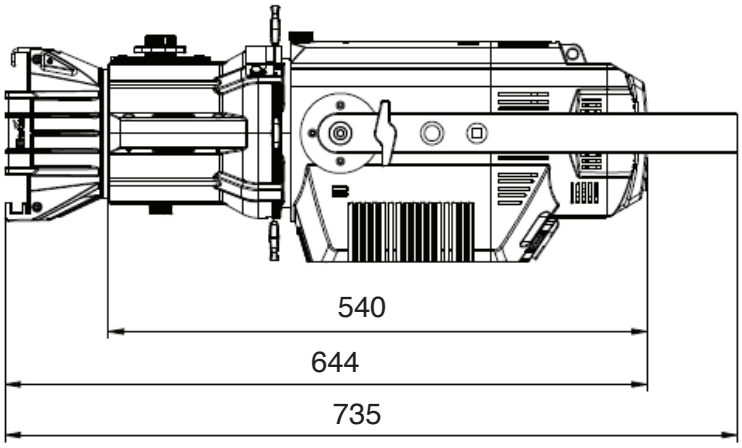

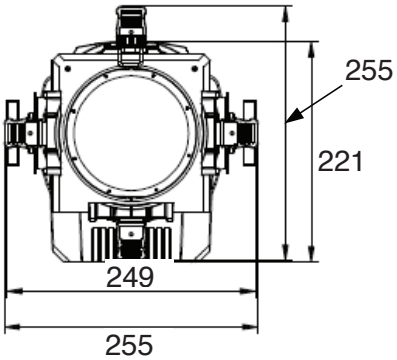

All measurements in mm

HARMAN PROFESSIONAL INC. • 8500 BALBOA BOULEVARD • NORTHRIDGE • CA 91329 • USA • +1 818 893 8411

©2020 HARMAN Professional. All rights reserved. Martin® is a registered trademark of HARMAN Professional Inc. registered in the United States and/or other countries.
Features, specifications, and appearance are subject to change without notice. Rev. 202003

ELP CL IP

COLOR LED ELLIPSOIDAL LIGHT FIXTURE – IP65 RATED

SPEC SHEET

DIMENSIONS (ZOOM LENSES)

PHYSICAL (15–30° ZOOM LENS)

Length ..... 456.4 mm (17.96 in.)
Width ..... 254.4 mm (10.02 in.)
Height ..... 254.5 mm (10.02 in.)
Weight ..... 6 kg (13.2 lb)

PHYSICAL (25–50° ZOOM LENS)

Length ..... 446.9 mm (17.6 in.)
Width ..... 254.3 mm (10.01 in.)
Height ..... 254.3 mm (10.01 in.)
Weight ..... 6 kg (13.2 lb)

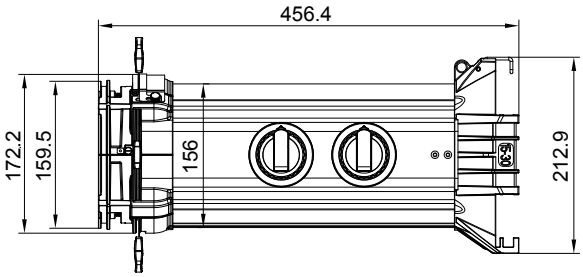

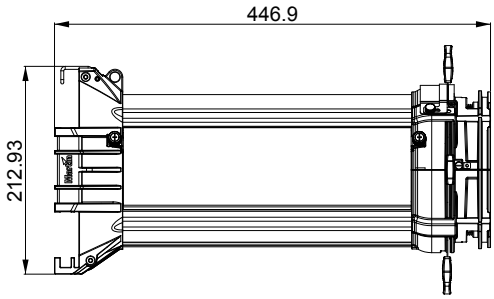

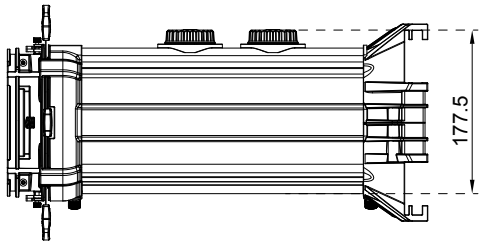

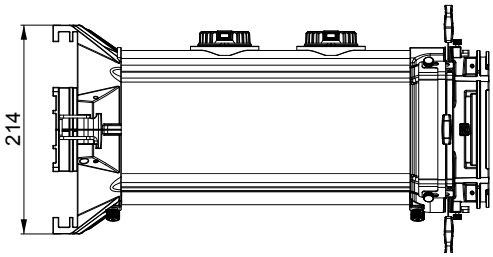

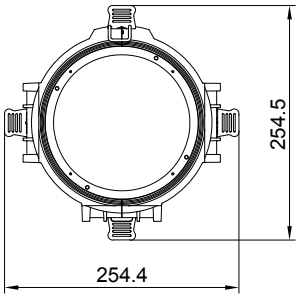

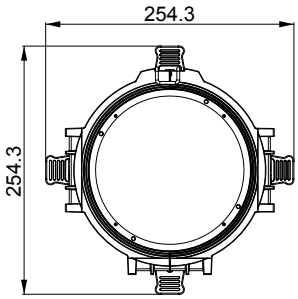

All measurements in mm

HARMAN PROFESSIONAL INC. • 8500 BALBOA BOULEVARD • NORTHRIDGE • CA 91329 • USA • +1 818 893 8411

©2020 HARMAN Professional. All rights reserved. Martin® is a registered trademark of HARMAN Professional Inc. registered in the United States and/or other countries.
Features, specifications, and appearance are subject to change without notice. Rev. 202003