ELP Manet 8f

User Manual

Martin

©2025 HARMAN PROFESSIONAL DENMARK ApS. All rights reserved. Features, specifications and appearance are subject to change without notice. HARMAN PROFESSIONAL DENMARK ApS and all affiliated companies disclaim liability for any injury, damage, direct or indirect loss, consequential or economic loss or any other loss occasioned by the use of, inability to use or reliance on the information contained in this document. Martin is a registered trademark of HARMAN PROFESSIONAL DENMARK ApS registered in the United States and/or other countries.

HARMAN PROFESSIONAL DENMARK ApS, Olof Palmes Alle 44, 8200 Aarhus N, Denmark
HARMAN PROFESSIONAL, INC., 8500 Balboa Blvd., Northridge CA 91325, USA

www.martin.com

Martin ELP Manet 8f User Manual with Safety Manual English, P/N 5154548-00 Revision A

Table of contents

Introduction 4
- Before using the product for the first time 4

Fixture overview 5

DMX control 6
- Data network requirements 6
- Tips for reliable data transmission 6
- Connecting the DMX data link 6

Fixture setup 7
- Using the control panel 7
- DMX addressing 9
- DMX control mode 9
- Display ON/OFF 12
- Display sleep 12
- Display intensity 12
- Display rotation 12
- Display contrast 12
- Display errors 13
- Returning all settings to factory defaults 13
- Fixture test 13
- Fixture information 13
- Viewing live DMX values 13
- Setting control values manually 13
- Identifying a fixture in the rig 13

Focusing adjustment 14

Using RDM 15
- Scanning for RDM devices on the data link 15
- Getting status and setting options by RDM 15
- RDM 15

Effects 18
- Dimming 18
- Strobe effects 18
- Color mixing 18
- Color presets (virtual color wheel) 18
- CTC 18
- Tint (Green/Magenta shift) 18
- PWM frequency fine-tuning 18
- Barndoors module 18
- Gel frame 18

Service and maintenance 19
- Cleaning 19
- Uploading new firmware 19
- Service and repairs 20

DMX protocols 21
- Compact Mode 21
- Basic Mode 22
- Direct Mode 24
- Control/Settings DMX channel 25

Control panel menus 26

Troubleshooting 31

Introduction

The ELP Manet 8f from Martin® is a wash lighting fixture with a 500 W Red, Green, Blue, Amber, Lime, Cyan LED engine that delivers a best-in-class TM-30 Rf of 95 and a CRI score of 98.

The fixture provides a calibrated color mixing system that offers two different output modes:

- High-quality mode with a CRI of 98 and CCT of 6500 K at 11000 lumens output
- High-output mode with a CRI of 90 and CCT of 6500 K at 13100 lumens output.

The fixture has 16-bit dimming with 4 selectable dimming curves. It is ideal for theatre, art lighting, architectural lighting and key lighting applications.

The ELP Manet 8f can be controlled using any DMX-compliant controller and can be remotely configured by RDM and the Martin Companion smartphone app using the fixture's NFC functionality. It also features stand-alone operation and can store one custom stand-alone scene.

The fixture is supplied with the Safety and Installation Manual that you can also find included at the end of this User Manual, a manually adjustable rotatable four-leaf barndoor module, a gel frame, and an integrated hanging bracket / theatre yoke with easy tilt adjustment.

Before using the product for the first time

1. Read the Safety and Installation Manual that is supplied with fixtures and included at the end of this User Manual before installing, operating or servicing the fixture.
2. Unpack the fixture and check that there is no transportation damage before using it. Do not try to operate a damaged fixture.
3. Before operating, ensure that the voltage and frequency of the power supply match the power requirements of the fixture.
4. If the fixture is not going to be hard-wired to a mains supply, install a local power plug on the end of the power input cable.
5. If fixtures are exposed to a sudden temperature change, give them time to warm or cool to the ambient temperature before applying power. This will help avoid damage due to condensation.
6. Check the support pages on the Martin website at www.martin.com for the most recent user documentation and technical information about the fixture. Martin user manual revisions are identified by the revision letter at the bottom of the inside cover.

Fixture overview

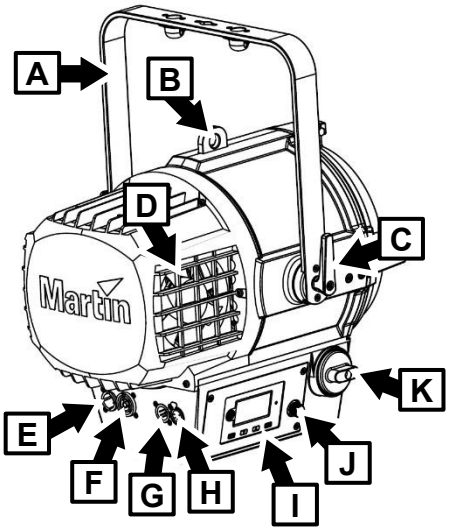

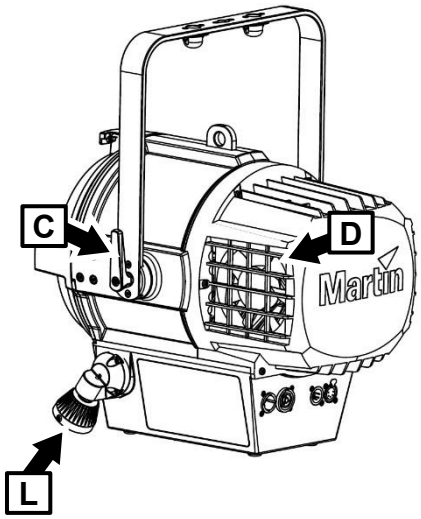

A – Mounting bracket / yoke with quarter-turn fastener receptacles and hole for M12 mounting bolt

B – Safety cable attachment point

C – Tilt adjustment handles

D – Cooling fan vents

E – Mains IN connector (Neutrik powerCON TRUE1 male)

F – Mains THRU connector (Neutrik powerCON TRUE1 female)

G – DMX IN connector (5-pin locking XLR male)

H – DMX THRU connector (5-pin locking XLR female)

I – Control panel with LCD display

J – Multifunction control knob

K – Focus (beam angle) adjustment knob

L – Focus (beam angle) adjustment pole receptacle

DMX control

Data network requirements

A DMX 512 data link is required in order to control the fixture via DMX. The fixture has 5-pin XLR connectors for DMX data input and output.

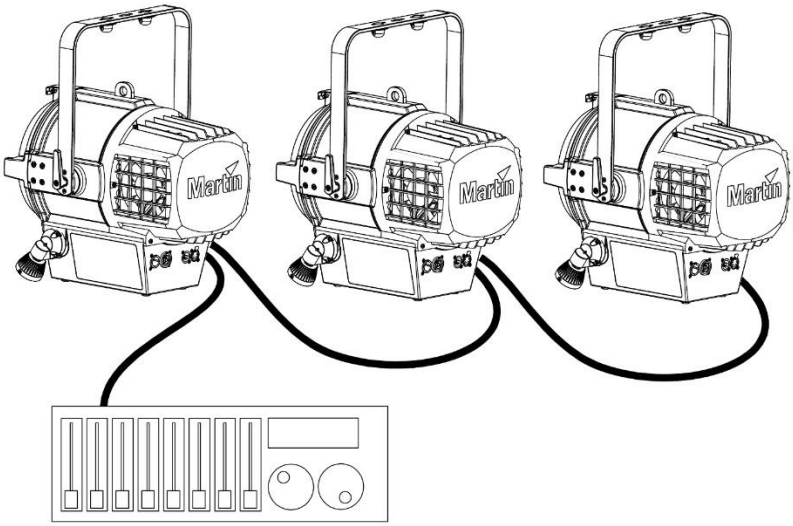

Up to 32 devices can be linked together in a single daisy chain. The total number of fixtures in one 512-channel DMX universe is limited by the number of DMX channels required by the fixtures. Note that if independent control of a fixture is required, it must have its own DMX channels. Fixtures that are required to behave identically can share the same DMX address and channels. To add more fixtures or groups of fixtures when the above limits are reached, add another DMX universe or split the daisy-chained link into branches using a powered DMX splitter-amplifier.

Tips for reliable data transmission

Use shielded twisted-pair cable designed for RS-485 devices: standard microphone cable cannot transmit control data reliably over long runs. 24 AWG cable is suitable for runs up to 300 meters (1000 ft.). Heavier gauge cable and/or a DMX buffer is recommended for longer runs. The pin-out on all connectors is:

- pin 1 = shield
- pin 2 = cold (-)
- pin 3 = hot (+).

Pins 4 and 5 in the XLR connectors are not used in the fixture but are passed through for possible additional data signals as required by the DMX512-A standard. Standard pin-out is pin 4 = data 2 cold (-) and pin 5 = data 2 hot (+).

To split the link into branches, use an RDM-compatible opto-isolated DMX splitter. Terminate the link by installing a termination plug in the output socket of the last fixture. The termination plug, which is a male XLR plug with a 120 Ohm, 0.25 W resistor soldered between pins 2 and 3, “soaks up” the control signal so it does not reflect and cause interference. If a splitter is used, terminate each branch of the link.

Connecting the DMX data link

To connect the fixture to data:

- Connect the DMX data output from the controller to the closest fixture’s male XLR DMX IN connector.
- Connect the first fixture’s DMX THRU (output) connector to the DMX IN connector of the next fixture and continue connecting fixtures’ THRU to IN connectors. Terminate the last fixture on the link with a DMX termination plug.

Fixture setup

This section explains the settings that govern fixture control and behavior. You can adjust settings using the following methods:

- The menus in the fixture's onboard control panel and display (see 'Control panel menus' on page 26 for a table with full details of the control menus).
- DMX on the Control / Settings channel
- RDM using an RDM-compatible DMX controller such as the Martin Companion Desktop Windows application (see "Using RDM" on page 14).
- The Martin Companion Desktop Windows application (download free of charge from www.martin.com) with the Martin Companion USB-to-DMX link cable (available from Martin suppliers).
- The Martin Companion smartphone app, using the fixture's NFC functionality.

Using the control panel

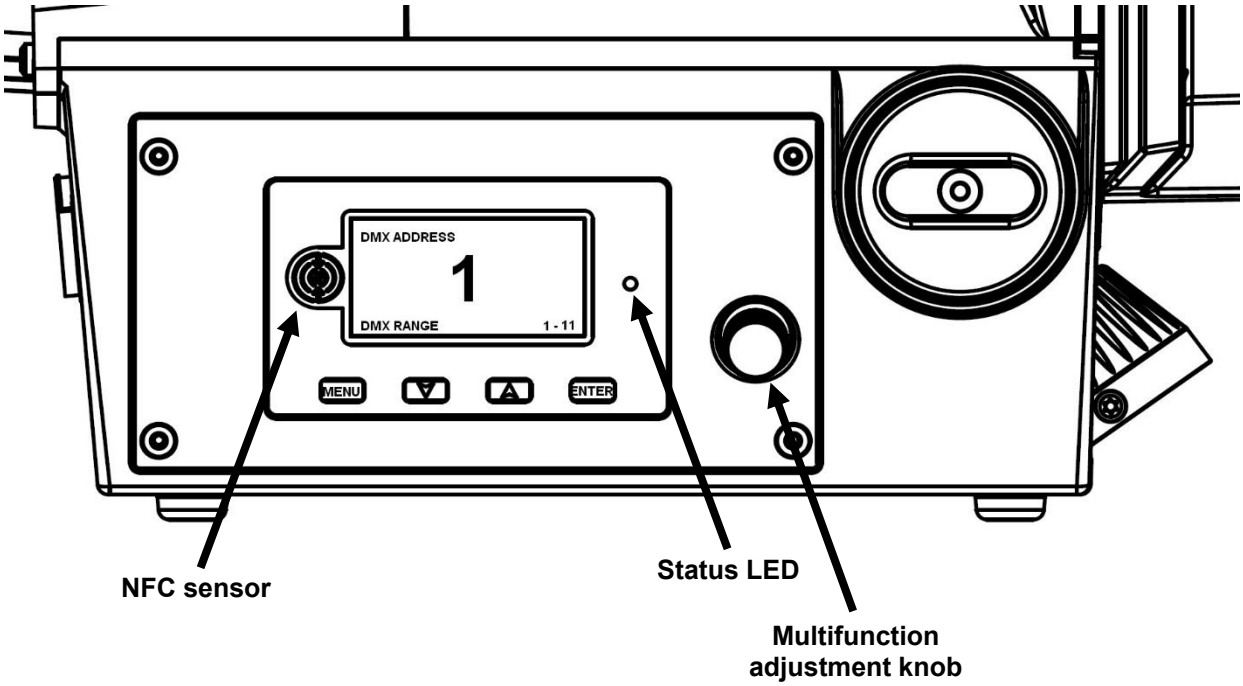

See drawing above. Use the fixture's control panel as follows:

- To access the control menus, press the MENU button.
- Navigate the menu structure using the ENTER, DOWN ⮟ and UP ⮝ buttons.
- To select a menu option or to confirm a selection, press the ENTER button.
- To return to a higher level in the menu structure without making a change, press the MENU button.
- To exit the control menus completely, press and hold the MENU button.

Control panel display

When you power the fixture on, it resets and then shows the following data in the control panel display:

- DMX address currently used
- DMX channels currently occupied

Status LED

The status LED to the right of the control panel display indicates fixture status by showing a color and DMX status by flashing or lighting constantly:

- GREEN: All parameters normal.
- AMBER: Warning (service interval exceeded, for example).
  - If ERROR MODE is set to Normal, the warning message will be shown in the display.
  - If ERROR MODE is set to Silent, the display must be activated by pressing the Enter button to display the warning message.
- • RED: Error detected.
  - - If ERROR MODE is set to NORMAL, the error message will be shown in the display.
  - - If ERROR MODE is set to SILENT, display the error message by entering the menus and going to SERVICE → ERROR LIST.
- • FLASHING: No DMX signal detected.
- • CONSTANT: Valid DMX signal detected.

The status LED remains active even if the display enters sleep mode.

Multifunction adjustment

The Multifunction adjustment knob to the right of the control panel lets you adjust the dimming level, color temperature and tint effects. The currently selected effect and values are indicated in the control panel display.

Use the Multifunction knob as follows:

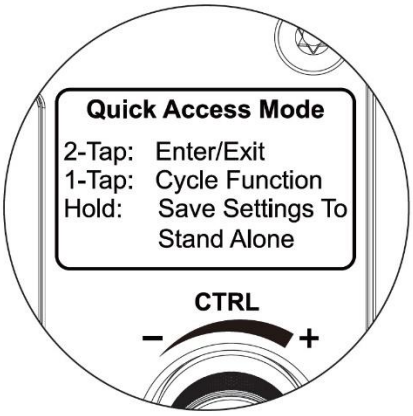

1. Tap the knob twice to enter adjustment mode.
2. Tap the knob once to advance to the next effect (Dimming → CTC → Tint → Dimming etc.).
3. Turn the knob clockwise to increase the value of the output intensity / color temperature / shift Tint towards Magenta.
   Turn the knob counter-clockwise to decrease the value of the output intensity / color temperature / shift Tint towards Green.

   Adjusting effects in this way gives you a quick way of focusing the fixture and setting up effects without an external controller. Note that if you tap the knob twice (as described below) you will lose these adjustments!
4. Either:
   - Tap the knob twice to exit adjustment mode, deleting any adjustments that you have made, and return the fixture to its previous state, or
   - Press and hold the knob to save any adjustments made under points 2. and 3. above and store those effect levels as the fixture's stand-alone scene. The fixture will show this scene each time it is powered on and not receiving a DMX signal if it is set to OFFLINE MODE → RUN STAND-ALONE SHOW. The stand-alone scene remains stored in memory even if power is cycled off and on.

NFC sensor

The Martin Companion smartphone app available from Apple Store and Google Play lets you configure compatible Martin fixtures from your phone, view and export GDTF files etc.

Holding a phone close to the NFC sensor on the ELP Manet 8f control panel and launching the Martin Companion app lets you configure various fixture settings from your phone.

DMX addressing

Available via: Onboard control panel, RDM, Martin Companion app

Each fixture must be assigned a DMX address. The DMX address, also known as the start channel, is the first channel used to receive instructions from a DMX controller. The fixture is controlled using 11 or 17 DMX channels depending on the personality set. If a fixture using 17 channels has a DMX address of 1, then it uses channels 1 to 17 inclusive. The next fixture in the DMX chain can then be set to a DMX address of 18.

For independent control, each fixture must be assigned its own control channels. Two fixtures of the same type may share the same address if identical behavior is desired. Address sharing can be useful for diagnostic purposes and symmetric control, particularly when combined with the inverse pan and tilt options.

To set the fixture's DMX address in the fixture's control panel:

1. Enter the control menu and select DMX SETUP. Press ENTER.
2. Select DMX ADDRESS and press ENTER.
3. Use the UP and DOWN buttons to select the desired address setting.
4. Press ENTER to confirm your selection (or to return to the top level menu without changing the settings, press the MENU button).

DMX control mode

Available via: Onboard control panel, RDM, Martin Companion app

The DMX control mode setting sets the fixture's DMX personality: the control options available and the number of control channels used. You can select from 3 modes:

- COMPACT – uses 11 DMX channels. It provides an electronic strobe/shutter effect, 16-bit dimming, 16-bit RGB color control, White Color Temperature and Tint (Magenta-Green shift) control. It also gives access to fixture configuration on the Control/Settings channel
- BASIC (the default setting) – uses 17 DMX channels. It provides an electronic strobe/shutter effect, 16-bit dimming, 16-bit RGB color control, White Color Temperature control, Tint (Magenta-Green shift) control, 48 color presets with virtual color wheel effects and LED refresh rate fine-tuning via DMX. It also gives access to fixture configuration on the Control/Settings channel.
- DIRECT – uses 17 DMX channels. It provides an electronic strobe/shutter effect, 16-bit dimming, 16-bit direct control of each of the fixture's six LED colors: Red, Green, Blue, Amber, Lime and Cyan, and LED refresh rate fine-tuning via DMX. It also gives access to fixture configuration on the Control/Settings channel.

See the section "DMX protocol" on page 21 for full details of DMX channels and commands.

Dimming curves

Available via: Onboard control panel, DMX Control/Settings channel, RDM, Martin Companion app

Four curves are available for dimming behavior:

- LINEAR – The increase in light intensity appears to be linear as the DMX value is increased.
- SQUARE LAW (the default setting) – Light intensity control is finer at low levels and coarser at high levels.
- INV SQ LAW – (Inverse Square Law) light intensity control is coarser at low levels and finer at high levels.
- S-CURVE – Light intensity control is finer at low levels and high levels and coarser at medium levels.

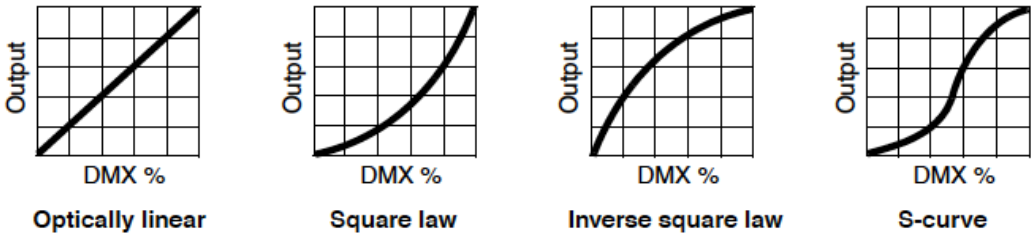

Tungsten emulation

Available via: Onboard control panel, DMX Control/Settings channel, RDM, Martin Companion app

The fixture features a TUNGSTEN setting in which it emulates the warm output from a fixture with a tungsten incandescent lamp. The base color temperature is set to 3000 K and becomes warmer at lower intensity levels.

Besides the TUNGSTEN setting, Basic and Compact DMX control modes also include a CTC channel that lets you select a custom base color temperature from 1850 K to 12 850 K. In these DMX modes you use color mixing on top of the base color temperature.

Color mode

Available via: Onboard control panel, DMX Control/Settings channel, RDM, Martin Companion app

The ELP Manet 8f offers two options that let you prioritize either color saturation or color calibration to give even color across multiple fixtures. The settings available are:

- EXTENDED GAMUT (the default setting) – The White point and mixed colors are calibrated, but brightness is not calibrated. You can saturate colors to the maximum level available.
- CALIBRATED – The entire color gamut is calibrated, resulting in a slight loss of color saturation. Brightness is calibrated.

Output mode

Available via: Onboard control panel, DMX Control/Settings channel, RDM, Martin Companion app

You can prioritize either output intensity or light quality in the fixture's light output. The settings available are:

- HIGH OUTPUT (the default setting) – priority given to highest light output intensity.
- HIGH QUALITY – priority given to highest light quality (best CRI and TM-30 performance).

Video tracking

Available via: Onboard control panel, DMX Control/Settings channel, RDM, Martin Companion app

When VIDEO TRACKING is enabled, color fading is optimized for speed of color changes if used with a video source. The fixture does not 'smooth out' DMX input but instead snaps instantly when a DMX value changes.

When VIDEO TRACKING is disabled (the default setting), color fading is optimized for smoothness. The fixture processes the DMX signal it receives, tracking (or smoothing out) changes in values in order to ensure smooth fading between colors and/or intensities.

Fan speeds / Cooling mode

Available via: Onboard control panel, DMX Control/Settings channel, RDM, Martin Companion app

This setting lets you decide whether to give priority to low cooling fan noise or high light output. Four settings are available:

- CONSTANT FULL sets cooling fans to operate at constant full speed without temperature regulation. This setting maximizes cooling and gives priority to the highest possible light output intensity. It can also be used as a quick way of dislodging dirt from fans. The fixture reduces light output only if full fan speed is not enough to keep the fixture within its operating temperature limits.

- REGULATED HIGH (the default setting) uses temperature regulation and allows cooling fans to rise to *high* speed if necessary. Fans first run at low speed. If the fixture's operating temperature rises above the permitted range, fan speed is increased. If the fixture reaches maximum permitted operating temperature and high-speed fan operation is not enough to control fixture temperature, light output intensity is limited to keep the fixture within its operating temperature range.
- REGULATED MEDIUM uses temperature regulation and limits cooling fans to *medium* speed. Fans first run at low speed. If the fixture's operating temperature rises above the permitted range, fan speed is increased. If the fixture reaches maximum permitted operating temperature and medium-speed fan operation is not enough to control fixture temperature, light output intensity is limited to keep the fixture within its operating temperature range.
- REGULATED LOW uses temperature regulation and limits cooling fans to *low* speed. It gives priority to lowest possible noise with lower priority given to light output intensity. If the fixture reaches maximum permitted operating temperature and low-speed fan operation is not enough to control fixture temperature, light output intensity is limited to keep the fixture within its operating temperature range.

Offline mode

Available via: Onboard control panel, DMX Control/Settings channel, RDM, Martin Companion app

The OFFLINE MODE setting determines how the fixture behaves when it is powered on but not receiving a DMX signal or if the DMX signal is lost. There are two options:

- STAND-ALONE – If no DMX data signal is present, the fixture goes to stand-alone operation (see below).
- HOLD LAST LOOK (the default setting) – If no DMX data signal is present, the fixture obeys the last DMX commands received (or the last effects that were set manually) on all channels.

Stand-alone mode

The fixture can operate in stand-alone mode in which it displays one stand-alone scene (i.e. one combination of effects) with no controller present.

Stand-alone operation is overridden if the fixture receives a DMX signal.

Record current look

Available via: Onboard control panel, DMX Control/Settings channel, RDM

The RECORD CURRENT LOOK command stores the DMX values currently being received by the fixture (or the values that have been set manually via the MANUAL CONTROL menu in the onboard control panel or the Multifunction adjustment knob) and saves them as the scene to be used in stand-alone operation.

Stand-alone mode (sync)

Available via: Onboard control panel, RDM, Martin Companion app

STAND-ALONE (SYNC) sets a fixture to show its stored stand-alone scene whenever it is not receiving a DMX signal. You can also set one or more SYNC CLIENT fixtures to show their own stand-alone scene if they are connected to the SYNC HOST fixture on a DMX data link and if no DMX signal is present. The available settings are:

- INDIVIDUAL (the default setting) – Fixture goes to stand-alone operation and displays its stored stand-alone scene whenever it is powered on and not receiving a DMX signal. It ignores any external synchronizing signals.
- SYNC HOST – Fixture goes to stand-alone operation and displays its stored stand-alone scene whenever it is powered on and not receiving a DMX signal. It also sends out a synchronizing signal that causes all other fixtures on the link that are set to SYNC CLIENT to start displaying their own stand-alone scenes.

  Important! *Set only ONE fixture on the DMX link to be the stand-alone SYNC HOST, or you may cause unexpected behavior in all fixtures.*

- SYNC CLIENT – Fixture listens for a synchronizing signal from a SYNC HOST fixture and shows its own stored stand-alone scene whenever it is powered on and not receiving a DMX signal but receiving a signal from SYNC HOST fixture. If you stop stand-alone operation in the SYNC HOST fixture, SYNC CLIENT fixtures also stop showing their stand-alone scenes.

Display ON/OFF

Available via: DMX Control/Settings channel, Martin Companion app

You can black out the fixture's control panel display to remove distracting light sources in the lighting rig. This can be useful in a theater or event environment, for example. The default setting for the display is ON.

Display sleep

Available via: Onboard control panel, RDM, Martin Companion app

You can set the fixture's control panel display to black out after a period of inactivity. The options are:

- OFF – Display does not black out automatically.
- 2 MINUTES (the default setting) – Display blacks out after 2 minutes.
- 5 MINUTES – Display blacks out after 5 minutes.
- 10 MINUTES – Display blacks out after 10 minutes.

Display intensity

Available via: Onboard control panel, RDM, Martin Companion app

You can adjust the brightness of the fixture's control panel display. The options are:

- FULL
- 50% (the default setting).

Display rotation

Available via: Onboard control panel, RDM, Martin Companion app

You can adjust the orientation of the fixture's control panel display, rotating the contents of the display thru 180° to make it easier to read when the fixture is installed upside-down. The options are:

- NORMAL (the default setting)
- ROTATE 180.

Display contrast

Available via: Onboard control panel, RDM, Martin Companion app

You can adjust the contrast of the fixture's control panel display to make the display easier to read. The default contrast level is 41.

Hibernation mode

Available via: Onboard control panel, DMX Control/Settings channel, RDM, Martin Companion app

Hibernation mode sets light output intensity to zero and disables effect deployment. It brings power consumption down to 3.8 W and provides an economical option if you want to keep power applied to the fixture when it is not in use. In an architectural or theatre setting, for example, you can set up a cue at the controller that switches the fixture to hibernation mode during periods when the fixture is not active. Hibernation is set to OFF by default.

When you bring the fixture out of hibernation mode it performs a full reset, so be prepared for it to light up and deploy effects.

Display errors

Available via: Onboard control panel, RDM, Martin Companion app

If you enable the DISPLAY ERRORS feature, the control panel display will light up and the fixture will display the type of error if the fixture's self-diagnosis system detects an operating error. DISPLAY ERRORS is enabled by default.

Returning all settings to factory defaults

Available via: Onboard control panel, RDM, Martin Companion app

Resetting to factory defaults returns the fixture's DMX address, DMX mode and all custom settings to their original factory configuration.

Fixture test

Available via: Onboard control panel, RDM, Martin Companion app

You can run self-test sequences on the fixture's LED emitters in order to check correct functionality. Each color of emitters will be switched on in turn.

Fixture information

You can call up various fixture information readouts: power on time, LED hours, software version, fixture ID, RDM unique ID, fan speeds, temperatures. Availability depends on the type of fixture information involved. The Martin Companion app always contains all information. Some information such as the factory serial number is not available in the onboard control panel. The factory serial number is available in the Martin Companion app and via RDM.

Viewing live DMX values

Available via: Onboard control panel

It is possible to view the DMX values currently being received on all the DMX channels. This can be useful for troubleshooting or testing purposes.

Setting control values manually

Available via: Onboard control panel, RDM, Martin Companion app

You can manually set DMX control values. This may be useful when testing or when using the fixture in a static setting without a DMX controller.

You can also reset the fixture manually. Be prepared for the fixture to light up and deploy effects if you carry out a manual reset.

Identifying a fixture in the rig

Available via: RDM, Martin Companion app

It can be useful to identify which fixture you are communicating with in an installation with multiple fixtures. If you send an IDENTIFY command via RDM or using the Martin Companion app, the fixture that you are communicating with flashes a signal.

Focusing adjustment

See drawings below. The fixture has a focusing (beam angle) adjustment knob **A** next to the control panel that lets you manually refocus the fixture. The fixture also has a pole-operated zoom cup **B** that lets you manually refocus the fixture from below using an adjustment pole if the fixture is installed overhead in a lighting rig.

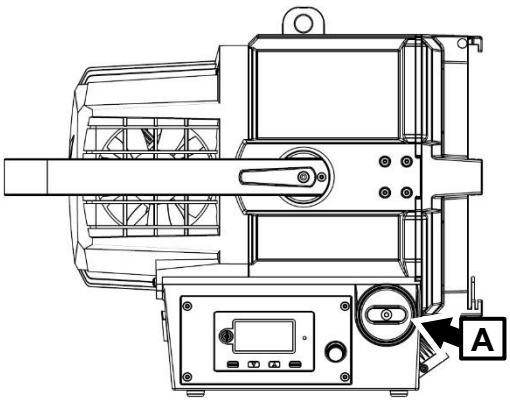

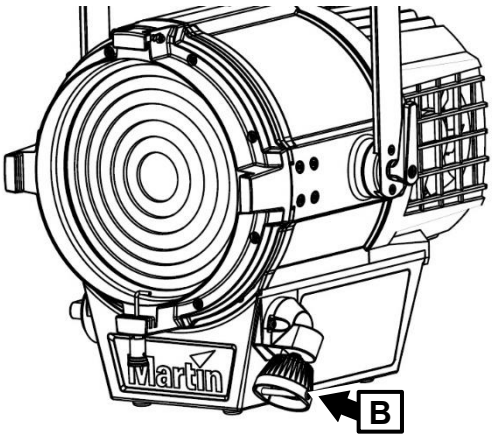

Barn door accessory

Note that a manually adjustable four-leaf barn door module is supplied with the fixture.

Using RDM

You can remotely configure the fixture over the DMX line using a suitable RDM-compatible controller such as Martin Companion Desktop that is connected to the installation via a DMX data link.

A full list of the RDM functions that the ELP Manet 8f supports is given at the end of this chapter. These functions are generally referred to using the more specific term ‘PIDs’ or ‘Parameter IDs’.

Scanning for RDM devices on the data link

Before you can communicate with fixtures using RDM, you must send a scan command (also called a device discovery command) to all the devices on the data link so that the RDM controller can identify them. It does this by retrieving each device’s factory-set unique identifier (UID). This process can take some time depending on the number of devices on the link.

Getting status and setting options by RDM

The status and options listed in the table below can be read and set by RDM.

You can set an option on one fixture by sending a unicast RDM command to that one fixture only, or you can set the same option on all the fixtures on the data link by sending a broadcast RDM command to all the devices on the link.

For status reading, you can only use unicast RDM to read information from an individual fixture.

RDM

As a minimum, the ELP Manet 8f supports the following RDM functions:

Device discovery

Hex	RDM PID
0x0001	DISC_UNIQUE_BRANCH
0x0002	DISC_MUTE
0x0003	DISC_UN_MUTE

Device management

Hex	RDM PID	Notes	GET	SET
0x0020	QUEUED_MESSAGE	Get queued messages	✓	
0x0030	STATUS_MESSAGES	Get status/error information	✓	
0x0031	STATUS_ID_DESCRIPTION	Status/error description	✓	
0x0032	CLEAR_STATUS_ID	Clear status/error queue	✓	
0x0050	SUPPORTED_PARAMETERS	Parameter discovery	✓	
0x0051	PARAMETER_DESCRIPTION	Parameter discovery	✓	
0x0060	DEVICE_INFO	Get basic info	✓	
0x0080	DEVICE_MODEL_DESCRIPTION	Product name	✓	
0x0081	MANUFACTURER_LABEL	Manufacturer name	✓	
0x0082	DEVICE_LABEL	User-settable label	✓	✓
0x0090	FACTORY_DEFAULTS	Reset to factory defaults	✓	✓
0x00C0	SOFTWARE_VERSION_LABEL	Fixture firmware version	✓	

0x00E0	DMX_PERSONALITY	DMX Mode	✓	✓
0x00E1	DMX_PERSONALITY_DESCRIPTION	DMX Mode name	✓	
0x00F0	DMX_START_ADDRESS	DMX start address	✓	✓
0x0121	SLOT_DESCRIPTION	DMX channel description	✓	
0x0200	SENSOR_DEFINITION	Sensor description	✓	
0x0201	SENSOR_VALUE	Sensor value	✓	
0x0400	DEVICE_HOURS	Hours fixture powered on (resettable)	✓	✓
0x870A	DEVICE_HOURS_TOTAL	Hours fixture powered on (non-resettable)	✓	
0x0401	LAMP_HOURS	Hours LEDs powered on (resettable)	✓	✓
0x870B	LAMP_HOURS_TOTAL	Hours LEDs powered on (non-resettable)	✓	
0x0405	DEVICE_POWER_CYCLES	Number of fixture power cycles (resettable)	✓	✓
0x870C	POWER_CYCLES_TOTAL	Number of fixture power cycles (non-resettable)	✓	
0x0500	DISPLAY_INVERT	Flip control panel display	✓	✓
0x0501	DISPLAY_LEVEL	Control panel display intensity	✓	✓
0x1000	IDENTIFY_DEVICE	Highlight fixture in rig	✓	✓
0x1001	RESET_DEVICE	Warm/cold reset		✓
0x1020	PERFORM_SELFTEST	Perform automatic self-test	✓	✓
0x1021	SELF_TEST_DESCRIPTION	Self-test description	✓	
0x1030	CAPTURE_PRESET	Capture current DMX status		✓
0x1031	PRESET_PLAYBACK	Playback preset	✓	✓
0x82xx	MANUAL_MODE_OVERRIDE	Remote manual control	✓	✓
0x81xx	PRESET_PLAYBACK_LIMIT	Standalone cue counter	✓	✓
0x8101	SYNCHRONIZED	Sync mode in stand-alone operation	✓	✓
0x81xx	OFFLINE_MODE	What to do when DMX stops	✓	✓
0x810D	STAND-ALONE_CTRL_MODE	DMX mode of the fixture when current stand-alone show was stored	✓	
0x8001	DMX_RESET	Enable/disable fixture power off via DMX	✓	✓
0x8003	FIXTURE_ID	User-changeable fixture number	✓	✓
0x8004	COLOR_MODE	Set color mode: Calibrated - Raw - Extended	✓	✓
0x8308	DISPLAY_ERRORS_ENABLE	Show errors in control panel display	✓	✓
0x8310	DIMMER_CURVE	Dimming curve	✓	✓
0x8312	DISPLAY_AUTO_OFF	Control panel display automatic sleep mode	✓	✓
0x8325	VIDEO_TRACKING	Video tracking On/Off	✓	✓

0x8326	DISPLAY_CONTRAST	Control panel display contrast	✓	✓
0x8329	HIBERNATION_MODE	Enable/disable hibernation	✓	✓
0x832A	TUNGSTEN_MODE	Enable/disable tungsten mode	✓	✓
0x8334	COLOR_ENGINE_OUTPUT_MODE	High Output vs. High Quality	✓	✓
0x8603	FAN_CLEAN	Fan clean mode	✓	✓
0x8604	FAN_MODE	Fan cooling mode: - 0x04 Constant Full - 0x05 Regulated High - 0x06 Regulated Medium - 0x07 Regulated Low	✓	✓
0x8700	SERIAL_NUMBER	Read factory serial number	✓	

Effects

This section describes the effects available in the ELP Manet 8f. See ‘DMX protocol’ on page 21 for a full list of the DMX channels and values required to control the fixture’s effects.

Dimming

Overall intensity can be precisely adjusted from 0 to 100%. In Basic DMX Mode, intensity control is 8-bit. In Compact and Direct DMX Modes, intensity control is 16-bit.

Strobe effects

An electronic shutter provides instant open and blackout, random and variable speed flash and pulse effects.

Color mixing

The ELP Manet 8f has Red, Green, Blue, Amber, Lime and Cyan emitters which can be individually controlled with 16-bit control resolution.

Color presets (virtual color wheel)

Basic DMX control mode lets you select from a range of fixed color temperatures and LEE-referenced color presets on the virtual color wheel / color preset channel. Virtual color wheel rotation and random color effects are also available on this channel.

CTC

In Compact and Basic DMX control modes, the White color temperature of the fixture can be adjusted from 1850 K to 12 500 K with 8-bit control. You mix color on top of this base White color temperature.

Tint (Green/Magenta shift)

Green/Magenta shift can be adjusted from a Magenta shift (0.05 negative Duv) to Green shift (0.05 positive Duv).

The default DMX value on this channel is 128. At value 127-128, there is no green or magenta shift. Changing the DMX value moves the white point off the black body curve towards Green or Magenta while keeping the correlated color temperature unchanged.

PWM frequency fine-tuning

The LED PWM frequency fine-tuning channel available in Basic and Direct DMX control modes adjusts the fixture’s LED refresh rate. It can sometimes be advantageous to adjust the PWM frequency of the fixture’s LEDs if flickering is seen on TV cameras running at a high shutter speed, for example.

The default PWM frequency is 3600 Hz. You can adjust the frequency by +/- 2%.

Barndoors module

A barndoors module with four manually adjustable anti-reflective leaves is supplied with the fixture. See the Safety and Installation Manual included at the end of this User Manual for details of installing this module.

Gel frame

A gel frame is supplied with the fixture. See the Safety and Installation Manual included at the end of this User Manual for details of installing the frame. Use only gels that are suitable for theatre/entertainment lighting applications.

Service and maintenance

Warning! Read the ‘Safety Precautions’ section of the Safety and Installation Manual supplied with fixtures and included at the end of this User Manual before servicing the fixture.

Refer any service operation not described in this User Manual to a qualified service technician.

Excessive dust, smoke fluid, and particle buildup degrades performance, causes overheating and will damage the fixture. Damage caused by inadequate cleaning or maintenance is not covered by the product warranty.

Disconnect mains power before cleaning or servicing the fixture.

Service fixtures in an area where there is no risk of injury from failing parts, tools or other materials.

Cleaning

The cleaning of external optical lenses must be carried out periodically to optimize light output. Cleaning schedules for lighting fixtures vary greatly depending on the operating environment. It is therefore impossible to specify precise cleaning intervals for the fixture. Environmental factors that may result in a need for frequent cleaning include:

- Use of smoke or fog machines.
- High airflow rates (near air conditioning vents, for example).
- Presence of cigarette smoke.
- Airborne dust (from stage effects, building structures and fittings or the natural environment at outdoor events, for example).

If one or more of these factors is present, inspect fixtures within their first 100 hours of operation to see whether cleaning is necessary. Check again at frequent intervals. This procedure will allow you to assess cleaning requirements in your particular situation. If in doubt, consult your Martin dealer about a suitable maintenance schedule.

Use gentle pressure only when cleaning, and work in a clean, well-lit area. Do not use any product that contains solvents or abrasives, as these can cause surface damage.

To clean the fixture:

1. Disconnect the fixture from power and allow it to cool for at least 10 minutes.
2. Vacuum or gently blow away dust and loose particles from the outside of the fixture and the air vents at the back and sides of the head and in the base with low-pressure compressed air.
3. Clean the lens by wiping gently with a soft, clean lint-free cloth moistened with a weak detergent solution. Do not rub the surface hard: lift particles off with a soft repeated press. Dry with a soft, clean, lint-free cloth or low-pressure compressed air. Remove stuck particles with an unscented tissue or cotton swab moistened with glass cleaner or distilled water. You can remove the lens tube to clean the rear side of the lens if needed.
4. Check that the fixture is dry before reapplying power.

Uploading new firmware

Martin releases new firmware (fixture software) from time to time if it can improve functionality of Martin fixtures. All firmware versions are available from the Martin website. You can install firmware using a Windows PC running the Martin Companion software suite with a Martin Companion Cable USB/DMX hardware interface connected to the DMX link or directly to the fixture’s DMX IN connector.

You can check the currently installed firmware version in the INFORMATION menu in the fixture’s control panel.

If you update firmware to a newer version, check the ELP Manet 8f area of www.martin.com to see whether an updated version of this User Manual is available for the new firmware.

Installing using a PC running Martin Companion

Important! Do not switch the fixture off or disconnect the source of the firmware during an upload, or the firmware will be corrupted.

The following are required in order to install firmware using a PC:

- A Windows PC running the latest version of the Martin Companion Desktop software suite (available for download from the Martin website at www.martin.com).
- The latest ELP Manet 8f firmware file. Martin Companion automatically downloads this file from the Martin fixture firmware cloud when Martin Companion is launched on a PC that is connected to the Internet.
- A Martin Companion Cable USB-DMX hardware interface, available from your Martin supplier by ordering P/N 91616091.

To install the ELP Manet 8f firmware using Martin Companion:

1. Apply power to the fixture(s) and allow to boot. Connect the Martin Companion Cable hardware interface to your PC and to the fixture's DMX IN connector or to the DMX link. All ELP Manet 8f fixtures that are powered on and connected to the DMX link will have their firmware updated.
2. Start the PC and launch the Martin Companion application.
3. Locate the latest ELP Manet 8f firmware in the Martin Companion application.
4. Start the firmware upload by clicking *Update Firmware* in the Martin Companion application. Do not disconnect the Martin Companion cable or power off the fixture(s) until the upload is complete and the fixture(s) has successfully rebooted.
5. If you are updating multiple fixtures over a DMX link, check that they have all rebooted correctly.

Service and repairs

There are no user-serviceable parts inside the fixture. Do not open the housing.

Do not try to repair the fixture yourself, as this may result in damage or malfunction and may potentially void your product warranty. The fixture must be serviced or repaired by an authorized Martin service technician only.

Installation, on-site service and maintenance can be provided worldwide by the Martin Professional Global Service organization and its approved agents, giving owners access to Martin's expertise and product knowledge in a partnership that will ensure the highest level of performance throughout the product's lifetime. Please contact your Martin supplier for details.

DMX protocols

Compact Mode

DMX footprint: 11 channels

Channel	Resolution	Value	Function	Fade	Default Value
1	8-bit	0 - 19 20 - 49 50 - 200 201 - 210 211 - 255	**Strobe/shutter** Shutter closed Shutter open Strobe slow → fast Shutter open Random strobe slow → fast	Snap	30
2-3	16-bit	0 - 65535	**Dimmer** Closed → Open	Fade	0
4-5	16-bit	0 - 65535	**Red** 0 → 100%	Fade	65535
6-7	16-bit	0 - 65535	**Green** 0 → 100%	Fade	65535
8-9	16-bit	0 - 65535	**Blue** 0 → 100%	Fade	65535
10	8-bit	0 … 128 … 255	**CTC (Color Temperature Control)** *1850 K to 12850 K in 50 K steps* 1850 K … 6500 K … 12850 K	Fade	128
11	8-bit	0-126 … 127-128 … 129-255	**Tint (Green-Magenta shift)*** *Shift towards magenta / negative Duv (0 is maximum offset from black body curve = duv 0.05)* *No shift (on black body curve)* *Shift towards green / positive Duv (255 is maximum offset from black body curve = duv 0.05)* **Tint defaults to neutral. It can be changed using RDM as well as DMX.*	Fade	128

Basic Mode

DMX footprint: 17 channels

Channel	Resolution	Value	Function	Fade	Default Value
1	8-bit	0 - 19 20 - 49 50 - 200 201 - 210 211 - 255	**Strobe/shutter** Shutter closed Shutter open Strobe slow → fast Shutter open Random strobe slow → fast	Snap	30
2-3	16-bit	0 - 65535	**Dimmer** Closed → Open	Fade	0
4-5	16-bit	0 - 65535	**Red** 0 → 100%	Fade	65535
6-7	16-bit	0 - 65535	**Green** 0 → 100%	Fade	65535
8-9	16-bit	0 - 65535	**Blue** 0 → 100%	Fade	65535
10	8-bit	0 … 128 … 255	**CTC (Color Temperature Control)** *1850 K to 12850 K in 50 K steps* 1850 K … 6500 K … 12850 K	Fade	128
11	8-bit	0-126 … 127-128 … 129-255	**Tint (Green-Magenta shift)*** *Shift towards magenta / negative Duv (0 is maximum offset from black body curve = duv 0.05)* *No shift (on black body curve)* *Shift towards green / positive Duv (255 is maximum offset from black body curve = duv 0.05)* ** Tint defaults to neutral. It can be changed using RDM as well as DMX.*	Fade	128
12	8-bit	0 - 10 11 13 15 17 19 21 23 25 27 29 31 33 35 37 39 41 43 45	**Color presets** None, mix color via RGB Color 1 - LEE 790 - Moroccan Pink Color 2 - LEE 157 - Pink Color 3 - LEE 332 - Special Rose Pink Color 4 - LEE 328 - Follies Pink Color 5 - LEE 345 - Fuchsia Pink Color 6 - LEE 194 - Surprise Pink Color 7 - LEE 181 - Congo Blue Color 8 - LEE 071 - Tokyo Blue Color 9 - LEE 120 - Deep Blue Color 10 - LEE 079 - Just Blue Color 11 - LEE 132 - Medium Blue Color 12 - LEE 200 - Double CT Blue Color 13 - LEE 161 - Slate Blue Color 14 - LEE 201 - Full CT Blue Color 15 - LEE 202 - Half CT Blue Color 16 - LEE 117 - Steel Blue Color 17 - LEE 353 - Lighter Blue Color 18 - LEE 118 - Light Blue	Snap	0

		47 49 51 53 55 57 59 61 63 65 67 69 71 73 75 77 79 81 83 85 87 89 91 93 95 97 99 101 103 105 107 - 190 191 – 214 215 – 219 220 – 243 244 – 247 248 - 251 252 - 255	Color 19 - LEE 116 - Medium Blue-Green Color 20 - LEE 124 - Dark Green Color 21 - LEE 139 - Primary Green Color 22 - LEE 089 - Moss Green Color 23 - LEE 122 - Fern Green Color 24 - LEE 738 - JAS Green Color 25 - LEE 088 - Lime Green Color 26 - LEE 100 - Spring Yellow Color 27 - LEE 104 - Deep Amber Color 28 - LEE 179 - Chrome Orange Color 29 - LEE 105 - Orange Color 30 - LEE 021 - Gold Amber Color 31 - LEE 778 - Millennium Gold Color 32 - LEE 135 - Deep Golden Amber Color 33 - LEE 164 - Flame Red Color 34 - LEE 113 - Magenta Color 35 - LEE 343 - Medium Lavender Color 36 - Pure White (White LEDs only) Color 37 - Pure Red (Red LEDs only) Color 38 - Pure Yellow (Red and Green LEDs only) Color 39 - Pure Green (Green LEDs only) Color 40 - Pure Cyan (Green and Blue LEDs only) Color 41 - Pure Blue (Blue LEDs only) Color 42 - Pure Magenta (Blue and Red LEDs only) Color 43 - LEE 115 - Peacock Blue Color 44 - LEE 180 - Dark Lavender Color 45 - LEE 287 - Double CT Orange Color 46 - LEE 204 - Full CT Orange Color 47 - LEE 205 - Half CT Orange Color 48 - LEE 015 - Deep Straw *No function* Color wheel rotation effect fast → slow Color wheel rotation effect stop (wheel stops at current color) Color wheel effect rotation inverse slow → fast Random colors fast Random colors medium Random colors slow		
13 - 15	*No function*				
16	8-bit	0 - 255	**Fixture Control/Settings** See 'Control/Settings DMX channel' on page 25.	Snap	0
17	8-bit	0 1 - 127 128 129 - 254 255	**LED PWM frequency fine-tuning** *No function* Variable -2% → 0% 3600 Hz Variable 0% → +2% Reserved	Snap	128

Direct Mode

DMX footprint: 17 channels

Channel	Resolution	Value	Function	Fade	Default Value
1	8-bit	0 - 19 20 - 49 50 - 200 201 - 210 211 - 255	**Strobe/shutter** Shutter closed Shutter open Strobe slow → fast Shutter open Random strobe slow → fast	Snap	30
2-3	16-bit	0 - 65535	**Dimmer** Closed → Open	Fade	0
4-5	16-bit	0 - 65535	**Red** 0 → 100%	Fade	65535
6-7	16-bit	0 - 65535	**Green** 0 → 100%	Fade	65535
8-9	16-bit	0 - 65535	**Blue** 0 → 100%	Fade	65535
10-11	16-bit	0 - 65535	**Amber** 0 → 100%	Fade	65535
12-13	16-bit	0 - 65535	**Lime** 0 → 100%	Fade	65535
14-15	16-bit	0 - 65535	**Cyan** 0 → 100%	Fade	65535
16	8-bit	0 - 255	**Fixture Control/Settings** See 'Control/Settings DMX channel' on page 25.	Snap	0
17	8-bit	0 1 - 127 128 129 - 254 255	**LED PWM frequency fine-tuning** *No function* Variable -2% → 0% 3600 Hz Variable 0% → +2% Reserved	Snap	128

Control/Settings DMX channel

The Control/Settings DMX channel lets you adjust fixture settings remotely via DMX.

Channel	Resolution	Value	Function	Fade	Default Value
16	8-bit		**Fixture control/settings**	Snap	30
		0 - 9	Idle (disables calibration)		
		10 - 14	Reset entire fixture		
		15 - 22	*No function*		
		23	Dimming curve - Linear		
		24	Dimming curve - Square Law (default)		
		25	Dimming curve - Inverse Square Law		
		26	Dimming curve - S-Curve		
		27 - 35	*No function*		
		36	Video tracking - Enable		
		37	Video tracking - Disable (default)		
		38	Color mode - Extended Gamut (default)		
		39	Color mode - Calibrated Color		
		40 - 51	*No function*		
		52	Control panel display - On (default)		
		53	Control panel display - Off		
		54	Cooling mode - Constant Full		
		55	Cooling mode - Regulated High (default)		
		56	Cooling mode - Regulated Medium		
		57	Cooling mode - Regulated Low		
		58 - 60	*No function*		
		61	Hibernation mode - Enable		
		62	Hibernation mode - Disable (default)		
		63 - 71	*No function*		
		72	Tungsten emulation - Enable		
		73	Tungsten emulation - Disable (default)		
		74	Stand-alone - Record current look (store current scene as stand-alone scene)		
		75	Stand-alone - Go to stand-alone operation when fixture is not receiving a DMX control signal		
		76	Stand-Alone - Hold last look (show last scene when fixture is not receiving a DMX control signal – default)		
		77 - 89	*No function*		
		90	Output mode - High Output (default)		
		91	Output mode - High Quality		
		92 - 255	*No function*		

Control panel menus

To access the menus in the fixture's onboard control panel, press the MENU button. Use the UP and DOWN buttons to navigate the menus. Select any required menu option using the ENTER button. For more information, see 'Using the control ' on page 7. Default fixture settings are shown in **bold**.

Menu level 1	Menu level 2	Menu level 3	Notes
DMX SETUP			
DMX ADDRESS	**001** - XXX		Set DMX address **(default = 001)**
CONTROL MODE	COMPACT		Set DMX control mode
	BASIC		
	DIRECT		
FIXTURE ID			
0 - 9999			User-settable 4-digit fixture ID number **(default = 0)**
PERSONALITY			
DIMMER CURVE	S-CURVE		S-curve (fixture emulates incandescent lamp voltage linear RMS dimming curve)
	INV SQ LAW		Inverse square law dimming curve
	SQUARE LAW		Square law dimming curve
	LINEAR		Optically linear dimming curve
TUNGSTEN EMULATOR	ON		Color temperature and dimming characteristics emulate incandescent tungsten lamp behavior
	OFF		
COLOR MODE	CALIBRATED COLOR		Color mixing optimized for even color rendition across multiple fixtures
	EXTENDED GAMUT		Color mixing optimized for saturation
VIDEO TRACKING	ENABLED		Color fading optimized for speed of color changes
	DISABLED		Color fading optimized for smoothness
DMX RESET	**ON**		Fixture can be reset via DMX
	OFF		Fixture cannot be reset via DMX

COOLING MODE	CONSTANT FULL		Fans optimized for maximum light intensity, fans run at full speed, light intensity reduced only if necessary to keep fixture within max. operating temperature limit
	REGULATED HIGH		Temperature-regulated fan operation speed, light intensity reduced if necessary when cooling fans are allowed to run at high speed
	REGULATED MEDIUM		Temperature-regulated fan operation speed, light intensity reduced if necessary to keep cooling fans at medium speed
	REGULATED LOW		Temperature-regulated fan operation speed, light intensity reduced if necessary to keep cooling fans at low speed
DISPLAY	DISPLAY SLEEP	10 MINUTES	Control panel display goes into sleep mode 10 minutes after last key press
		5 MINUTES	Control panel display goes into sleep mode 5 minutes after last key press
		2 MINUTES	Control panel display goes into sleep mode 2 minutes after last key press
		ON	Control panel display permanently on
	DISPLAY INTENSITY	10 ... **100**	Set control panel display intensity in % (default = **100%**)
	DISPLAY ROTATION	ROTATE 180	Control panel display inverted
		NORMAL	Control panel display orientation normal
	DISPLAY CONTRAST	3 … **41** … 100	Set control panel display contrast (default = **41%**)
ERROR MODE	SILENT		Disable error messages and warnings in display (the status LED will still light to indicate fixture status if an error has been detected or the fixture has a warning)
	NORMAL		Enable error messages and warnings in control panel display
HIBERNATION MODE	ON		Enable Hibernation Mode (light output set to zero, all effects disabled)
	OFF		Disable Hibernation Mode

STANDALONE	OFFLINE MODE	RUN STAND-ALONE	When no control signal is present, fixture goes to stand-alone mode
		HOLD LAST LOOK	When no control signal is present, fixture shows last DMX values received
	STAND-ALONE MODE	**INDIVIDUAL**	Fixture shows its own stand-alone scene and ignores all external stand-alone synchronizing signals
		SYNC HOST	Fixture shows its stand-alone scene and sends synchronizing stand-alone signals to SYNCH HOST fixtures to make them show their own stand-alone scenes
		SYNC CLIENT	Fixture listens for synchronizing stand-alone signals from a SYNC HOST fixture and shows its own stored stand-alone scene when the SYNC HOST shows a stand-alone scene
	RECORD CURRENT LOOK	ARE YOU SURE? YES/NO	Stores current look as stand-alone scene
OUTPUT MODE	**HIGH OUTPUT**		Light output optimized for highest intensity
	HIGH QUALITY		Light output optimized for best quality
DEFAULT SETTINGS			
FACTORY DEFAULT	LOAD	ARE YOU SURE? → YES/NO	Return all settings (except calibrations) to factory defaults
CUSTOM 1	LOAD	ARE YOU SURE? → YES/NO	Load Custom Settings 1
	SAVE	ARE YOU SURE? → YES/NO	Save current settings as Custom Settings 1
CUSTOM 2	LOAD	ARE YOU SURE? → YES/NO	Load Custom Settings 2
	SAVE	ARE YOU SURE? → YES/NO	Save current settings as Custom Settings 2
CUSTOM 3	LOAD	ARE YOU SURE? → YES/NO	Load Custom Settings 3
	SAVE	ARE YOU SURE? → YES/NO	Save current settings as Custom Settings 3
INFORMATION			
POWER ON TIME	TOTAL	0 … XXX HR	Display number of hours fixture has been powered on since manufacture (not user-resettable)
	RESETTABLE	0 … XXX HR	Display number of hours fixture has been powered on since last counter reset
		CLEAR COUNTER? → YES/NO	Reset counter

POWER ON CYCLES	TOTAL	0 … XXX HR	Display number of times fixture has been powered on since manufacture (not user-resettable)
	RESETTABLE	0 … XX HR	Display number of times fixture has been powered on since last counter reset
		CLEAR COUNTER? → YES/NO	Reset counter
LED ON TIME	TOTAL	0 … XX HR	Display number of hours LEDs have been powered on since manufacture (not user-resettable)
	RESETTABLE	0 … XX HR	Display number of hours LEDs have been powered on since last counter reset
		CLEAR COUNTER? → YES/NO	Reset counter
FIRMWARE VERSION	XX.XX.XX		Display currently active firmware (fixture software) version
RDM UID	4D50.XXXXXXXX		Display fixture's unique RDM ID
FAN SPEEDS	FAN 1 ... FAN 3	0 … XXX RPM	Scroll to display current speed of cooling fans
TEMPERATURES (since last fixture reset)	UI…LED BOARD	CURRENT / MIN / MAX X C	Scroll through PCB temperature sensors, then display current, minimum and maximum temperature in °C of PCBs since fixture was last reset / powered on
DMX LIVE			
SOURCE	NO INPUT		DMX control data absent
	DMX		DMX control data present
RATE	0 – 44 Hz		DMX transmission speed in packets per second
QUALITY	0 – 100%		Percentage of packets received
START CODE	0 – 255		Value of DMX start code
SHUTTER STROBE … PWM FREQUENCY	XXX		Scroll to see values being received on each DMX channel

TEST			
TEST ALL	DIMMER … COLORS		Run test sequence of all functions. To test a specific function, use UP/DOWN buttons to scroll through functions. Press ENTER to pause and press again to restart test sequence. Press MENU button to exit test.
MANUAL CONTROL			
RESET			Reset fixture
STROBE … TINT			Scroll through effects, then manually control an effect
RECORD CURRENT LOOK	ARE YOU SURE? YES/NO		Stores current look as single-scene stand-alone show.
SERVICE			
ERROR LIST	Empty or up to 20 errors		Show all error and warning messages stored in memory
FAN CLEAN	**OFF**		Run cooling fans at high speed to help dislodge dust and debris
	ON		
FIXTURE-TO-FIXTURE FIRMWARE	UPLOAD VIA DMX512	STOP/START/ FORCE	Set fixture to upload its firmware to all the other fixtures of the same type on the data link
	UPLOAD SPEED	HIGH SPEED/HIGH STABILITY	Set firmware upload speed (high stability sends redundant data to improve data integrity)

Troubleshooting

This section describes a few common problems that may occur during operation and provides some suggestions for easy troubleshooting:

Symptom	Potential cause	Remedies
No light from fixture.	Power supply issue, such as blown fuse, faulty connector or damaged cable.	Ensure that the mains supply is connected and supplying power to the fixture. Ensure that the fixture's display screen lights up when a button is pressed. Check all power connections and cables.
Fixture does not respond correctly to DMX control.	Fault in the DMX network due to wiring problem, connector or cable damaged, or…	Check the status LED to the right of the control panel. A flashing LED indicates that DMX is not being received: • Check all DMX cables and connections to ensure the integrity of the physical network. • Ensure that the DMX network is terminated. • Check that the components in the DMX network all use standard DMX polarity.
	incorrect DMX addressing, or…	Ensure that the fixture is set to the correct DMX address, one that matches that set on the DMX control device. Check the pins on the connectors from the previous fixture in the DMX network. Attempt to control the fixture with another DMX control device.
	…potential interference from proximity to a high-voltage installation.	Move the fixture if it is being operated very close to an unshielded high-voltage installation.

ELP Manet 8f

Safety and Installation Manual

Martin®

Dimensions

All dimensions are given in millimeters.

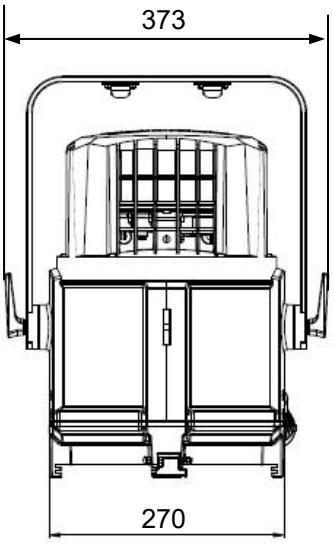

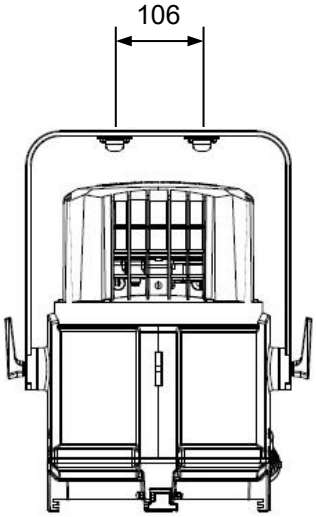

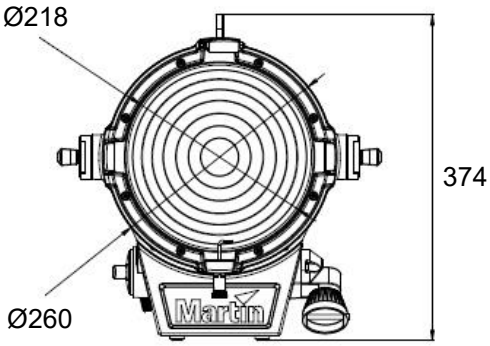

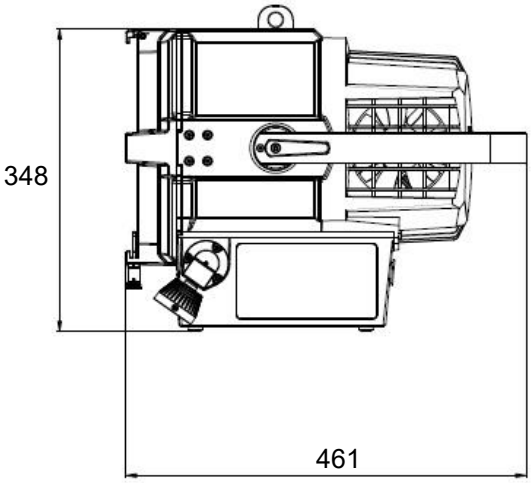

© 2025 HARMAN PROFESSIONAL DENMARK ApS. All rights reserved. Features, specifications and appearance are subject to change without notice. HARMAN PROFESSIONAL DENMARK ApS and all affiliated companies disclaim liability for any injury, damage, direct or indirect loss, consequential or economic loss or any other loss occasioned by the use of, inability to use or reliance on the information contained in this document. Martin is a registered trademark of HARMAN PROFESSIONAL DENMARK ApS registered in the United States and/or other countries.

HARMAN PROFESSIONAL DENMARK ApS, Olof Palmes Alle 44, 8200 Aarhus N, Denmark
HARMAN PROFESSIONAL, INC., 8500 Balboa Blvd., Northridge CA 91325, USA

www.martin.com

ELP Manet 8f Safety and Installation Manual English, Revision A, P/N 5154547-00

Table of contents

Dimensions 2
Safety information 4
Introduction 9
    Before using the product for the first time 9
Fixture overview 10
Physical installation 11
    Fixture location 11
    Using quarter-turn fasteners 11
    Fastening the fixture to a flat surface 11
    Mounting the fixture on a truss 12
    Securing with a safety cable 13
    Standing the fixture on a surface (yoke vertical) 13
AC power connection 14
    Linking fixtures to power in a chain 14
    Connecting to data 14
Service and maintenance 15
    Cleaning 15
    Installing a gel frame 15
    Installing a barndoors accessory 16
    Service and repairs 16
    Specifications 17
    Compliance 17
    Disposing of the product 17

Safety information

WARNING!

Read the safety precautions in this manual before installing, operating or servicing this product.

The following symbols are used to identify important safety information on the product and in this manual:

Warning!	**Warning!**	**Warning!**	**Warning!**	**Warning!**	**Warning!**
Safety hazard. Risk of severe injury or death.	***Hazardous voltage. Risk of lethal or severe electric shock.***	***Fire hazard.***	***Burn hazard. Hot surface. Do not touch.***	***Intense light emission.***	***See user documentation.***

Warning! Risk Group 2 product according to IEC/TR 62778 (see “Protection from eye injury” on page 6 for full details). Possibly hazardous radiation emitted from this product. May be harmful to the eyes. Do not stare directly into the light output from the product. Position the product so that prolonged staring into the product at a distance closer than 1.2 m (4 ft.) is not expected. Do not view the light output with optical instruments or any device that may concentrate the beam.

This lighting fixture is for professional use as a stage light only. It is not for household use. It presents risks of severe injury or death due to fire hazards, electric shock and falls. It can create a fire hazard or a risk of eye injury if the safety precautions below are not followed.

Respect all locally applicable laws, codes and regulations when installing, applying power to, operating or servicing the fixture.

Installation must be carried out by a qualified professional only. The safety and suitability of lifting equipment, installation location, anchoring method, mounting hardware and electrical installation are the responsibility of the installer.

The light source contained in this luminaire shall only be replaced by the manufacturer or his service agent or a similar qualified person.

The fixture is suitable for mounting at any height, including less than 1.2 m (3.9 ft.) and more than 5 m (16.4 ft.) above ground or floor level.

Do not operate the fixture at an altitude of more than 2000 m (6570 ft.) above sea level.

Install, operate and service this product only as directed in its safety and user manuals, or you may create a safety hazard or cause damage that is not covered by product warranties. Follow the safety precautions listed below and observe all warnings in this manual and printed on the product. Keep this manual for future use. For the latest user documentation and other information about this and all Martin products, please visit the Martin website at http://www.martin.com

Technical Support

If you have questions about how to install or operate the fixture safely, please contact Harman Professional Technical support:

- For technical support in North America, please contact:
  HProTechSupportUSA@harman.com
  Phone: (844) 776-4899
- For technical support outside North America, please contact your national distributor.

Protection from electric shock

Do not expose the fixture to rain or moisture. Do not immerse the fixture in water or any other fluid. Do not install the fixture in a location where flooding may occur.

Ensure that the fixture is electrically connected to ground (earth).

Disconnect the fixture from AC power when not in use.

Isolate the fixture from power immediately if any seal, cover, cable, or other component is damaged, defective, deformed or showing signs of overheating. Do not reapply power until repairs have been completed.

Do not open the fixture or remove any cover. Refer any service operation not described in this manual to an authorized Martin Service partner.

Shut down power to the entire installation at the main power distribution board and lock out power before carrying out any installation or maintenance work.

Use only a source of AC mains power that complies with local building and electrical codes and has both overload and ground-fault (earth-fault) protection.

To connect the fixture to AC mains power, you must first obtain 16 AWG or 1.5 mm^2 power input cable that is 8 A rated. If you intend to connect devices to AC mains power by creating a daisy chain of interconnected devices, you must obtain 12 AWG or 2.5 mm^2 power input cable that is 16 A rated.

In the USA and Canada, power input and power relay cables must be UL-listed, type SJT or better. In the EU, the cables must be type H05RN-F or better. Suitable cables with the correct connectors are available from Martin.

The fixture has a typical total power consumption of 530 W.

The fixture draws a maximum total current of:

- 5.3 A when connected to mains power at 100-120 V~
- 2.5 A when connected to mains power at 208 V~
- 2.2 A when connected to mains power at 230-240 V~

Do not connect a device – or an interconnected daisy chain of devices – to power if the maximum resulting current draw will exceed the electrical ratings of any cable or connector used to supply power.

Before connecting any devices to the fixture's MAINS THRU/OUT connector, check the maximum current draw of all the devices that you will connect to power in a chain. Do not exceed a total of 16 amps maximum when you add together the current draw for the entire chain, including the first device in the chain.

If you relay power from one ELP Manet 8f fixture to another by connecting one fixture's MAINS THRU/OUT connector to the next fixture's MAINS IN connector, observe the following safety limits:

- Do not connect more than three (3) ELP Manet 8f fixtures <u>in total</u> to each other in a daisy chain when supplying the fixture with mains power from 100 V to 120 V.
- Do not connect more than three (3) ELP Manet 8f fixtures <u>in total</u> to each other in a daisy chain when supplying the fixture with mains power at 208 V.
- Do not connect more than five (5) ELP Manet 8f fixtures <u>in total</u> to each other in a daisy chain when supplying the fixture with mains power from 230 V to 240 V.

The fixture draws a typical half-cycle RMS inrush current of 12.7 A for the first 10 milliseconds when mains power is first applied to the fixture at 230 V~, 50 Hz.

The voltage and AC frequency of the power at the fixture's MAINS OUT connector are the same as those applied at the MAINS IN connector.

Before using the fixture, check that all power distribution equipment and cables are in perfect condition, are rated for the current requirements of all connected devices, and are of suitable type for the location (including water, pollution, temperature and UV resistance).

The fixture's DMX transceiver is isolated/SELV to prevent ground loops and for safety reasons.

Protection from burns and fire

Do not operate the fixture if the ambient temperature (Ta) exceeds 40° C (104° F).

The surface of the fixture can reach up to 68° C (155° F) if the fixture is operated at the maximum permitted ambient temperature. Allow the fixture to cool for at least 5 minutes before handling.

Install the fixture on a non-combustible surface (brick, concrete, plaster etc.) only.

Keep a minimum distance of 50 cm (19 in.) between the fixture and combustible materials (fabric, wood, paper etc.).

Do not aim light from the fixture at any surface that is less than 1 m (3.3 ft.) from the fixture.

Keep the fixture well away from flammable materials (volatile liquids etc.).

Do not expose the front glass to sunlight or any other strong light source from any angle. Lenses can focus the sun's rays inside the fixture, creating a potential fire hazard.

Ensure that there is free and unobstructed airflow around the fixture.

Allow at least 0.2 m (8 in.) free space around the fixture.

Do not attempt to bypass thermostatic switches or fuses.

Do not modify the fixture in any way not described in this manual or install other than genuine Martin parts. Do not stick filters, masks or other materials onto any lens or other optical component. Use only accessories approved by Martin to modify the light beam.

Protection from eye injury

Do not look directly into the product's light output.

Do not look at operating lamp. Eye injury may result.

Do not look at the light output with magnifiers, telescopes, binoculars or similar optical instruments that may concentrate the light output.

Ensure that persons are not looking directly into the front of the fixture when the product lights up suddenly. This can happen when power is applied, when the product receives a DMX signal, or when certain control menu items are selected.

To minimize the risk of eye irritation or injury, disconnect the fixture from power at all times when the fixture is not in use and provide well-lit conditions to reduce the pupil diameter of anyone working on or near the fixture.

This fixture corresponds to Risk Group 2 for blue light only according to IEC/TR 62778. It emits possibly hazardous optical radiation. It falls into the Risk Group categories shown below according to IEC/TR 62778 under worst-case conditions.

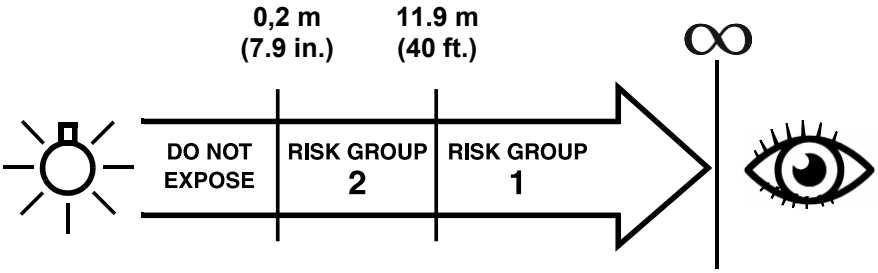

At a distance of less than 0.2 m (7.9 in.) from the fixture, the light output can potentially cause eye or skin injury before an exposed person's natural aversion responses (blink reflex and reaction to skin discomfort) can protect them. At distances greater than 0.2 m (7.9 in.), potential eye and skin injury hazards from the light output are normally prevented by natural aversion reflexes.

Position the fixture so that persons cannot be exposed to the fixture's light output at a distance of less than 0.2 m (7.9 in.) from the fixture, and so that prolonged staring into the light output at less than 11.9 m (40 ft.) from the fixture is not expected.

Protection from injury

Fasten the fixture securely to a fixed surface or structure as described in this manual when in use. Do not stand it on a surface where it may fall over or present a hazard.

The fixture is not portable when installed.

Before installing, check that the supporting structure can safely bear at least six times (or more if required by locally applicable regulations) the weight of all fixtures and equipment to be installed on it. Block access below the work area installing overhead.

In marine applications and other environments where movement or vibration may be present, the fixture must be fastened to a rigging truss or other structure by means of an omega bracket bolted to the fixture's yoke and a rigging clamp that completely encircles the truss chord or pipe such as a half-coupler clamp. Do not use a rigging clamp bolted directly to the fixture's yoke. Do not use a G-clamp or other clamp with open jaws.

If the fixture is installed in a location where it may cause injury or damage if it falls, install as described in this manual a secondary attachment such as a safety cable that is approved by an official body such as TÜV as a safety attachment for the weight that it secures. The safety cable must comply with EN 60598-2-17 Section 17.6.6 or BGV C1 / DGUV 17, and must be capable of bearing a static suspended load at least six times (or more if required by locally applicable regulations) the weight that it secures.

Eliminate as much slack as possible in the safety cable (by looping it more than once around the rigging truss, for example). Make sure that, if the primary attachment fails, the fixture cannot fall more than 20 cm (8 inches) maximum before the safety cable catches it.

If the safety cable attachment point becomes deformed, do not suspend the fixture. Have the fixture repaired by an authorized Martin service partner.

The fixture may be fastened to a surface with its yoke hanging vertically downwards or standing vertically only. Do not try to fasten the fixture to a surface with its yoke at any other angle than vertical.

If you fasten the fixture's yoke directly to a surface, use fasteners that are strong enough and of a suitable type for the application and environment. Install a washer directly under the head of each fastener. All fasteners used must be grade 8.8 steel minimum. Bolts must be fastened with self-locking nuts.

Ensure that any accessories such as gel frames and barn doors are securely fastened.

Block access below the work area and work from a stable platform whenever installing, setting, adjusting, or cleaning the fixture.

Do not operate the fixture with missing or damaged covers, shields or any optical component.

If an operating problem occurs, stop using the fixture immediately and disconnect it from power. Do not attempt to use a fixture that is obviously damaged.

Introduction

The ELP Manet 8f from Martin® is an LED wash lighting fixture with a 500W RGBALC COB LED engine with exceptional color rendering properties.

The fixture can be controlled using any DMX-compliant controller and can be remotely configured by RDM. It also features stand-alone operation with capacity for up to 16 scenes.

The fixture is supplied with the following items:

- This safety and installation manual
- Yoke (U-shaped mounting bracket) for fastening to a structure by means of suitable user-supplied rigging hardware.
- Frame for color filters
- Barndoor module.

Before using the product for the first time

1. Read ‘Safety information’ on page 4 before installing, operating or servicing the fixture.
2. Unpack and ensure that there is no transportation damage before using the fixture. Do not attempt to operate a damaged fixture.
3. Before operating, ensure that the voltage and frequency of the power supply match the power requirements of the fixture.
4. Connect the fixture to AC mains power either by hard-wiring it or by using a suitable power cable and connector that is suitable for the local power outlets.
5. If fixtures are exposed to a sudden temperature change, give them time to warm or cool to the ambient temperature before applying power. This will help avoid damage due to condensation.
6. Check the support pages on the Martin website at www.martin.com for the most recent user documentation and technical information about the fixture. Martin user manual revisions are identified by the revision letter at the bottom of the inside cover.

Fixture overview

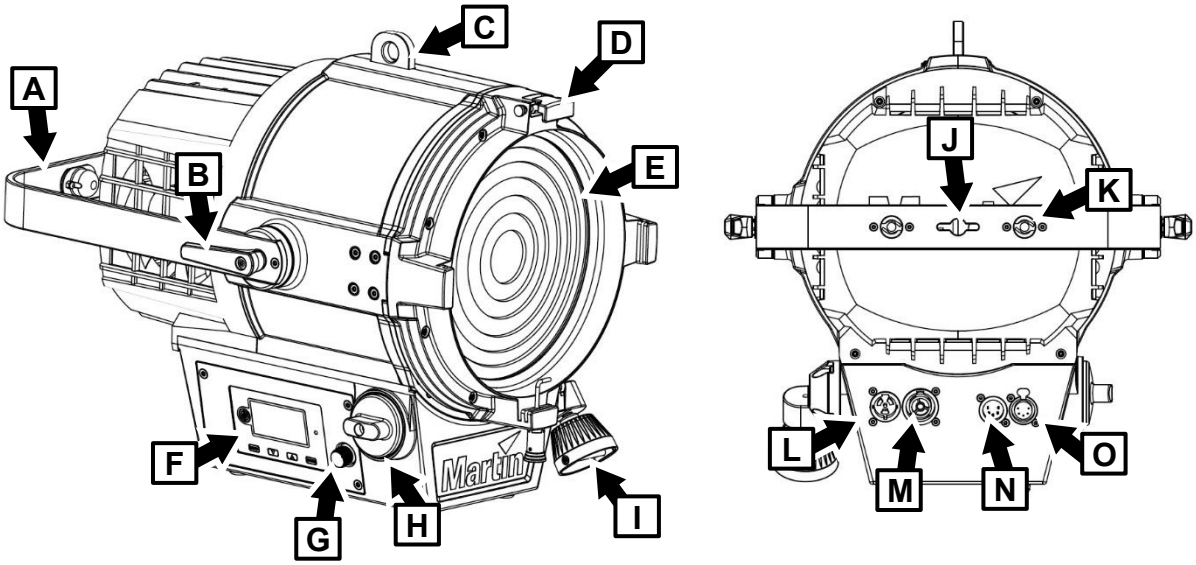

A – Yoke (mounting bracket)

B – Tilt locking handle

C – Safety cable attachment point

D – Filter holder clip (x4)

E – Front lens

F – Control panel with backlit display, NFC sensor

G – Multifunction control knob

H – Zoom adjustment knob

I – Zoom adjustment cup

J – Hole for rigging clamp or surface mounting bolt

K – Quarter-turn fastener attachment point

L – AC MAINS IN connector (Neutrik powerCON TRUE1 male)

M – AC MAINS THRU/OUT connector (Neutrik powerCON TRUE1 female)

N – DMX IN connector (5-pin XLR male)

O – DMX THRU/OUT connector (5-pin XLR female)

Physical installation

Warning! Read ‘Safety information’ on page 4 before installing the fixture.

Contact your Martin supplier for assistance if you have any questions about how to install this product safely.

Fixture location

The fixture is intended for interior use only. Do not install outside or in damp or humid locations. Respect the limitations given under ‘Safety information’ on page 4. The fixture requires free and unobstructed airflow around it to ensure adequate cooling. Do not locate it in an unventilated space.

Warning! See drawing on right. Lenses can focus sunlight and strong light, presenting a risk of fire and damage to the fixture, creating a potential fire hazard and causing damage. Position or shade the head so that the front lens will not be exposed to sunlight or another strong light source from any angle – even for a few seconds.

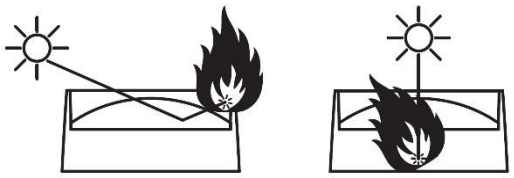

Important! Do not point the output from other lighting fixtures at the fixture, as powerful light can damage the display.

Using quarter-turn fasteners

When fastening an omega clamp to the fixture’s yoke, use both quarter-turn fasteners.

See drawing on right. Turn quarter-turn fasteners a full 90° clockwise to lock.

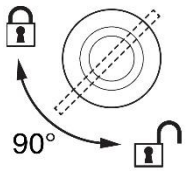

Fastening the fixture to a flat surface

The fixture may be installed on a fixed, flat surface with its mounting yoke hanging vertically or standing vertically only. It may be installed by fastening its mounting yoke directly to the surface or by fastening an omega bracket to its mounting yoke and fastening the omega bracket to the surface.

To fasten the fixture to a surface by bolting its yoke directly to the surface:

1. Pass an M12 bolt, screwbolt or similar fastener through the hole in the center of the yoke and fasten the yoke securely to the surface with the fixture aimed towards the area that it must illuminate.
2. If there is a risk that the fixture may cause injury or damage if the mounting fails, secure it with a safety cable as described in ‘Securing with a safety cable’ on page 13.
3. Loosen both of the tilt locking handles, adjust tilt, then retighten the handles.

To fasten the fixture to a surface by bolting its yoke directly to the surface:

1. Pass an M12 bolt, screwbolt or similar fastener through the hole in a correctly dimensioned omega bracket and fasten the bracket securely to the surface so that the fixture, when mounted, will be aimed towards the area that it must illuminate.
2. Fasten the fixture’s mounting yoke onto the omega bracket using the two quarter-turn fastener points in the yoke.
3. If there is a risk that the fixture may cause injury or damage if the mounting fails, secure it with a safety cable as described in ‘Securing with a safety cable’ on page 13.
4. Loosen both of the tilt locking handles, adjust tilt, then retighten the handles.

Mounting the fixture on a truss

Warning! You must use an omega bracket and half-coupler clamp or similar rigging clamp that completely encircles the truss chord in installations that may be subject to movement or vibration such as marine applications (see ‘Safety information’ on page 4).

Installation hanging vertically downwards

The fixture can be fastened to a horizontal truss or pipe ***hanging vertically downwards only***, using either:

- a suitable approved rigging clamp bolted directly to the fixture’s yoke, or
- a standard 28 mm spigot and compatible rigging hardware, or
- an omega bracket fastened to the fixture’s yoke with quarter-turn fasteners and rigging clamp bolted to the omega bracket.

Installation hanging vertically downwards with a rigging clamp

To install the fixture hanging vertically downwards from a horizontal truss or pipe using a rigging clamp:

1. Bolt a suitable rigging clamp securely to the fixture’s mounting yoke, bearing in mind the need to aim the fixture at the object or area to be illuminated.
2. Working from a stable platform, fasten the clamp to the truss chord or pipe with the fixture hanging vertically downwards and aimed at the area to be illuminated.
3. If there is a risk that the fixture may cause injury or damage if it falls, secure it with a safety cable as described in ‘Securing with a safety cable’ on page 13.
4. Loosen the tilt locking handles, adjust tilt, then retighten the handles.

Installation hanging vertically downwards with a 28 mm spigot

The fixture’s yoke accepts a standard 28 mm spigot accessory (available from Martin suppliers). The spigot can be used together with compatible rigging hardware to suspend the fixture hanging vertically downwards only. To suspend the fixture from a horizontal truss or pipe using a 28 mm spigot:

1. Pass the spigot through the hole in the center of the fixture’s yoke and fasten it securely with a self-locking nut that is in perfect condition.
2. Working from a stable platform, fasten the spigot to compatible rigging hardware with the fixture hanging vertically downwards and aimed at the area to be illuminated.
3. If there is a risk that the fixture may cause injury or damage if it falls, secure it with a safety cable as described in ‘Securing with a safety cable’ on page 13.
4. Loosen the tilt locking handles, adjust tilt, then retighten the handles.

Installation hanging vertically downwards with an omega bracket and rigging clamp

To install the fixture hanging vertically downwards from a horizontal truss or pipe using an omega bracket and rigging clamp:

1. Bolt a suitable rigging clamp securely to a 106 mm center-to-center omega bracket using a self-locking nut.
2. Fasten the omega bracket to the fixture’s mounting yoke, turning quarter-turn fasteners a full 90° clockwise to lock them.
3. Working from a stable platform, fasten the rigging clamp to the truss chord or pipe with the fixture hanging vertically downwards and aimed at the area to be illuminated.
4. If there is a risk that the fixture may cause injury or damage if it falls, secure it with a safety cable as described in ‘Securing with a safety cable’ on page 13.
5. Loosen the tilt locking handles, adjust tilt, then retighten the handles.

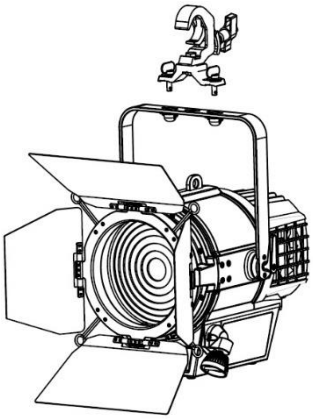

Securing with a safety cable

If there is a risk that the fixture may fall and cause injury or damage, secure it with a safety cable (or similar secondary attachment) that is approved for the weight that it will secure and in perfect condition. Fasten the safety cable to the safety cable attachment point on top of the fixture and then loop it around the truss chord or pipe (or other secure anchoring point) as shown in the drawing on the right.

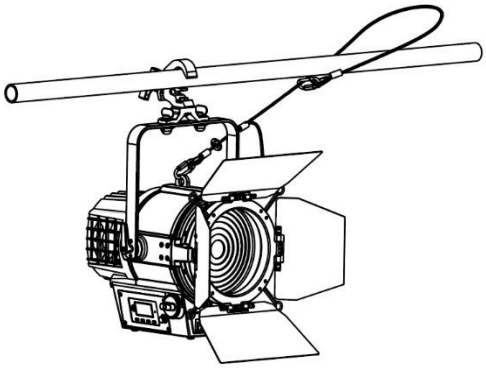

Remove as much slack as possible from the safety cable (by looping it more than once around the truss chord, for example). Make sure that the safety cable will hold the fixture safely if the primary attachment fails.

If a safety cable attachment point becomes damaged or deformed, do not use the fixture. Return it to a Martin Service Centre for repair.

Standing the fixture on a surface

It is possible to install the fixture on a fixed, flat surface with its mounting yoke standing vertically upwards only using a standard 28 mm spigot and tripod or similar secure mounting hardware. Do not install the fixture with the yoke at any other angle.

Warning! Make sure that the fixture and mounting hardware will not present a danger of tripping or falling.

To stand the fixture on a surface:

1. Fasten a standard 28 mm spigot to the fixture's mounting yoke by passing it through the hole in the center of the yoke and securing it with a self-locking nut.
2. Fasten the spigot to a compatible tripod or other secure mounting stand.
3. Place the stand in a location where it will not present a hazard due to tripping, falling etc. If you locate the stand where there is a risk that the fixture may cause injury or damage if the mounting fails, secure it with a safety cable as described in 'Securing with a safety cable' above.
4. Loosen both the tilt locking handles, adjust tilt, then retighten the handles.

Connecting to AC power

Warning! Read ‘Safety information’ on page 4 before installing the fixture.

Warning! If you want to connect other devices to the MAINS OUT socket, see ‘Linking fixtures to power in a chain’ below.

For protection from electric shock, the fixture must be grounded (earthed). The power distribution circuit must be equipped with a fuse or circuit breaker and ground-fault (earth-fault) protection.

Do not use an external dimming system to supply power to the fixture, as this may cause damage to the fixture that is not covered by the product warranty.

The fixture can be hard-wired to a building electrical installation if you want to install it permanently, or a power plug that is suitable for the local power outlets can be installed on the power input cable. Socket outlets or external power switches used to supply the fixture with power must be located near the fixture and easily accessible so that the fixture can easily be disconnected from power.

If you install a power plug on the power input cable, install a grounding type (earthed) plug with integral cable grip that is suitable for your local mains voltage, rated 16 A and has an integral strain relief/cord grip. Follow the plug manufacturer’s instructions and connect the wires in the power cable as shown in this table:

	Live or L	**Neutral or N**	**Earth, Ground or ⏚**
US system	Black	White	Green
EU system	Brown	Blue	Yellow/green

The fixture has an auto-ranging power supply that accepts AC mains power at 100-240 V at 50/60 Hz. Do not apply AC mains power at any other voltage or frequency to the fixture.

Linking fixtures to power in a chain

If you want to use the MAINS OUT socket on the fixture to link power to another fixture in a daisy-chain, you must connect the first fixture to power using a 16 amp rated 12 AWG / 2.5 mm^2 power input cable. To link the following fixtures to power in a daisy-chain, use 16 amp rated 12 AWG / 2.5 mm^2 power relay cables to link fixtures’ MAINS OUT sockets to MAINS IN sockets. Martin can supply a range of suitable power relay cables. If you create custom power relay cables, use only Neutrik PowerCON TRUE1 connectors.

Warning! Do not exceed the limits for the number of fixtures in a daisy chain given in the ‘Safety Precautions’ chapter at the beginning of this Safety and Installation Manual.

Connecting to data

See the ELP Manet 8f User Manual available for download from www.martin.com for details of connecting the fixture to a DMX-512 control data link.

Service and maintenance

Warning! Read ‘Safety information’ on page 6 before servicing the fixture.

Refer any service operation not described in this user manual to a qualified service technician.

Excessive dust, smoke fluid, and particle buildup degrades performance, causes overheating and will damage the fixture. Damage caused by inadequate cleaning or maintenance is not covered by the product warranty.

Disconnect mains power before cleaning or servicing the fixture.

Service fixtures in an area where there is no risk of injury from failing parts, tools or other materials.

Cleaning

The cleaning of external optical lenses must be carried out periodically to optimize light output. Cleaning schedules for lighting fixtures vary greatly depending on the operating environment. It is therefore impossible to specify precise cleaning intervals for the fixture. Environmental factors that may result in a need for frequent cleaning include:

- Use of smoke or fog machines.
- High airflow rates (near air conditioning vents, for example).
- Presence of cigarette smoke.
- Airborne dust (from stage effects, building structures and fittings or the natural environment at outdoor events, for example).

If one or more of these factors is present, inspect fixtures within their first 100 hours of operation to see whether cleaning is necessary. Check again at frequent intervals. This procedure will allow you to assess cleaning requirements in your particular situation. If in doubt, consult your Martin dealer about a suitable maintenance schedule.

Use gentle pressure only when cleaning, and work in a clean, well-lit area. Do not use any product that contains solvents or abrasives, as these can cause surface damage.

To clean the fixture:

1. Disconnect the fixture from power and allow it to cool for at least 10 minutes.
2. Vacuum or gently blow away dust and loose particles from the outside of the fixture and the air vents at the back and sides of the head and in the base with low-pressure compressed air.
3. Clean the front glass by wiping gently with a soft, clean lint-free cloth moistened with a weak detergent solution. Do not rub the surface hard: lift particles off with a soft repeated press. Dry with a soft, clean, lint-free cloth or low-pressure compressed air. Remove stuck particles with an unscented tissue or cotton swab moistened with glass cleaner or distilled water. You can remove the lens tube to clean the rear side of the lens if needed.
4. Check that the fixture is dry before reapplying power.

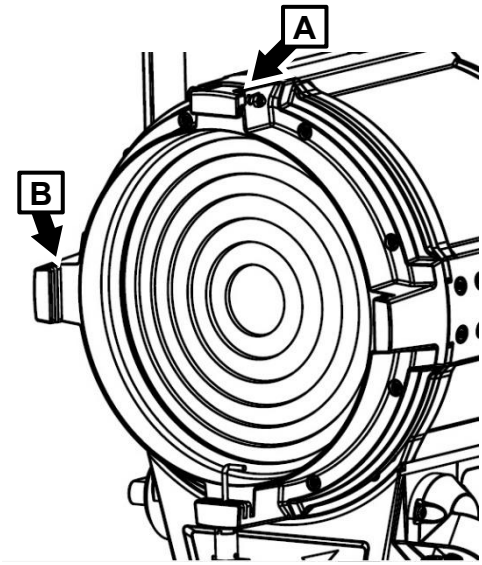

Installing a gel frame

The ELP Manet 8f is supplied with a frame for color filters that can be installed in front of the lens.

To install the filter frame:

1. See drawing on right. Flip the top accessory lock **A** up to open it.
2. Slide the filter frame into the arms on the front of the fixture. The arms have two slots **B** in them. Slide the frame into the slots *closer to* the front lens.
3. Close the top lock **A** and check that the filter frame is secure and cannot fall off the front of the fixture.

Installing a barndoors accessory

The fixture is supplied with a four-leaf barndoors module that can be installed on the front of the fixture.

To install the barndoors module:

1. See drawing on previous page. Flip the top accessory lock **A** up to open it.

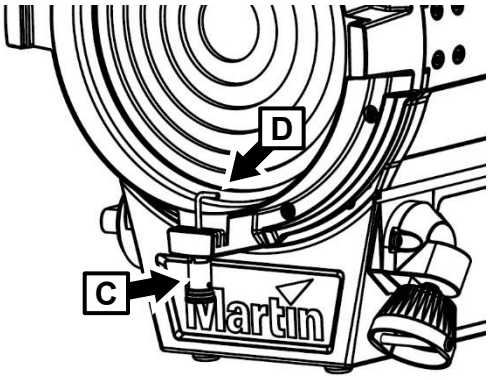

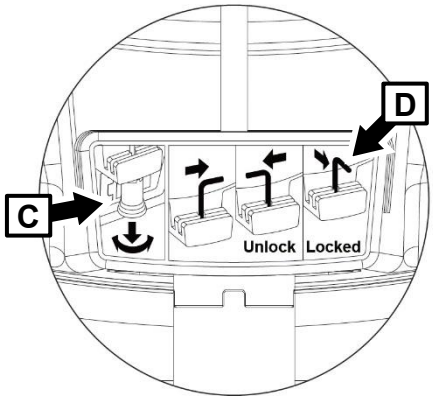

2. See drawings above. Pull the handle **C** of the bottom accessory lock down slightly and twist it to move the leg **D** of the lock either to the side or towards the front lens.
3. Slide the barndoors module into the arms on the front of the fixture. The arms have two slots **B** in them (see drawing on previous page). Slide the frame into the slots *further away from* the front lens.
4. Close the top accessory lock.
5. Pull the handle **C** of the bottom accessory lock down slightly and twist it to move the leg **D** of the lock towards the front of the fixture so that it locks the barndoors module in place.
6. Check that the barndoors module is held securely and cannot fall off the front of the fixture.
7. Rotate the barndoors and open the leaves to adjust them.

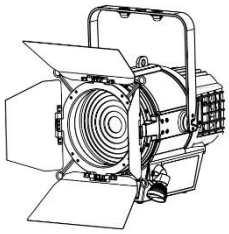

Service and repairs

There are no user-serviceable parts inside the fixture. Do not open the housing.

Do not try to repair the fixture by yourself as this may result in damage, malfunction and it may potentially void your product warranty. The equipment must only be serviced or repaired by an authorized Martin service technician.

Installation, on-site service and maintenance can be provided worldwide by the Martin Professional Global Service organization and its approved agents, giving owners access to Martin's expertise and product knowledge in a partnership that will ensure the highest level of performance throughout the product's lifetime. Please contact your Martin supplier for details.

Specifications

For the latest product specifications for this fixture, see the ELP Manet 8f area of www.martin.com.

Compliance

FCC Compliance

This equipment has been tested and found to comply with the limits for a Class B digital device, pursuant to part 15 of the FCC Rules. These limits are designed to provide reasonable protection against harmful interference when the equipment is operated in a commercial environment. This equipment generates, uses and can radiate radio frequency energy and, if not installed and used in accordance with the instructions, may cause harmful interference to radio communications. Operation of this equipment in a residential area is likely to cause harmful interference, in which case the user will be required to correct the interference at his own expense.

Supplier's Declaration of Conformity

Harman Professional, Inc. have issued an FCC Supplier's Declaration of Conformity for this product. The Declaration of Conformity is available for download from the ELP Manet 8f product area of the Martin website at www.martin.com.

Canadian Interference-Causing Equipment Regulations – Règlement sur le Matériel Brouilleur du Canada

This Class B digital apparatus meets all requirements of the Canadian Interference-Causing Equipment Regulations. – *Cet appareil numérique de la classe B respecte toutes les exigences du Règlement sur le Matériel Brouilleur du Canada.*

CAN ICES (B) / NMB (B)

EU Declaration of Conformity

An EU Declaration of Conformity covering this product is available for download from the ELP Manet 8f product area of the Martin website at www.martin.com.

Disposing of the product

Martin products are supplied in compliance with Directive 2012/19/EC of the European Parliament and of the Council of the European Union on WEEE (Waste Electrical and Electronic Equipment), where applicable.

Help preserve the environment! Ensure that this product is recycled at the end of its life. Your supplier can give details of local arrangements for the disposal of Martin products