EXTERIOR PROJECTION PRO COMPACT

OUTDOOR-RATED CONFIGURABLE IMAGE PROJECTOR

SPEC SHEET

The **Martin Exterior Projection Pro Compact** is a next-generation outdoor fixture for architectural and landscape applications. Versatile and efficient, it supports 11 configurations with up to four layers of effects, including precise façade framing. The built-in zoom system adjusts angles from 15° to 45°, delivering 5,200 lumens consistently. Dynamic effects include zoom, focus, colors, gobos, and animations. Using the optional framing module, the projected image can be framed to precisely match the façade. Managed via smart controls (magnetic switch, DMX, RDM, and Martin Companion), it's fully outdoor-rated and backed by a 5-year warranty. Its modular design, compact form, and advanced features make it ideal for lighting designers offering incredibly creative image projection for outdoor spaces.

KEY MESSAGES

VERSATILE CONFIGURATION

The **Exterior Projection Pro Compact's** accessory effect modules adapt to the unique needs of each application, providing a cost-efficient and lightweight solution.

PRECISE BEAM CONTROL WITH FLAT FIELD

The built-in zoom system enables precise adjustment of the 15° to 45° projection angle, ensuring easy positioning and optimal surface coverage. The projected image maintains a flat field with high contrast.

SMART CONTROL OPTIONS

Magnetic switch, DMX, RDM, and stand-alone programming via Martin Companion offer straightforward configuration and programming. The fixture also features a dedicated hibernation power mode, activated via the DMX control channel, significantly reducing power consumption when inactive.

COMPACT AND ATTRACTIVE DESIGN

With its compact footprint and low weight, the fixture can be pole-mounted and integrated into various setups, delivering multiple applications.

HIGHLY-EFFICIENT OPTICAL SYSTEM

The efficient optical system ensures full lumen maintenance across the zoom range. The optional framing module allows the projected image to be framed to precisely match the façade.

DESIGNED FOR REAL-WORLD CONDITIONS

Engineered to meet stringent environmental standards, the fixture reduces its carbon footprint through its efficient optical system, FSC-certified packaging, and full repairability. It is fully outdoor-rated to withstand harsh environmental conditions and is backed by Martin's full 5-year warranty.

HARMAN PROFESSIONAL INC. ▪ 8500 BALBOA BOULEVARD ▪ NORTHRIDGE ▪ CA 91329 ▪ USA ▪ +1 818 893 8411

©2026 HARMAN Professional. All rights reserved. Martin® is a registered trademark of HARMAN Professional Inc. registered in the United States and/or other countries.
Features, specifications, and appearance are subject to change without notice.

REV: 20260825

EXTERIOR PROJECTION PRO COMPACT

OUTDOOR-RATED CONFIGURABLE IMAGE PROJECTOR

SPEC SHEET

FEATURES

- Flat-field, high-contrast image projection
- 5,200 lumens output across the entire zoom range
- Efficient optical system with integrated 15° - 45° zoom system
- Configurable design for reduction of resources, cost, and weight
- One gobo or four gobo modules
- Animation module
- Manual framing module for precise framing of projected image
- 0-100% electronic dimming
- Hibernation mode for very low power consumption
- Compact and slim design
- RDM and DMX control
- Local diagnostics and focusing via magnetic sensor
- Dedicated compartment for install of Power and DMX In/Out cables
- Optional PD Hybrid In/Out cable solution
- Automatic thermal management for safe operation in high and low ambient temperatures
- Fully-weatherized housing (IP66, IK08 and C-5 High corrosion rating)
- Shipped in FSC-certified cardboard packaging
- 5-year warranty

RELATED ITEMS

- Martin Companion Cable
  (for firmware update over DMX)..... P/N 91616091
- Martin Companion Software: free download from www.martin.com

ORDERING INFORMATION

FIXTURES

- Exterior Projection Pro Compact, Grey: MAR-90560250
- Exterior Projection Pro Compact, White: MAR-90560251
- Exterior Projection Pro Compact, Black: MAR-90560252

ACCESSORY MODULES

- Manual framing module: MAR-90560260
- Animation Module: MAR-90560261
- One gobo holder module: MAR-90560262
- Four gobo wheel module: MAR-90560263

RELATED ITEMS

- Glareshield Black: MAR-90560264
- Exterior Multitool: MAR-90590025
- Attachment plate for safety wire: MAR-90590050
- Hybrid PD cable tail In/Out 0.5 m, black: MAR-91700020
- Junction Box Power DMX to PD: MAR-91700019
- Gobo ring D19 EP Compact - set of 10: MAR-90560270
- Animation wheel w open hole - set of 5: MAR-90560271

HARMAN PROFESSIONAL INC. ▪ 8500 BALBOA BOULEVARD ▪ NORTHRIDGE ▪ CA 91329 ▪ USA ▪ +1 818 893 8411

©2026 HARMAN Professional. All rights reserved. Martin® is a registered trademark of HARMAN Professional Inc. registered in the United States and/or other countries.
Features, specifications, and appearance are subject to change without notice.

REV: 20260825

EXTERIOR PROJECTION PRO COMPACT

OUTDOOR-RATED CONFIGURABLE IMAGE PROJECTOR

SPEC SHEET

TECHNICAL SPECIFICATIONS

DYNAMIC EFFECTS

Color wheel ..... 5 dichroic colors (red, green, blue, yellow, CTO) + open
Accessory 1-gobo module ..... indexing, variable rotation
Accessory 4-gobo module ..... selection, indexing, variable rotation
Accessory animation module ..... Continuous rotation with variable speed and direction (always in aperture)
Accessory Framing module ..... 4 blades for manual adjustment of insert and angle (8 finger knobs with locking mechanism)
Dimming ..... Electronic, 0-100% continuous dimming
Shutter ..... Strobe and pulse effects, instant open and blackout
Focus ..... Motorized, variable 3 m (9.8 ft.) to infinity
Zoom ..... Motorized, 15° - 45° beam angle

CONTROL AND PROGRAMMING

Control options ..... DMX, RDM, stand-alone
Stand-alone control ..... Up to 20 scenes with individual fade/ hold times
Configuration, addressing and status .. Via RDM
User interface ..... Magnetic sensor to call up fixture status and focus fixture
8-bit control ..... Color and gobo selection
16-bit control ..... Gobo indexing and rotation, Animation, Focus, Zoom and Intensity
DMX compliance ..... USITT DMX512-A
RDM compliance ..... ANSI/ESTA E1.20
DMX channels ..... 13/14 (Basic / Extended)

OPTICS

Full zoom range ..... 15° - 45° (Field Angle)
Light source ..... 130W White light LED engine
LED lifetime ..... minimum 30,000 hours (to >70% luminous output)*

**Figure obtained under manufacturer's test conditions*

PHOTOMETRIC DATA

CRI (Color Rendering Index) ..... >70
Color temperature ..... 7,000 K
Fixture Luminous Output ..... 5,200 lumens
Light Engine Luminous Output ..... 13,000 lumens
LED Refresh Rate ..... 2,400 Hz.

** All Photometric Data measured in steady state (30 minutes warm-up time) at 25°C ambient*

CONSTRUCTION

Housing ..... Cast aluminum
Finish ..... Hard anodized
Color Options ..... Traffic Grey RAL 7042, Traffic White RAL 9016, Traffic Black RAL 9017
Service Lid ..... For gobo change or insert of accessory effect modules
Front glass ..... 5 mm (0.2 in.) anti-reflection coated tempered glass
Ingress protection IP66
Impact resistance IK08
Corrosion resistance ..... C5 (very high corrosivity / marine, ISO 12944)
EPA (Effective Projected Area) 0.1 m2
Vibration resistance ..... 1.0g, Sinusoidal (IEC 60068-2-6) 0.7g, RMS Random (IEC 60068-2-64), 3.0g, (ANSI C136-31)

GOBOS

Suitable material ..... Borosilicate glass, coatings heat-resistant to 450°C (842° F)
Alternative material ..... Aluminum 1060, paint on front lens side, 450° C (842° F)
Gobo diameter ..... 19.0 mm +0/-0.3 mm (0.74 in. +0/-0.02 in.)
Maximum image diameter ..... 15 mm (0.59 in.)
Glass gobo thickness, minimum ..... 1.1 mm ±0.1 mm (0.045 ±0.004 in.)
Glass gobo thickness, maximum ..... 3.0 mm ±0.3 mm (0.12in. ± 0.012 in.)
Aluminum gobo thickness ..... 0.5 mm ± 0.02 mm (0.020 in. ± 001 in) HT paint

INSTALLATION

Mounting ..... Adjustable yoke
Location ..... Suitable for wet locations. Do not immerse in water.
Orientation ..... Any, except horizontal angles above 70°
Minimum distance to illuminated surfaces ..... 0.5 m (20 in.)

CONNECTIONS

Power cable entry ..... IP68 cable gland (accepts 8 mm-12 mm)
Power connection ..... Terminal for power in separate compartment
Data cable entry ..... IP68 cable gland (accepts 8 mm-12 mm)
Data connection ..... Terminal for data in separate compartment

ELECTRICAL

AC power ..... 100-240/277 V nominal, 50/60 Hz
Power Supply ..... Auto-ranging electronic switch-mode
Surge protection ..... 4 KV
Max earth-leakage current ..... 0.4 mA
Power factor ..... 0.98 @ 110 V / 0.96 @ 230 V, 0.91 @ 277 V
Max current draw ..... 1.68 A @ 110 V, 0.81 A @ 230 V, 0.69 A @ 277 V
Typical current draw ..... 1.48 A @ 110 V, 0.71 A @ 230 V, 0.63 A @ 277 V

HARMAN PROFESSIONAL INC. ▪ 8500 BALBOA BOULEVARD ▪ NORTHRIDGE ▪ CA 91329 ▪ USA ▪ +1 818 893 8411

©2026 HARMAN Professional. All rights reserved. Martin® is a registered trademark of HARMAN Professional Inc. registered in the United States and/or other countries.
Features, specifications, and appearance are subject to change without notice.

REV: 20260825

EXTERIOR PROJECTION PRO COMPACT

OUTDOOR-RATED CONFIGURABLE IMAGE PROJECTOR

SPEC SHEET

TECHNICAL SPECIFICATIONS (Cont.)

ELECTRICAL (Cont.)

POWER CONSUMPTION

Maximum ..... 180 W

Typical ..... 160 W

Idle ..... 10 W

Hibernation ..... 3 W

Measurements made at nominal voltage with all LEDs at full intensity. Allow for a deviation of +/- 10%. Typical: full output, no effects moving, regulated fan speed.

Idle: no output, no effects moving, regulated fan speed.

Hibernation: no output, motors de-energized, fans stopped, wake-up procedure to re-use fixture.

THERMAL

Cooling ..... Convection, internal forced air

Maximum surface temperature ..... 60° C (140° F)

Maximum ambient temperature(Ta max.) ..... 45° C (113° F) *

Minimum ambient temperature (Ta min.) ..... -30° C (-22° F)**

**Above this temperature, the fixture regulates output to protect from overheating.*

***For instant wake-up with no warm-up mode, leave power applied constantly in ambient temperatures below 0° C (32° F)*

ENVIRONMENTAL

RoHS ..... Compliant

REACH ..... Compliant

WEEE ..... Compliant

Proposition 65 ..... Compliant

FSC ..... Certified cardboard outer packaging

Efficacy (max output) ..... 32.9 lm/W

LWR ..... 416 lm/kg (189 lm/lbs.)

**LWR = Lumen-to-Weight Ratio*

APPROVALS

EU safety ..... EN 60598-2-5 (EN 60598-1), EN 62471, EN 62493

EU EMC ..... EN 55015, EN 55032(Class B),EN55035, EN 61000-3-2, EN 61000-3-3, EN 61547

US safety ..... ANSI/UL 1598

US EMC ..... CFR 47 Part 15 Class B

Canadian safety ..... CSA C22.2 No 250.13

Canadian EMC ..... CAN ICES (B)/ NMB(B)

Australia/NZ ..... RCM

Thailand ..... TISI 1955-2551

Global CB Certification/IECEE ..... IEC 60598-2-5 (IEC 60598-1)

BIS certification ..... (Pending)

Korea ..... KS C 9832, KS C 9835

CONFIGURATION TABLE

	1-Gobo module	4-Gobo module	Animation Module	Manual Framing Module
1			X	
2				X
3			X	X
4	X			
5	X		X	
6	X			X
7	X		X	X
8		X		
9		X	X	
10		X		X
11		X	X	X

COLOR WHEEL

1. Red
2. Green
3. Light Blue
4. Yellow
5. CTO – 4000K

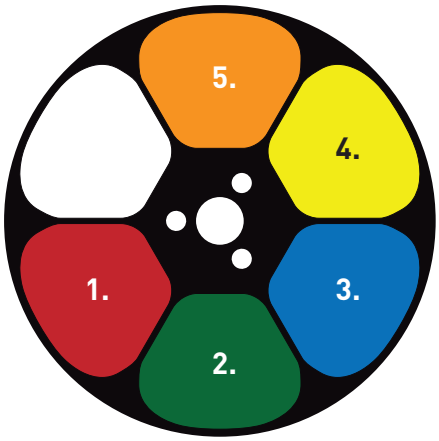

HARMAN PROFESSIONAL INC. ▪ 8500 BALBOA BOULEVARD ▪ NORTHRIDGE ▪ CA 91329 ▪ USA ▪ +1 818 893 8411

©2026 HARMAN Professional. All rights reserved. Martin® is a registered trademark of HARMAN Professional Inc. registered in the United States and/or other countries. Features, specifications, and appearance are subject to change without notice.

REV: 20260825

EXTERIOR PROJECTION PRO COMPACT

OUTDOOR-RATED CONFIGURABLE IMAGE PROJECTOR

SPEC SHEET

MANUAL FRAMING MODULE

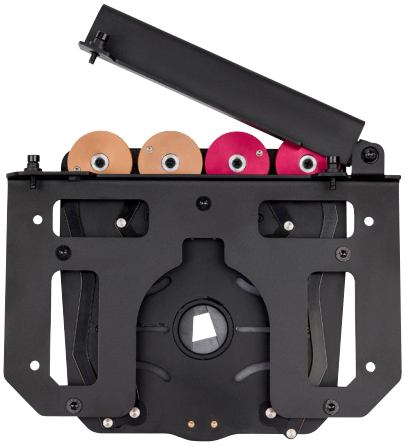

4 blades for manual adjustment of insert and angle using 8 finger knobs

Locking mechanism to secure blade positions

ANIMATION WHEEL

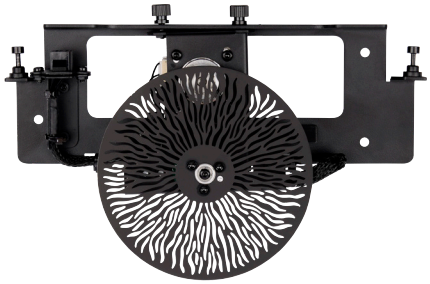

Manual adjustment of wheel position for vertical or horizontal effects

GOBO MODULES

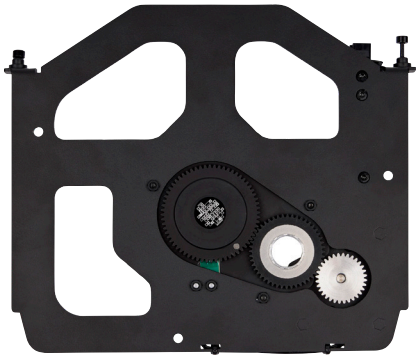

1-Gobo Module

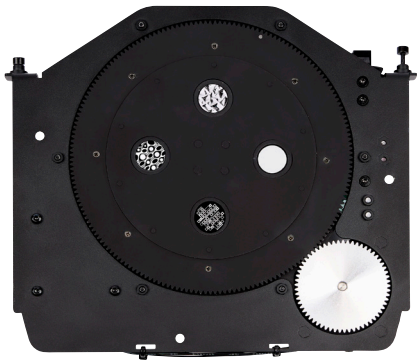

4-Gobo Module

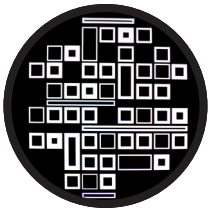

"Sequence It"

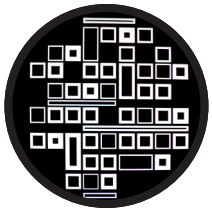

"Sequence It"

"Lava Shimmer"

"Limbo Structure Glass"

HARMAN PROFESSIONAL INC. ▪ 8500 BALBOA BOULEVARD ▪ NORTHRIDGE ▪ CA 91329 ▪ USA ▪ +1 818 893 8411

©2026 HARMAN Professional. All rights reserved. Martin® is a registered trademark of HARMAN Professional Inc. registered in the United States and/or other countries.
Features, specifications, and appearance are subject to change without notice.

REV: 20260825

EXTERIOR PROJECTION PRO COMPACT

OUTDOOR-RATED CONFIGURABLE IMAGE PROJECTOR

SPEC SHEET

PROJECTION DATA - GOBO WITH MAX. IMAGE SIZE

Narrow Zoom Setting – 15°

Distance to projection surface in meters (ft.)	4.0 m (13.1 ft.)	6.0 m (19.7 ft.)	8.0 m (26.2 ft.)	10.0 m (32.8 ft.)	12.0 m (39.4 ft.)	14.0 m (45.9 ft.)	16.0 m (52.5 ft.)	18.0 m (52.5 ft.)	20.0 m (65.6 ft.)
Projection diameter in meters (ft.)	1.1 m (3.5 ft.)	1.6 m (5.2 ft.)	2.1 m (6.9 ft.)	2.6 m (8.6 ft.)	3.2 m (10.4 ft.)	3.7 m (12.1 ft.)	4.2 m (13.8 ft.)	4.7 m (15.5 ft.)	5.3 m (17.3 ft.)
Center illuminance in lux	6749	2999	1687	1080	750	551	422	333	270
Center illuminance in candela	627	279	157	100	70	51	39	31	25

Medium Zoom Setting – 25°

Distance to projection surface in meters (ft.)	4.0 m (13.1 ft.)	6.0 m (19.7 ft.)	8.0 m (26.2 ft.)	10.0 m (32.8 ft.)	12.0 m (39.4 ft.)	14.0 m (45.9 ft.)	16.0 m (52.5 ft.)	18.0 m (52.5 ft.)	20.0 m (65.6 ft.)
Projection diameter in meters (ft.)	1.8 m (5.8 ft.)	2.7 m (8.7 ft.)	3.5 m (11.6 ft.)	4.4 m (14.5 ft.)	5.3 m (17.5 ft.)	6.2 m (20.4 ft.)	7.1 m (23.3 ft.)	8.0 m (26.2 ft.)	8.9 m (29.1 ft.)
Center illuminance in lux	2261	1005	565	362	251	185	141	112	90
Center illuminance in candela	210	93	53	34	23	17	13	10	8

Wide Zoom Setting – 35°

Distance to projection surface in meters (ft.)	4.0 m (13.1 ft.)	6.0 m (19.7 ft.)	8.0 m (26.2 ft.)	10.0 m (32.8 ft.)	12.0 m (39.4 ft.)	14.0 m (45.9 ft.)	16.0 m (52.5 ft.)	18.0 m (52.5 ft.)	20.0 m (65.6 ft.)
Projection diameter in meters (ft.)	2.5 m (8.3 ft.)	3.8 m (12.4 ft.)	5.0 m (16.5 ft.)	6.3 m (20.7 ft.)	7.6 m (24.8 ft.)	8.8 m (29.0 ft.)	10.1 m (33.1 ft.)	11.4 m (37.2 ft.)	12.6 m (41.4 ft.)
Center illuminance in lux	1159	515	290	185	129	95	72	57	46
Center illuminance in candela	108	48	27	17	12	9	7	5	4

Very Wide Zoom Setting – 45°

Distance to projection surface in meters (ft.)	4.0 m (13.1 ft.)	6.0 m (19.7 ft.)	8.0 m (26.2 ft.)	10.0 m (32.8 ft.)	12.0 m (39.4 ft.)	14.0 m (45.9 ft.)	16.0 m (52.5 ft.)	18.0 m (52.5 ft.)	20.0 m (65.6 ft.)
Projection diameter in meters (ft.)	3.3 m (10.9 ft.)	5.0 m (16.3 ft.)	6.6 m (21.7 ft.)	8.3 m (27.2 ft.)	9.9 m (32.6 ft.)	11.6 m (38.0 ft.)	13.3 m (43.5 ft.)	14.9 m (48.9 ft.)	16.6 m (54.4 ft.)
Center illuminance in lux	721	320	180	115	80	59	45	36	29
Center illuminance in candela	67	30	17	11	7	5	4	3	3

HARMAN PROFESSIONAL INC. ▪ 8500 BALBOA BOULEVARD ▪ NORTHRIDGE ▪ CA 91329 ▪ USA ▪ +1 818 893 8411

©2026 HARMAN Professional. All rights reserved. Martin® is a registered trademark of HARMAN Professional Inc. registered in the United States and/or other countries.
Features, specifications, and appearance are subject to change without notice.

REV: 20260825

EXTERIOR PROJECTION PRO COMPACT

OUTDOOR-RATED CONFIGURABLE IMAGE PROJECTOR

SPEC SHEET

MOUNTING OPTIONS

Customer install of power and DMX cables or PD Hybrid In/ Out cable tails

DIMENSIONS

PHYSICAL

Length ..... 342 mm (13.5 inch.)
Width ..... 272 mm (10.7 inch.)
Height ..... 335 mm (13.2 inch.)
Weight ..... 12.5-13.9 kg (27.5–30.6 lbs)
Weight depends on actual configuration

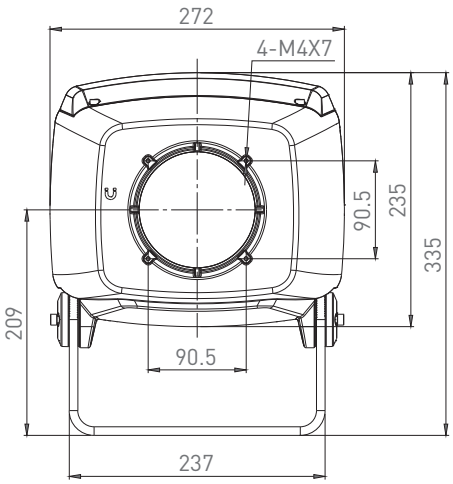

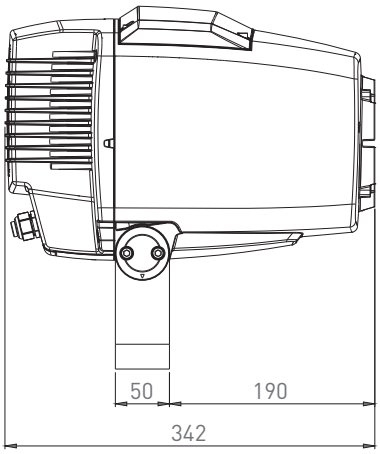

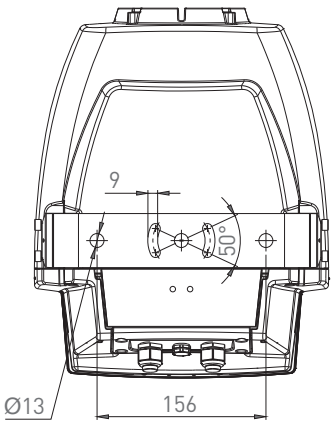

All dimensions shown in mm

HARMAN PROFESSIONAL INC. ▪ 8500 BALBOA BOULEVARD ▪ NORTHRIDGE ▪ CA 91329 ▪ USA ▪ +1 818 893 8411

©2026 HARMAN Professional. All rights reserved. Martin® is a registered trademark of HARMAN Professional Inc. registered in the United States and/or other countries.
Features, specifications, and appearance are subject to change without notice.

REV: 20260825