Exterior Wash Pro XL Quad

OUTDOOR-RATED QUAD COLOR WASH LIGHT WITH CREATIVE CONTROL

SPEC SHEET

Engineered for harsh conditions and creativity, **Exterior Wash Pro XL QUAD** provides a logical, user-friendly and versatile lighting solution designed to illuminate large-scale structures and building facades. Featuring external micro lenses and an optional baffle snoot, this fixture provides configurable beam control. The Exterior Wash Pro XL QUAD features unparalleled color performance. The factory color calibration ensures superior color consistency and provides a dedicated color temperature control channel spanning from 1000K to 12,500K precisely following the black-body curve. The integrated color boost technology encompassing smart ratio between LED capacity and PSU capacity results in saturated and mixed colors up to three times brighter than previous models. Designed for permanent outdoor installations and backed by a 5-year warranty, this fixture meets rigorous environmental standards.

FEATURES

- **Logic family** of four sizes and lumen packages (S, M, L, XL)
- **Compact and slim** design
- **Superior color consistency** based on factory calibration
- **Color boost** for bright saturated and mixed colors
- Dedicated **color temperature control** channel
- **Narrow beam-angle** using high-power RGBW LEDs
- Optional **baffle snoot**
- Externally mounted **micro lens diffusers**
- **RDM and DMX** control
- **Local diagnostics** and focusing via magnetic sensor
- **Power and DMX IN/OUT** pre-mounted cables
- **Optional Hybrid IN/OUT** cable solution
- **Fully weatherized** housing (IP66, IK08 and C-5 High corrosion rating)
- Shipped in **FSC certified carboard** only packaging
- **5-year** warranty

HARMAN PROFESSIONAL INC. ▪ 8500 BALBOA BOULEVARD ▪ NORTHRIDGE ▪ CA 91329 ▪ USA ▪ +1 818 893 8411

©2026 HARMAN Professional. All rights reserved. Martin® is a registered trademark of HARMAN Professional Inc. registered in the United States and/or other countries.
Features, specifications, and appearance are subject to change without notice.

REV: 20260825

Exterior Wash Pro XL Quad

OUTDOOR-RATED QUAD COLOR WASH LIGHT WITH CREATIVE CONTROL

SPEC SHEET

FEATURE HIGHLIGHTS

APPEALING DESIGN WITHIN A COHESIVE PRODUCT LINE
Choose from four sizes and lumen output packages that accommodate various installations and budgets. Enjoy a compact, lightweight design with integrated baffle snoot option for added versatility.

PRECISE BEAM CONTROL
Achieve precise light control and high intensity, while minimizing stray light in long-range applications, thanks to a narrow beam angle.

UNPARALLELED COLOR PERFORMANCE
Aesthetically pleasing appearance with seamless color mixing and color boost for up to 3 times brighter saturated and mixed colors.

SOPHISTICATED COLOR CONTROL
Includes a dedicated control channel with a user-selectable default color temperature from a warm 1000K up to a cold 12,500 Kelvin temperature, which follows the black body curve.

SMART CONTROL
Easy local diagnostics and focusing using the integrated magnetic sensor. Easy configuration and stand-alone programming via Martin Companion.

RESPONSIBLE CHOICE
Durable design for permanent outdoor installations, backed by a 5-year warranty, and meet rigorous environmental standards. Their compact, lightweight design minimizes environmental impact and shipping costs, they are fully repairable, and ship in full cardboard FSC-certified packaging.

TECHNICAL SPECIFICATIONS

DYNAMIC EFFECTS

Strobe:	Regular and random strobe (in extended mode)
Intensity:	0 - 100 % continuous dimming
Color mixing:	RGB + CTC (Color Temperature Control)
Color temperature control:	1000K - 12500K in 50K steps

CONTROL AND PROGRAMMING

Control systems:	DMX, RDM
User interface:	Magnetic sensor for local diagnostics and focusing
Stand-alone control:	Up to 20 scenes with individual fade/ hold times
Control resolution:	8-bit DMX control of each color
Dimmer resolution:	16-bit DMX control of intensity
DMX channels:	6/3/7/4 (Standard/Basic/Extended/Raw)
DMX compliance:	USITT DMX512/1990
RDM compliance:	ANSI/ESTA E1.20
DMX/RDM Transceiver:	Galvanic-isolated RS-485
Firmware update:	Serial upload via DMX link

OPTICS

Light source:	25 x RGBW LEDs
Total LED power:	1000 W (25 x 40 W)
LED Manufacturer:	Osram
Minimum LED lifetime:	100 000 hours (to >70% luminous output)*
Binning:	Tight color and flux binning
Calibration:	Full Gamut Color Calibration (1 step MacAdam ellipse)

**Figure obtained under manufacturer's test conditions at Ta = 25° C.*

BEAM ANGLE OPTIONS:

Native beam angle:	8°
Narrow micro lens:	10°
Medium micro lens:	16°
Wide micro lens:	30°
Very Wide micro lens:	54°
Asymmetric micro lens	9° x 56°

PHOTOMETRIC DATA

CRI (Color Rendering Index):	> 70
CCT:	1000K - 12500K (default 4000K)

LUMINOUS OUTPUT*:

Full:	10400 lm
Red:	3260 lm
Green:	6680 lm
Blue:	2830 lm

** All Photometric Data measured in steady state (30 minutes warm-up time) at 25°C ambient.*

CONSTRUCTION

Housing:	Cast Aluminum
Surface treatment:	Anodized and electrostatic powder-coated
Color:	Traffic grey RAL 7042 - other colors available on request
Effective Projected Area (EPA):	0.149 m² / 0.180m²
Protection rating:	IP66
Impact resistance:	IK08
Corrosion resistance:	C5 High (ISO 12944-6)
Vibration resistance:	1.0g, Sinusoidal (IEC 60068-2-6), 0,7g RMS Random (IEC 60068-2-64), 3.0g (ANSI C136-31)

INSTALLATION

Orientation:	Any
Mounting:	Adjustable bracket
Minimum distance to illuminated surfaces:	0.4 m (1.3 ft.)

HARMAN PROFESSIONAL INC. ■ 8500 BALBOA BOULEVARD ■ NORTHRIDGE ■ CA 91329 ■ USA ■ +1 818 893 8411

©2026 HARMAN Professional. All rights reserved. Martin® is a registered trademark of HARMAN Professional Inc. registered in the United States and/or other countries.
Features, specifications, and appearance are subject to change without notice.

REV: 20260825

Exterior Wash Pro XL Quad

OUTDOOR-RATED QUAD COLOR WASH LIGHT WITH CREATIVE CONTROL

SPEC SHEET

TECHNICAL SPECIFICATIONS (Cont.)

CONNECTIONS

Power connection: ..... 2 m (6.5 ft.) cable tail open ended
Power input cable type, EU models: .... H07RN-F 3G 1.0mm², 450/750V, VDE
Power input cable type, US models: .... PVC SJTW 3x1.31mm² (16AWG) 105° C 300V VW-1
Data connection: ..... 2 m (6.5 ft.) open ended 6-conductor combined input + output cable tail

Hybrid power/data cables (in & thru) 8-pin custom connectors available on request

ELECTRICAL

AC power: ..... 100 -240 / 277 V nominal, 50/60 Hz
Power supply unit: ..... Auto-ranging electronic switch-mode
Typical half-cycle RMS inrush current: 14 A
Max earth leakage: ..... 0.5 mA
Power factor: ..... 0.99 @ 110 V / 120 V, 0.96 @ 208 V / 230V, 0.90 @ 277 V
Max current draw: ..... 2.50 A @ 100 V,2.1 A @ 120 V, 1.1 A @ 230 V, 0.90 A @ 277 V
Surge protection: 4KV

POWER CONSUMPTION:

Maximum: ..... 250 W (reduced mode 200W)*
Idle: ..... 4.0 W*

** Measurements made at nominal voltage. Allow for a deviation of +/- 10%. Idle: all LEDs at zero intensity*

THERMAL

Cooling: ..... Convection
Maximum ambient temperature: ..... 45° C (113° F)*
Minimum ambient temperature: ..... -30° C (-22° F)**
Total heat dissipation (calculated, +/- 10%): ..... 853 BTU/hr

**Above this temperature, the fixture regulates output to protect from overheating.*
***Power must be maintained below -20° C (-4° F)*

ENVIRONMENTAL

RoHS: ..... Compliant
REACH: ..... Compliant
WEEE: ..... Compliant
Proposition 65: ..... Compliant
Packaging: ..... FSC certified cardboard inlay and outer box
Efficacy (max output): ..... 42 lm/W
LWR: ..... 588 lm/kg (267 lm/lb)*

**LWR = Lumen-to-Weight Ratio*

APPROVALS

Global CB Certification/IECEE: ..... IEC 60598-2-5 (IEC 60598-1)
EU Safety: ..... EN 60598-2-5 (EN 60598-1), EN 62471, EN 62493
EU EMC: ..... EN 55015, EN 55032, EN55035, EN 61547, EN 61000-3-2, EN 61000-3-3
US safety: ..... ANSI/UL 1598
US EMC: ..... 47 CFR Part 15 Class B
Canadian safety: ..... CSA C22.2 No. 250.0
Canadian EMC: ..... ICES 003(B), ICES 005(B)
Australia/NZ: ..... RCM
United Kingdom: ..... UKCA
India: ..... BIS IS 10322(Part5/section5) - Pending
Korea: ..... KS C 9832, KS C 9835

RELATED ITEMS

- Martin Companion Cable: ..... P/N MAR-91616091

HARMAN PROFESSIONAL INC. ■ 8500 BALBOA BOULEVARD ■ NORTHRIDGE ■ CA 91329 ■ USA ■ +1 818 893 8411

©2026 HARMAN Professional. All rights reserved. Martin® is a registered trademark of HARMAN Professional Inc. registered in the United States and/or other countries.
Features, specifications, and appearance are subject to change without notice.

REV: 20260825

Exterior Wash Pro XL Quad

OUTDOOR-RATED QUAD COLOR WASH LIGHT WITH CREATIVE CONTROL

SPEC SHEET

ORDERING INFORMATION - ACCESSORIES

- Micro Lens Pro XL - Narrow: .....P/N MAR-90590041
- Micro Lens Pro XL - Medium: .....P/N MAR-90590042
- Micro Lens Pro XL - Wide:.....P/N MAR-90590043
- Micro Lens Pro XL - Very Wide: .....P/N MAR-90590044
- Micro Lens Pro XL - Asymmetric:.....P/N MAR-90590045
- Baffle Snoot Pro XL QUAD: .....P/N MAR-90590020
- Exterior Multitool:.....P/N MAR-90590025
- Hybrid PD cable tail In/Out 0.5 m, black:.....P/N MAR-91700020
- Attachment plate for safety wire: .....P/N MAR-90590050
- Junction Box Power DMX to PD: .....P/N MAR-91700019

EXTERIOR MULTI-TOOL

BAFFLE SNOOT PRO XL QUAD

EXTERIOR WASH PRO MICRO LENS

ATTACHMENT PLATE FOR SAFETY WIRE INSTALLED

ORDERING INFORMATION - FIXTURES

- Exterior Wash Pro XL QUAD, EU, grey: .....P/N MAR-90590004
- Exterior Wash Pro XL QUAD, EU, white: .....P/N MAR-90590104
- Exterior Wash Pro XL QUAD US, grey: .....P/N MAR-90590008

MARTIN EXTERIOR WASH PRO XL QUAD

THE COMPLETE MARTIN EXTERIOR WASH PRO QUAD LINE

HARMAN PROFESSIONAL INC. ▪ 8500 BALBOA BOULEVARD ▪ NORTHRIDGE ▪ CA 91329 ▪ USA ▪ +1 818 893 8411

©2026 HARMAN Professional. All rights reserved. Martin® is a registered trademark of HARMAN Professional Inc. registered in the United States and/or other countries.
Features, specifications, and appearance are subject to change without notice.

REV: 20260825

Exterior Wash Pro XL Quad

OUTDOOR-RATED QUAD COLOR WASH LIGHT WITH CREATIVE CONTROL

SPEC SHEET

DIMENSIONS

PHYSICAL

Length: ..... 175 mm (6.89 in.)
Width: ..... 351 mm (13.82 in.)
Height: ..... 438 mm (11.93 in.)
Weight: ..... 17.7 kg (39.0 lbs)

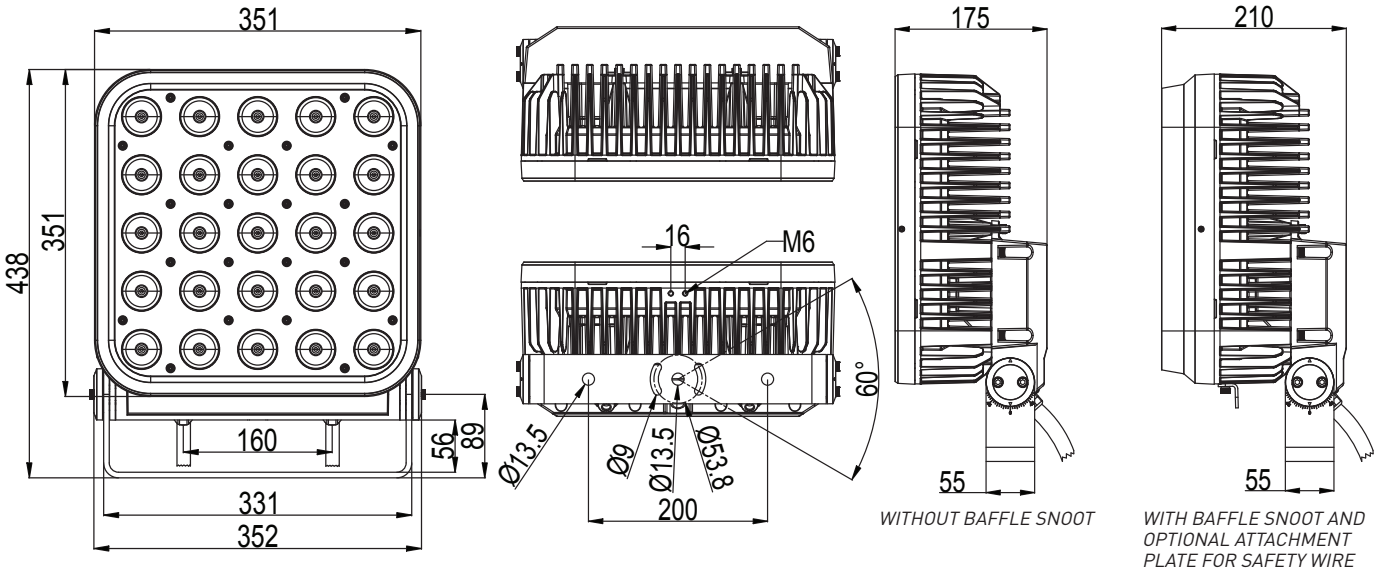

WITHOUT BAFFLE SNOOT

WITH BAFFLE SNOOT AND OPTIONAL ATTACHMENT PLATE FOR SAFETY WIRE

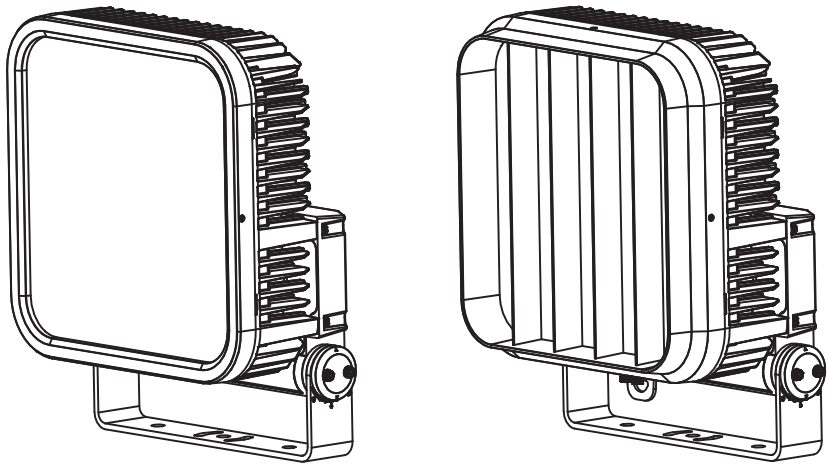

All dimensions are in mm

HARMAN PROFESSIONAL INC. ▪ 8500 BALBOA BOULEVARD ▪ NORTHRIDGE ▪ CA 91329 ▪ USA ▪ +1 818 893 8411

©2026 HARMAN Professional. All rights reserved. Martin® is a registered trademark of HARMAN Professional Inc. registered in the United States and/or other countries.
Features, specifications, and appearance are subject to change without notice.

REV: 20260825