Exterior Wash Pro S CTC

OUTDOOR RATED WASH LIGHT WITH COLOR TEMPERATURE CONTROL

SPEC SHEET

Engineered for harsh conditions and creativity, **Exterior Wash Pro S CTC** provides a logical, user-friendly and versatile lighting solution designed to illuminate smaller structures, features of a building and landscaping. Featuring external lenses and an optional baffle snoot, this fixture provides configurable beam control. Exterior Wash Pro S CTC offers dedicated color temperature control from 2400K - 6500K. Designed for permanent outdoor installations and backed by a 5-year warranty, this fixture meets rigorous environmental standards.

FEATURES

- **Logic family** of four sizes and lumen packages (S, M, L, XL)
- **Compact** and slim design
- **Extended color temperature control** from 2400K - 6500K
- **More than** 60 lm/W efficacy
- **Narrow** beam-angle using high-power LEDs
- Optional **baffle snoot**
- Externally mounted **micro lens diffusers**
- **RDM and DMX** control
- **Local diagnostics** and focusing via magnetic sensor
- **Power and DMX IN/OUT** pre-mounted cables
- **Optional Hybrid IN/Out** cable solution
- **Fully weatherized** housing (IP66, IK08 and C-5 High corrosion rating)
- Shipped in **FSC certified** carboard packaging
- **5-year** warranty

HARMAN PROFESSIONAL INC. ▪ 8500 BALBOA BOULEVARD ▪ NORTHRIDGE ▪ CA 91329 ▪ USA ▪ +1 818 893 8411

©2026 HARMAN Professional. All rights reserved. Martin® is a registered trademark of HARMAN Professional Inc. registered in the United States and/or other countries.
Features, specifications, and appearance are subject to change without notice.

REV: 20260825

Exterior Wash Pro S CTC

OUTDOOR RATED WASH LIGHT WITH COLOR TEMPERATURE CONTROL

SPEC SHEET

FEATURE HIGHLIGHTS

LOGICAL AND COHESIVE PRODUCT FAMILY
Choose from four sizes and lumen output packages that accommodate various installations and budgets. Enjoy a compact, lightweight design with integrated baffle snoot option for added versatility.

PRECISE BEAM CONTROL
Achieve precise light control and high intensity, while minimizing stray light in long-range applications, thanks to the narrow beam angle.

EXTENDED COLOR TEMPERATURE RANGE
Exterior Wash Pro CTC models feature warm (2400K), Medium (4000K) and Cold (6500K) LEDs for extended color temperature range and improved white light quality.

SUPERIOR TEMPERATURE CONTROL
Dedicated control channel to choose a color temperature from a warm 2400K up to a cold 6500 Kelvin.

SMART CONTROL
The integrated magnetic sensor is ideal for local diagnostics and focusing. Also included are RDM control and stand-alone programming via Martin Companion for easy configuration.

RESPONSIBLE CHOICE
Durable design for permanent outdoor installations, backed by a 5-year warranty, and meet rigorous environmental standards. Their compact, lightweight design minimizes environmental impact and shipping costs, they are fully repairable, and ship in full cardboard FSC-certified packaging.

TECHNICAL SPECIFICATIONS

DYNAMIC EFFECTS

Intensity:	0 -100 %
Color temperature control:	2400 K - 6500 K

CONTROL AND PROGRAMMING

Control systems:	DMX, RDM
User interface:	Magnetic sensor for local diagnostics and focusing
Stand-alone control:	Up to 20 scenes with individual fade/ hold times
Control resolution:	8-bit DMX control of each color
Dimmer resolution:	16-bit DMX control of intensity
DMX channels:	3/3 (Standard/Basic)
DMX compliance:	USITT DMX512/1990
RDM compliance:	ANSI/ESTA E1.20
DMX/RDM Transceiver:	Galvanic-isolated RS-485
Firmware update:	Serial upload via DMX link

OPTICS

Light source:	3 x 2400K, 3 x 4000K, 3 x 6500 K white LEDs
Total LED power:	54 W (9 x 6 W)
LED Manufacturer:	Cree
Minimum LED lifetime:	100 000 hours (to >70% luminous output)*
Binning:	Tight color and flux binning

**Figure obtained under manufacturer's test conditions at Ta = 25° C.*

BEAM ANGLE OPTIONS:

Native beam angle:	7°
Narrow micro lens:	9°
Medium micro lens:	15°
Wide micro lens:	30°
Very Wide micro lens:	50°
Asymmetric micro lens	8° x 60°

PHOTOMETRIC DATA

CRI (Color Rendering Index):	> 70
CCT:	2400K - 6500K (default 4000K)

LUMINOUS OUTPUT*

2400K:	1100 lm
4000K:	2200 lm
6500K:	1700 lm

** All Photometric Data measured in steady state (30 minutes warm-up time) at 25°C ambient.*

CONSTRUCTION

Housing:	Cast Aluminum
Surface treatment:	Anodized and electrostatic powder-coated
Color:	Traffic grey RAL 7042 - other colors available on request
Effective Projected Area (EPA):	0.026 m² / 0.038 m²
Protection rating:	IP66
Impact resistance:	IK08
Corrosion resistance:	C5 High (ISO 12944-6)
Vibration resistance:	1.0g, Sinusoidal (IEC 60068-2-6), 0,7g RMS Random (IEC 60068-2-64), 3.0g (ANSI C136-31)

INSTALLATION

Orientation:	Any
Mounting:	Adjustable bracket
Minimum distance to illuminated surfaces:	0.1 m (0.3 ft.)

HARMAN PROFESSIONAL INC. ▪ 8500 BALBOA BOULEVARD ▪ NORTHRIDGE ▪ CA 91329 ▪ USA ▪ +1 818 893 8411

©2026 HARMAN Professional. All rights reserved. Martin® is a registered trademark of HARMAN Professional Inc. registered in the United States and/or other countries.
Features, specifications, and appearance are subject to change without notice.

REV: 20260825

Exterior Wash Pro S CTC

OUTDOOR RATED WASH LIGHT WITH COLOR TEMPERATURE CONTROL

SPEC SHEET

TECHNICAL SPECIFICATIONS (Cont.)

CONNECTIONS

Power connection: ..... 2 m (6.5 ft.) cable tail open ended
Power input cable type, EU models: .... H07RN-F 3G 1.0mm², 450/750V, VDE
Power input cable type, US models: .... PVC SJTW 3x1.31mm² (16AWG) 105° C 300V VW-1
Data connection: ..... 2 m (6.5 ft.) open ended 6-conductor combined input + output cable tail

Hybrid power/data cables (in & thru) 8-pin custom connectors available on request

ELECTRICAL

AC power: ..... 100 -240 / 277 V nominal, 50/60 Hz
Power supply unit: ..... Auto-ranging electronic switch-mode
Typical half-cycle RMS inrush current: 12 A
Max earth leakage: ..... 0.5 mA
Power factor: ..... 0.99 @ 110 V / 120 V, 0.94 @ 208 V / 230V, 0.92 @ 277 V
Max current draw: ..... 0.35 A @ 100 V, 0.29 A @ 120 V, 0.15 A @ 230 V, 0.13 A @ 277 V
Surge protection: 4KV

POWER CONSUMPTION

Maximum: ..... 35 W (Reduced mode 28W)*
Idle: ..... 2.0 W*

** Measurements made at nominal voltage. Allow for a deviation of +/- 10%. Idle: all LEDs at zero intensity*

THERMAL

Cooling: ..... Convection
Maximum ambient temperature: ..... 45° C (113° F)*
Minimum ambient temperature: ..... -30° C (-22° F)**
Total heat dissipation: ..... (calculated, +/- 10%): 119 BTU/hr

**Above this temperature, the fixture regulates output to protect from overheating.*

***Power must be maintained below -20° C (-4° F)*

ENVIRONMENTAL

RoHS: ..... Compliant
REACH: ..... Compliant
WEEE: ..... Compliant
Proposition 65: ..... Compliant
Packaging: ..... FSC certified cardboard inlay and outer box
Efficacy (max output): ..... 65 lm/W
LWR: ..... 500 lm/kg (277 lm/lb)*

**LWR = Lumen-to-Weight Ratio*

APPROVALS

Global CB Certification/IECEE: ..... IEC 60598-2-5 (IEC 60598-1)
EU Safety: ..... EN 60598-2-5 (EN 60598-1), EN 62471, EN 62493
EU EMC: ..... EN 55015, EN 55032, EN55035, EN 61547, EN 61000-3-2, EN 61000-3-3
US safety: ..... ANSI/UL 1598
US EMC: ..... 47 CFR Part 15 Class B
Canadian safety: ..... CSA C22.2 No. 250.0
Canadian EMC: ..... ICES 003(B), ICES 005(B)
Australia/NZ: ..... RCM
United Kingdom: ..... UKCA
India: ..... BIS IS 10322 (Part5/section5) - Pending
Korea: ..... KS C 9832, KS C 9835

RELATED ITEMS

- Martin Companion Cable: ..... P/N MAR-91616091

HARMAN PROFESSIONAL INC. ■ 8500 BALBOA BOULEVARD ■ NORTHRIDGE ■ CA 91329 ■ USA ■ +1 818 893 8411

©2026 HARMAN Professional. All rights reserved. Martin® is a registered trademark of HARMAN Professional Inc. registered in the United States and/or other countries.
Features, specifications, and appearance are subject to change without notice.

REV: 20260825

Exterior Wash Pro S CTC

OUTDOOR RATED WASH LIGHT WITH COLOR TEMPERATURE CONTROL

SPEC SHEET

ORDERING INFORMATION - ACCESSORIES

- Micro Lens Pro S - Narrow: .....P/N MAR-90590026
- Micro Lens Pro S - Medium: .....P/N MAR-90590027
- Micro Lens Pro S - Wide:.....P/N MAR-90590028
- Micro Lens Pro S -Very Wide: .....P/N MAR-90590029
- Micro Lens Pro S - Asymmetric:.....P/N MAR-90590030
- Baffle Snoot Pro S CTC: .....P/N MAR-90590021
- Exterior Multitool:.....P/N MAR-90590025
- Hybrid PD cable tail In/Out 0.5 m, black:.....P/N MAR-91700020
- Attachment plate for safety wire: .....P/N MAR-90590050
- Junction Box Power DMX to PD: .....P/N MAR-91700019

EXTERIOR MULTI-TOOL

BAFFLE SNOOT PRO S CTC

EXTERIOR WASH PRO MICRO LENS

ATTACHMENT PLATE FOR SAFETY WIRE INSTALLED

ORDERING INFORMATION - FIXTURES

- Exterior Wash Pro S CTC, EU, grey: .....P/N MAR-9059000
- Exterior Wash Pro S CTC, US, grey: .....P/N MAR-90590013

THE COMPLETE MARTIN EXTERIOR WASH PRO CTC LINE

HARMAN PROFESSIONAL INC. ▪ 8500 BALBOA BOULEVARD ▪ NORTHRIDGE ▪ CA 91329 ▪ USA ▪ +1 818 893 8411

©2026 HARMAN Professional. All rights reserved. Martin® is a registered trademark of HARMAN Professional Inc. registered in the United States and/or other countries.
Features, specifications, and appearance are subject to change without notice.

REV: 20260825

Exterior Wash Pro S CTC

OUTDOOR RATED WASH LIGHT WITH COLOR TEMPERATURE CONTROL

SPEC SHEET

DIMENSIONS

PHYSICAL

Length: ..... 141 mm (5.55 inch.)
Width: ..... 155 mm (6.10 inch.)
Height: ..... 236 mm (9.65 inch.)
Weight: ..... 4.4 kg (9.7 lbs)

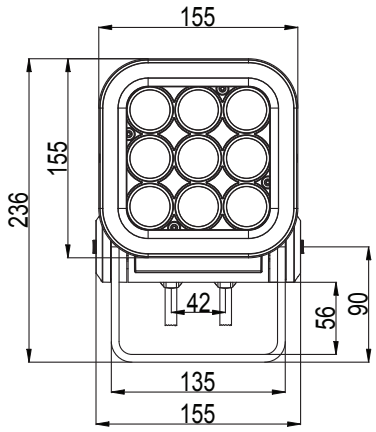

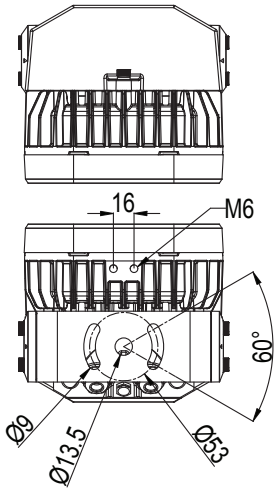

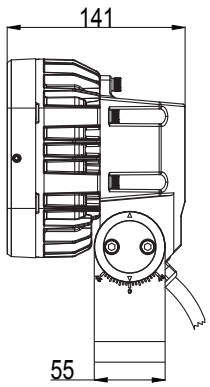

WITHOUT BAFFLE SNOOT

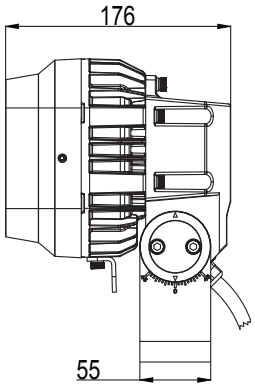

WITH BAFFLE SNOOT AND OPTIONAL ATTACHMENT PLATE FOR SAFETY WIRE

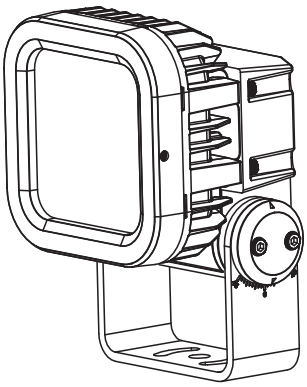

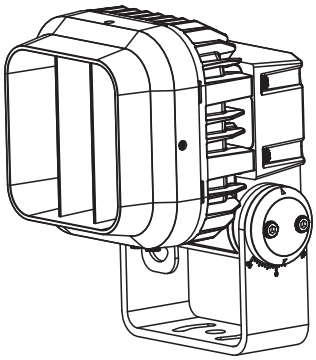

All dimensions are in mm

HARMAN PROFESSIONAL INC. ▪ 8500 BALBOA BOULEVARD ▪ NORTHRIDGE ▪ CA 91329 ▪ USA ▪ +1 818 893 8411

©2026 HARMAN Professional. All rights reserved. Martin® is a registered trademark of HARMAN Professional Inc. registered in the United States and/or other countries.
Features, specifications, and appearance are subject to change without notice.

REV: 20260825