MAC ONE

CREATIVE BEAMWASH MOVING HEAD WITH FRESNEL LENS

SPEC SHEET

Setting a new standard for compact moving heads, **MAC One** is a revolutionary Beam, Wash and Eye-Candy fixture, featuring a captivating Fresnel lens that transforms any stage or event into an extraordinary visual spectacle. Compact, lightweight, and highly versatile, MAC One defines a new compact class of performance lighting.

MAC One excels in three powerful feature areas. First, its narrow, high-intensity beam packs the same punch as larger, heavier fixtures to enable robust and vibrant aerial effects. Next, its stunning Fresnel lens creates a soft wash with a wide 4 to 27-degree zoom range, delivering seamless transitions and engaging visual effects. Rounding out the robust feature-set is an innovative backlight system with 24 RGB effect LEDs within the lens to guarantee memorable and show-stopping visual experiences.

With an impressive output of 2,500 lm and a narrow beam intensity of 375,000 cd, MAC One's performance is unparalleled in its category. Powered by a custom-developed 120 W RGBL (Red, Green, Blue, Lime) LED engine, it ensures higher light quality (CRI, TM-30, TLCI) than traditional RGBW fixtures, appealing to discerning lighting designers.

MAC One stands out against competing fixtures by delivering an innovative combination of features in an incredibly compact and low-weight form-factor. The fixture is easy to handle and manage, opening up a world of creative possibilities for lighting designers and users. More fixtures can be used in a show without compromising weight or space limitations, resulting in lower transport costs and a significant return on investment for rental companies.

For additional versatility, MAC One can also be used with the interlocking accessory system originally created for Martin's VDO Atomic products. Martin fourbar and matrix accessories can also be used to further extend its design potential and ease large quantity deployment. MAC One can be driven with DMX, Art-Net, sACN, and Martin P3 control systems for seamless integration into any lighting setup.

Whether you are a lighting designer, rental company, or event organizer, MAC One is the answer for creating big looks with many fixtures, utilizing a compact fixture for tight spaces or enthralling the stage with captivating eye-candy effects. Transcend expectations, empower creative expression and revolutionize the stage with MAC One.

COMPACT & LIGHTWEIGHT
Easy to move and install

NARROW FAST BEAM
Very impressive and snappy beams

BEAUTIFUL BACKLIGHT
Unique eye-candy looks from Fresnel Lens and backlight effect

FRESNEL WASH
Compact wash light that fits everywhere

SCALABLE
Easy to deploy in large quantities using smart rigging accessories

HARMAN PROFESSIONAL INC. • 8500 BALBOA BOULEVARD • NORTHRIDGE • CA 91329 • USA • +1 818 893 8411

©2026 HARMAN Professional. All rights reserved. Martin® is a registered trademark of HARMAN Professional Inc. registered in the United States and/or other countries.
Features, specifications, and appearance are subject to change without notice.

REV: 20260828

MAC ONE

CREATIVE BEAMWASH MOVING HEAD WITH FRESNEL LENS

SPEC SHEET

FEATURE HIGHLIGHTS

A PUNCH ABOVE + WELL DEFINED INTENSITY

With 2,500 lm output from a form factor just above 4kg, MAC One features great output to size ratio, delivering impressive light output from a compact and lightweight fixture. Additionally, MAC One's narrow beam intensity of 375,000 cd ensures a well-defined, tight, fast, and responsive mid-air beam.

HIGH QUALITY LIGHT OUTPUT

Martin's custom-designed 120 W RGBL (Red, Green, Blue, Lime) LED engine with higher CRI / TM-30 / TLCI offers better rendering of people and costumes for demanding broadcast and theater applications.

BEAUTIFUL TO LOOK AT, BEAUTIFUL TO LIGHT UP

MAC One offers precision control for the most demanding applications in broadcast and theatre and the ability to remove unwanted flicker in broadcast applications. It also offers beautiful eye-candy, empowering it to decorate the stage when the fixture is not being used as a beam or wash.

BEAMING BRILLIANCE

With a 4 to 27 degree zoom, MAC One can deliver a tight, fast, and well-defined beam, but also a soft-edged wash with its championed Fresnel lens, often loved by lighting designers.

EXTREMELY COMPACT SIZE

Weighing just 4.4 kg / 9.7 lbs., MAC One is easy to deploy in large quantities and reduces shipping costs and environmental impact. It's also perfect for venues with load-bearing limits or space-constraints.

ACCESSORY ADAPTATIONS

With the optional fourbar accessory, MAC One fixtures can be transported, rigged, unrigged, and cabled in blocks of four, saving time when deploying several fixtures. An optional grid mount adapter enables the fixtures to be rigged in (self-supported) lines and matrices for creation of a 'wall of light' without needing a custom rigging structure. Lines and matrices can contain a mix of MAC One and VDO Atomic Bold and Dot fixtures.

FEATURES

Light Source

- Light Engine: Custom in-house developed 120 W RGBL (Red, Green, Blue, Lime) LED offering higher light quality (CRI, TM-30, TLCI) than RGBW.
- Lumen Output: 2,500 lm
- Intensity: 375,000 cd in narrow beam

Optics

- Zoom: 4 to 27 degrees zoom
- 150 mm Fresnel lens
- 24 RGB backlight LEDs

Construction

- Weight: 4.4 kg / 9.7 lbs.
- Weather rating: IP20-rated

Control

- DMX, Art-Net, sACN & Martin P3 control.
- Battery-powered display for setup and configuration.

Installation

- Single omega bracket attachment
- M12 threaded holes for direct clamp attachment or attachment to four-bar accessory
- Optional four-bar accessory.
- Optional grid mount ring accessory.

HARMAN PROFESSIONAL INC. • 8500 BALBOA BOULEVARD • NORTHRIDGE • CA 91329 • USA • +1 818 893 8411

©2026 HARMAN Professional. All rights reserved. Martin® is a registered trademark of HARMAN Professional Inc. registered in the United States and/or other countries.
Features, specifications, and appearance are subject to change without notice.

REV: 20260828

MAC ONE

CREATIVE BEAMWASH MOVING HEAD WITH FRESNEL LENS

SPEC SHEET

ORDERING INFORMATION

MAC One in Cardboard (in cardboard box with cardboard inlay): P/N MAR-90250200HU

MAC One in dual SiP (in cardboard box with dual SiP foam flight case insert): P/N MAR-90250205HU (to be ordered in multiples of 2)

MAC One white in Cardboard (in cardboard box with cardboard inlay): P/N MAR-90250210HU

INCLUDED ITEMS

- Single omega bracket with 1/4 turn fasteners for rigging clamp attachment
- SoftLens
- Multi-Language Safety and Installation Manual

RELATED ITEMS

- MAC One Beam in cardboard: P/N MAR-90250500HU
- MAC One Beam in dual SiP: P/N MAR-90250505HU
- MAC One Beam white in cardboard: P/N MAR-90250510HU
- VDO Atomic Bold in cardboard: P/N MAR-90357703
- VDO Atomic Dot CLD in cardboard: P/N 90357701
- VDO Atomic Dot WRM in cardboard: P/N 90357702
- Martin Companion Cable (for firmware update over DMX): P/N 91616091
- Martin Companion Software (for firmware update over DMX/Ethernet): Free download from **martin.com**

ACCESSORIES

TRANSPORT AND STORAGE

- Flightcase for 8 x MAC One (fits MAC One Beam and MAC One).....P/N MAR-91515058
- Additional dual SiP Foam Flightcase Insert for MAC One Beam and MAC One ..... P/N MAR-91611865HU

CONSUMABLES

- CR123A 3-volt lithium battery..... P/N 05801011

SPARE PARTS

- Additional MAC One SoftLens.....P/N 5137039-00

POWER INPUT CABLES

- Power Input Cable, H07Rn-F, 2.5 mm2, bare ends to TRUE1 NAC3FX-W TOP (female), 1.5 m (4.9 ft.) ..... P/N 91611797
- Power Input Cable, SJOOW, 12 AWG, bare ends to TRUE1 NAC3FX-W TOP (female), 1.5 m (4.9 ft.) ..... P/N 91610173

POWER LINKING CABLES

- Power relay cable, H07RN-F, 2.5 mm2, TRUE1 to TRUE 1, 2.5 m (8.2 ft.) ..... P/N 91611796
- Power relay cable, SJOOW, 12 AWG, TRUE1 to TRUE 1, 2.5 m (8.2 ft.) ..... P/N 91610172

POWER CONNECTORS

- Cable Connector, Neutrik powerCON TRUE1 TOP Female .....P/N 91611789HU
- Cable Connector, Neutrik PowerCON TRUE1 TOP Male ..... P/N 91611788HU

PDE ADAPTER CABLES (for use in matrix with VDO Atomic Bold/Dot)

- BreakIn Cable Power-DMX-Ethernet to PDE .....P/N MAR-91700000
- BreakOut Cable PDE to Power-DMX-Ethernet ..... P/N MAR-91700001

INSTALLATION HARDWARE

- MAC One Family Fourbar ..... P/N MAR-91616127HU
- MAC One Family VDO Grid Mount Ring.... P/N MAR-91616128HU
- Set of 10 VDO Couplers ..... P/N MAR-91616129HU
- Dual VDO Header..... P/N MAR-91616130HU
- Set of 10 Single VDO Adapters.....P/N MAR-91616135
- G-clamp (suspension with fixture hanging vertically downwards only)..... P/N 91602003
- Quick Trigger Clamp (suspension with fixture hanging vertically downwards only)..... P/N 91602007
- Half-coupler Clamp..... P/N 91602005
- Safety Cable, SWL 60 kg, BGV C1 / DGUV 17, black..... P/N 91604006
- Safety Cable, SWL 60 kg, BGV C1 / DGUV 17, silver..... P/N 91604007

VERIFIED THIRD-PARTY ACCESSORIES

- MAC One Concentric Ring:.....P/N City Theatrical 2810
- MAC One Hexcel Louver:..... P/N City Theatrical 2811
- MAC One Top Hat:..... P/N City Theatrical 2812

HARMAN PROFESSIONAL INC. • 8500 BALBOA BOULEVARD • NORTHRIDGE • CA 91329 • USA • +1 818 893 8411

©2026 HARMAN Professional. All rights reserved. Martin® is a registered trademark of HARMAN Professional Inc. registered in the United States and/or other countries.
Features, specifications, and appearance are subject to change without notice.

REV: 20260828

MAC ONE

CREATIVE BEAMWASH MOVING HEAD WITH FRESNEL LENS

SPEC SHEET

TECHNICAL SPECIFICATIONS

DYNAMIC EFFECTS

Beam Dimmer/Shutter	0-100% continuous dimming, regular and random strobe, instant open and blackout
Beam Dimming options	Choice of four dimming curves
Beam Color Mixing	RGB, independently variable 0-100%
Beam Color Temperature Control	Variable 2,000-12,850 K
Beam Tint Control	Variable green-magenta shift Δuv -0.05 - +0.05
Beam Virtual Color Wheel	48 color presets, continuous rotation & random color
Zoom	Motorized with 1:5 ratio, including zoom pulse effect
Pan	Motorized 540°
Tilt	Motorized 225°
Beam P3 Mix	Videomapping of fixture with variable crossfade between DMX control and video control
Backlight Dimmer/Shutter	0-100% continuous dimming, regular and random strobe, instant open and blackout
Backlight Dimming options	Choice of four dimming curves
Backlight Color Mixing	RGB, independently variable 0-100%
Backlight Color Temperature Control	Variable 2,000-12,850 K
Backlight Tint Control	Variable green-magenta shift Δuv -0.05 - +0.05
Backlight Virtual Color Wheel	48 color presets, continuous rotation & random color
Backlight Pixelmapping	Individual RGB control of each of the 24 Backlight panels
Backlight P3 Mix	Videomapping of fixture with variable crossfade between DMX control and video control
Pre-programmed effects	Two ranges of FX on Beam, Backlight or Combination; independent or synchronized/combined
LED Frequency control	Variable LED PWM control

CONTROL AND PROGRAMMING

Control Protocols	DMX, RDM, Art-Net, RDM over Art-Net, sACN and P3
Protocol Detection	Automatic
DMX Modes	Compact, Basic, Ludicrous & Compact Direct
DMX Channels	20, 36, 108 & 20
16-bit Controllable Parameters	Beam & Backlight Dimming, Beam Color Mixing, Zoom, Pan and Tilt
Setting and Addressing	Display Menu, RDM, RDM over Art-Net or P3
Local User Interface	Backlit LCD Display with battery-powered operation
Fixture identification	User-settable ID number
DMX Compliance	USITT DMX512-A
RDM Compliance	ANSI/ESTA E1.20
Art-Net Compliance	Art-Net 1, 2, 3 and 4; including RDM over Art-Net
sACN Compliance	ANSI E1.31 - 2016
Martin P3 Compliance	P3 System Controller Software 5.1.0 or newer
DMX/RDM Transceiver	Galvanic-isolated RS-485
DMX/RDM Daisy-Chain Limit	32 fixtures
Ethernet Transceiver	10/100Mbit (with fail-safe bypass)
Ethernet Daisy-Chain Limit Recommendation	50 fixtures
Firmware Update	via DMX using Martin Companion or via Ethernet using Martin Companion / P3 System Controller

OPTICS

Front Lens Diameter	150 mm (5.91 in.)
Zoom range	1:5
Full Zoom Range at Half Peak (Beam Angle)	4.0° - 19.0°
Full Zoom Range at Tenth Peak (Field Angle)	6.0° - 27.0°
Beam Light Source	1 x 120 W RGBL LED
Backlight Light Source	24 x 0.25 W RGB LED
Max. Total Beam LED Engine Power	120 W
Max. Total Backlight LED Engine Power	6 W
Minimum LED Lifetime	> 50.000 hours (to > 70% luminous output)*

**Figure obtained under manufacturer's test conditions*

PHOTOMETRIC DATA

Light Engine Luminous Output	5,700 lumens
Fixture Luminous Output Wide	2,500 lumens
Fixture Luminous Output Narrow	1,900 lumens
Peak Luminous Intensity Narrow	375,000 cd
CCT	Variable 2,000 K - 12,850 K (+/- 200 K)
CRI (Color Rendering Index) (default)	≥ 77
CRI (Color Rendering Index) (optimized)	≥ 86
CQS (Color Quality Scale) (default)	≥ 86
CQS (Color Quality Scale) (optimized)	≥ 89
TM-30 Rf (IES TM-30-15 Fidelity Index) (default)	≥ 80
TM-30 Rf (IES TM-30-15 Fidelity Index) (optimized)	≥ 84
TM-30 Rg (IES TM-30-15 Gamut Index) (default)	≥ 114
TM-30 Rg (IES TM-30-15 Gamut Index) (optimized)	≥ 105
TLCI (Television Lighting Consistency Index) (default)	≥ 68
TLCI (Television Lighting Consistency Index) (optimized)	≥ 87
Beam LED Refresh Rate	2,400 Hz with adjustment (+/- 2%) via DMX
Backlight LED Refresh Rate	1,200 Hz
Binning	Tight color and flux binning
Calibration	Full Gamut Color Calibration of Beam and Backlight
Color Modes	Extended Color Mode and Calibrated Color Mode

**All Photometric Data measured in steady state (30 minutes warm-up time) at 25°C ambient*

**All Photometric Data measured at 6500 K white*

HARMAN PROFESSIONAL INC. • 8500 BALBOA BOULEVARD • NORTHRIDGE • CA 91329 • USA • +1 818 893 8411

©2026 HARMAN Professional. All rights reserved. Martin® is a registered trademark of HARMAN Professional Inc. registered in the United States and/or other countries.
Features, specifications, and appearance are subject to change without notice.

REV: 20260828

MAC ONE

CREATIVE BEAMWASH MOVING HEAD WITH FRESNEL LENS

SPEC SHEET

TECHNICAL SPECIFICATIONS

CONSTRUCTION

Housing	High-impact flame-retardant thermoplastic
Color	Black
Protection rating	IP20

INSTALLATION

Mounting options	Clamps on fixture, omega on fixture, Fourbar or VDO Grid Mount Ring
Mounting points on Fixture	1 pair of 1/4-turn points for 106 mm (4.17 in.) center-to-center omega bracket and two M12 threaded holes
Mounting points on Fourbar	1 fixed and 2 repositionable M12 threaded holes
Mounting points on VDO Grid Mount Ring	6 receivers for VDO Couplers (compatible with VDO Atomic Bold/Dot)
Mounting points on Dual VDO Header	2 repositionable M12 threaded holes and 4 receivers for VDO Couplers (compatible with VDO Grid Mount Ring and VDO Atomic Bold/Dot)
Mounting points on Single VDO Adapter	1 fixed M12 threaded hole, 4 fixed M6 threaded holes and 1 receiver for VDO Coupler (compatible with VDO Grid Mount Ring and VDO Atomic Bold/Dot)
Maximum vertical column height in VDO Grid Mount Rings	12 fixtures
Location	Indoor or outdoor protected from elements
Orientation	Any
Minimum distance to combustible materials	0.20 m (7.87 in.)
Minimum distance to illuminated surfaces	1.75 m (68.90 in.)

CONNECTIONS

AC mains power in/thru	Neutrik powerCON TRUE1 TOP
DMX and RDM data in/thru	Neutrik 5-pin locking XLR
Ethernet (Art-Net, sACN and P3) in/thru, including fail-safe bypass	Neutrik etherCON

ELECTRICAL

AC power	100-240 V AC nominal, 50/60 Hz
Power supply unit	Auto-ranging electronic switch mode
Typical half-cycle RMS inrush current at 230 V, 50 Hz	3.5 A
Typical earth-leakage current	0.50 mA
Power Factor	0.99 @ 100 V, 0.98 @ 120 V, 0.94 @ 208 V, 0.92 @ 230 V, 0.88 @ 240 V
Max current draw	2.0 A @ 100 V / 120 V, 0.9 A @ 208 V / 230 V / 240 V
Typical current draw	1.6 A @ 100 V, 1.4 A @ 120 V, 0.9 A @ 208 V, 0.8 A @ 230 V, 0.8 A @ 240 V*

Power Consumption

Maximum	180 W
Typical	160 W*
Idle	24 W*
Hibernation	9 W*

Measurements made at nominal voltage. Allow for a deviation of +/- 10%.

Typical: full output white, no effects moving, regulated fan speed.

Idle: no output, no effects moving, regulated fan speed.

Hibernation: no output, motors de-energized, fans stopped, wake-up procedure to re-use fixture.

THERMAL

Cooling	Forced air (temperature regulated, low noise, user-definable levels)
Max. ambient temperature (Ta max.)	40° C (104° F)
Min. ambient temperature (Ta min.)	5° C (41° F)
Max. surface temperature, steady state, at 40° C ambient	55° C (131° F)
Total heat dissipation (calculated +/- 10%)	546 BTU/hr.

ACOUSTIC DATA

Sound Pressure Level (LpA) @ 1m (default regulated fan mode, full output)	26.3 dB(A)
Sound Pressure Level (LpA) @ 1 m (constant fan mode ultra low)	23.0 dB(A)

ENVIRONMENTAL

RoHS	Compliant
REACH	Compliant
WEEE	Compliant
Proposition 65	Compliant
FSC	Certified cardboard inner and outer packaging
Efficacy (max output)	21.4 lm/W
LWR (Lumen-to-Weight Ratio)	568 lm/kg (258 lm/lbs.)

APPROVALS

Global CB Certification/IECEE	IEC 60598-2-17 (IEC 60598-1)
EU safety	EN 60598-2-17 (EN 60598-1), EN 62471, EN 62493
EU EMC	EN 55015; EN 55032; EN 55035; EN 61547; EN 61000-3-3
US safety	UL 1573
US EMC	FCC Part 15 Class B
Canadian safety	CSA C22.2 No. 166
Canadian EMC	ICES-003 Class B, ICES-005 Class B
Australia/NZ	RCM
United Kingdom	UKCA
Thailand	TIS 1955-2551
Korea	KS C 9832, KS C 9835

HARMAN PROFESSIONAL INC. • 8500 BALBOA BOULEVARD • NORTHRIDGE • CA 91329 • USA • +1 818 893 8411

©2026 HARMAN Professional. All rights reserved. Martin® is a registered trademark of HARMAN Professional Inc. registered in the United States and/or other countries.
Features, specifications, and appearance are subject to change without notice.

REV: 20260828

MAC ONE

CREATIVE BEAMWASH MOVING HEAD WITH FRESNEL LENS

SPEC SHEET

DIMENSIONS

PHYSICAL

MAC One Fixture

Width (across yoke) ..... 226 mm (8.90 in.)
Width (base) ..... 254 mm (10.00 in.)
Height (head straight up)..... 336 mm (13.23 in.)
Height (maximum)..... 349 mm (13.74 in.)
Depth (head)..... 220 mm (8.66 in.)
Depth (base) ..... 177 mm (6.97 in.)
Min. center-to-center distance in side-by-side installation ..... 300 mm (11.81 in.)
Weight ..... 4.40 kg (9.70 lbs.)

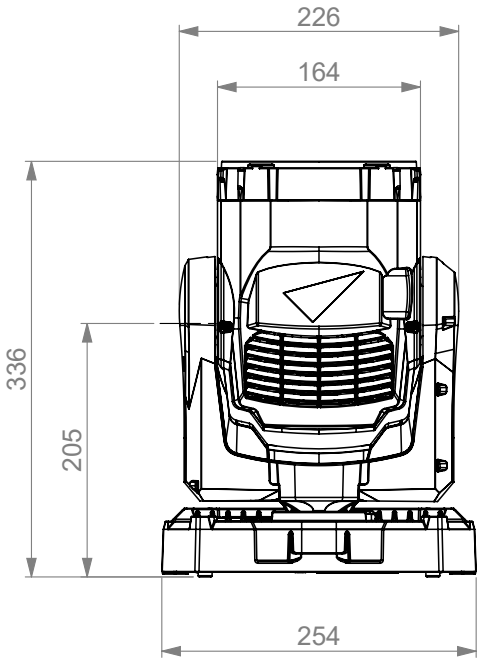

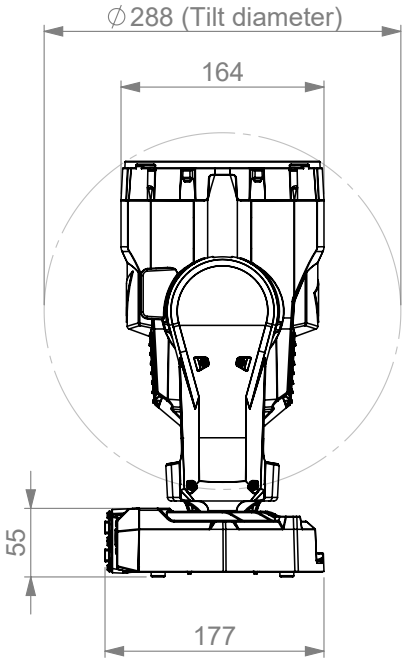

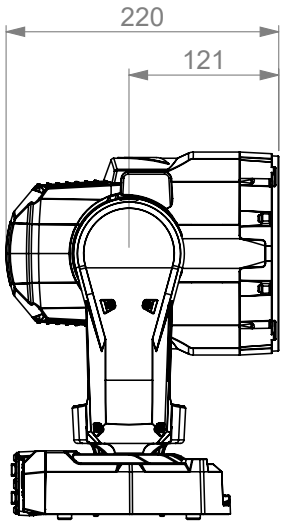

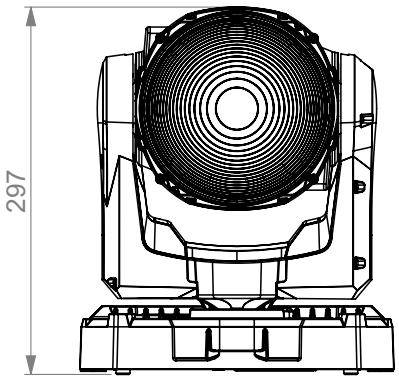

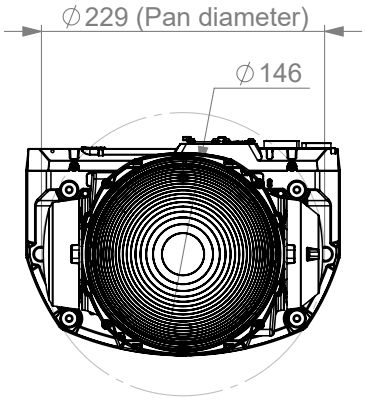

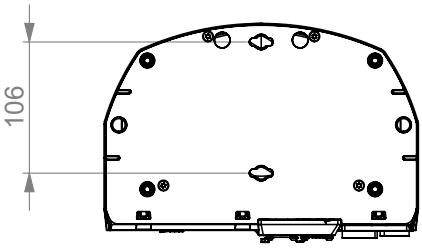

All dimensions are in mm

HARMAN PROFESSIONAL INC. • 8500 BALBOA BOULEVARD • NORTHRIDGE • CA 91329 • USA • +1 818 893 8411

©2026 HARMAN Professional. All rights reserved. Martin® is a registered trademark of HARMAN Professional Inc. registered in the United States and/or other countries.
Features, specifications, and appearance are subject to change without notice.

REV: 20260828

MAC ONE

CREATIVE BEAMWASH MOVING HEAD WITH FRESNEL LENS

SPEC SHEET

DIMENSIONS

PHYSICAL

MAC One Fourbar

Length ..... 1168 mm (45.98 in.)
Length (installed end-to-end) ..... 1200 mm (47.24 in.)
Width ..... 88 mm (3.46 in.)
Height (without feet)..... 42 mm (1.65 in.)
Height (with feet)..... 60 mm (2.36 in.)
Weight ..... 3.20 kg (7.05 lbs.)

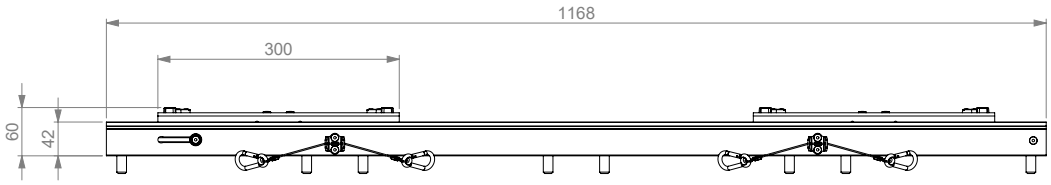

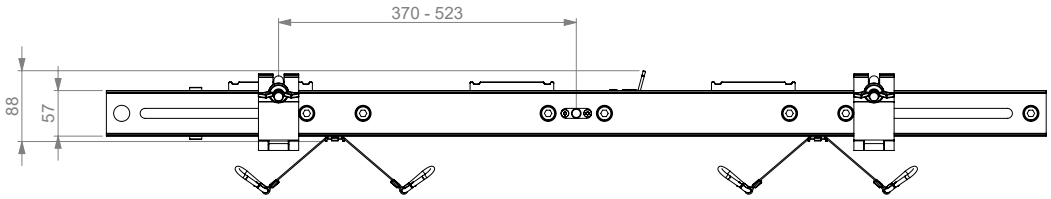

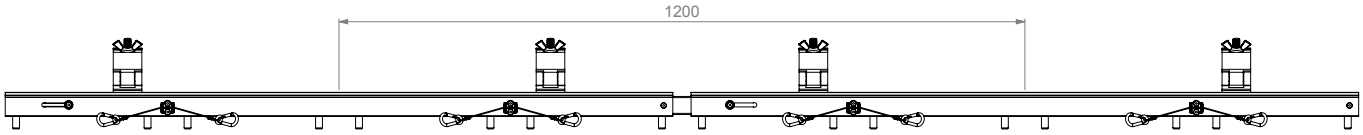

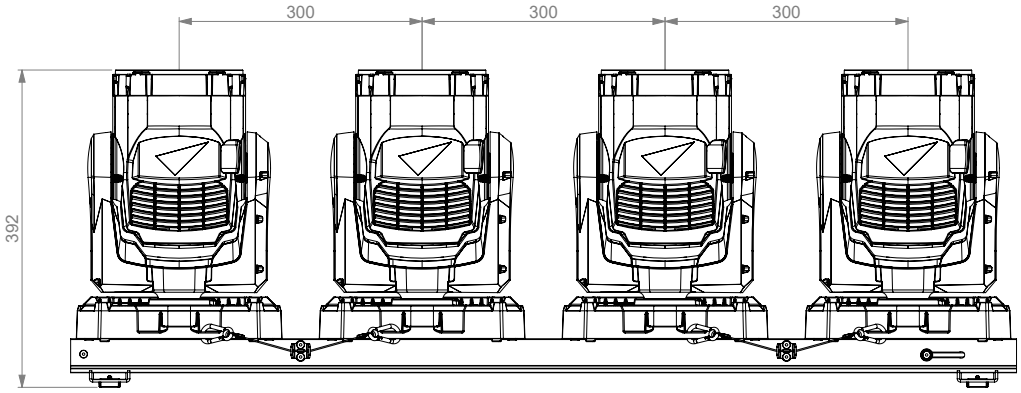

All dimensions are in mm

HARMAN PROFESSIONAL INC. • 8500 BALBOA BOULEVARD • NORTHRIDGE • CA 91329 • USA • +1 818 893 8411

©2026 HARMAN Professional. All rights reserved. Martin® is a registered trademark of HARMAN Professional Inc. registered in the United States and/or other countries.
Features, specifications, and appearance are subject to change without notice.

REV: 20260828

MAC ONE

CREATIVE BEAMWASH MOVING HEAD WITH FRESNEL LENS

SPEC SHEET

DIMENSIONS

PHYSICAL

MAC One VDO Grid Mount Ring

Width ..... 282 mm (11.10 in.)
Width (installed side-to-side)..... 300 mm (11.81 in.)
Height..... 282 mm (11.10 in.)
Height (installed side-to-side) ..... 300 mm (11.81 in.)
Depth..... 80 mm (3.15 in.)
Weight ..... 0.75 kg (1.65 lbs.)

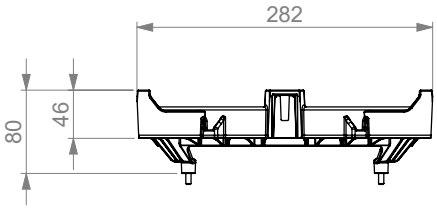

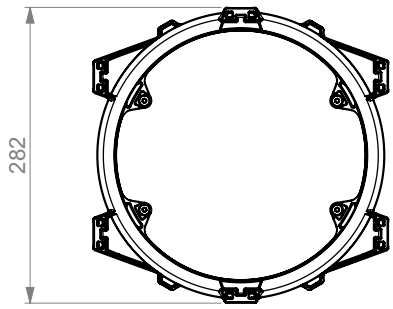

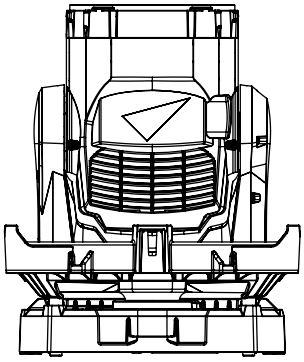

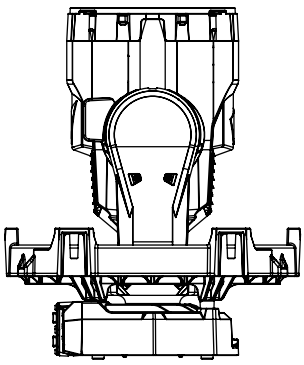

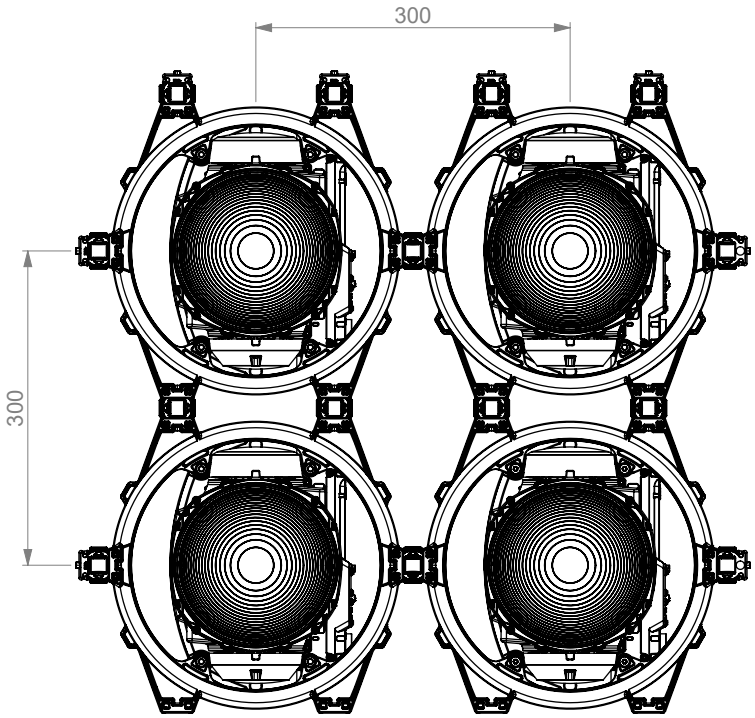

All dimensions are in mm

HARMAN PROFESSIONAL INC. • 8500 BALBOA BOULEVARD • NORTHRIDGE • CA 91329 • USA • +1 818 893 8411

©2026 HARMAN Professional. All rights reserved. Martin® is a registered trademark of HARMAN Professional Inc. registered in the United States and/or other countries.
Features, specifications, and appearance are subject to change without notice.

REV: 20260828

MAC ONE

CREATIVE BEAMWASH MOVING HEAD WITH FRESNEL LENS

SPEC SHEET

DIMENSIONS

PHYSICAL

MAC One Dual VDO Header

Length ..... 568 mm (22.36 in.)
Length (installed end-to-end) ..... 600 mm (23.62 in.)
Width ..... 85 mm (3.35 in.)
Height ..... 58 mm (2.28 in.)
Weight ..... 2.20 kg (4.85 lbs.)

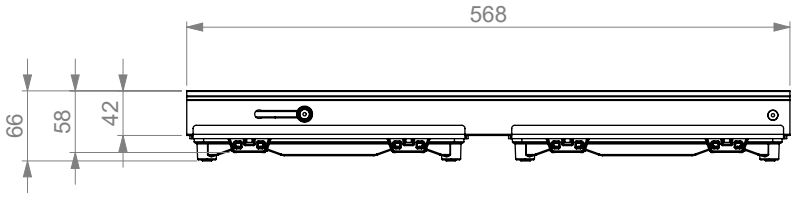

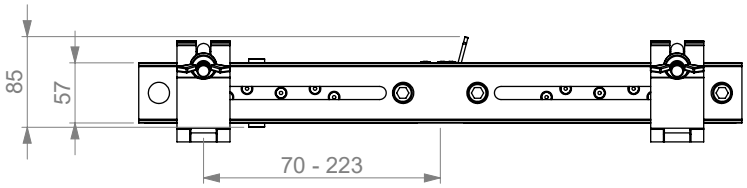

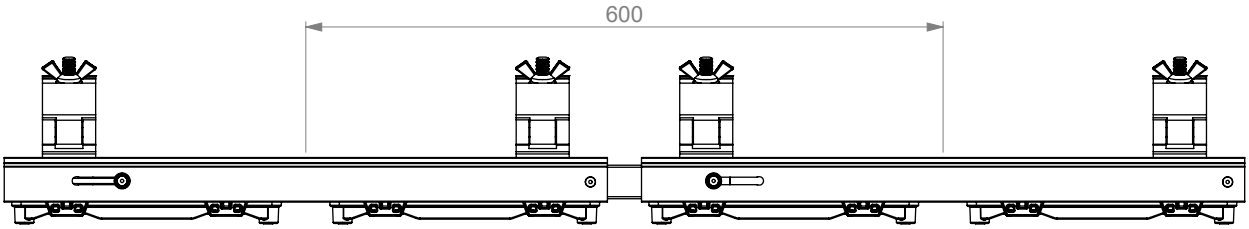

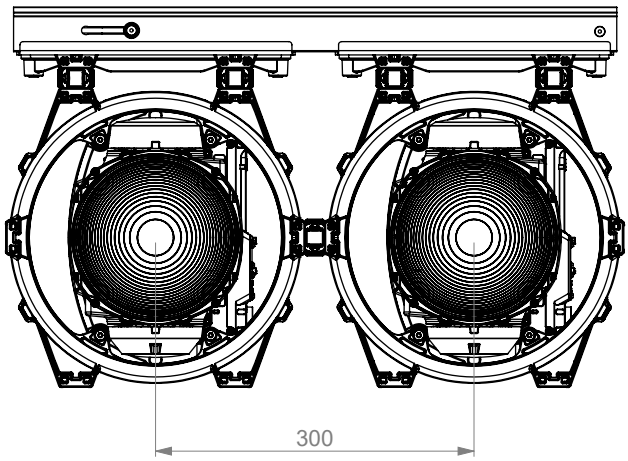

All dimensions are in mm

HARMAN PROFESSIONAL INC. • 8500 BALBOA BOULEVARD • NORTHRIDGE • CA 91329 • USA • +1 818 893 8411

©2026 HARMAN Professional. All rights reserved. Martin® is a registered trademark of HARMAN Professional Inc. registered in the United States and/or other countries.
Features, specifications, and appearance are subject to change without notice.

REV: 20260828

MAC ONE

CREATIVE BEAMWASH MOVING HEAD WITH FRESNEL LENS

SPEC SHEET

DIMENSIONS

PHYSICAL

MAC One Single VDO Adapter

Length ..... 50 mm (1.97 in.)
Width ..... 57 mm (2.24 in.)
Height ..... 58 mm (2.28 in.)
Weight ..... 0.20 kg (0.44 lbs.)

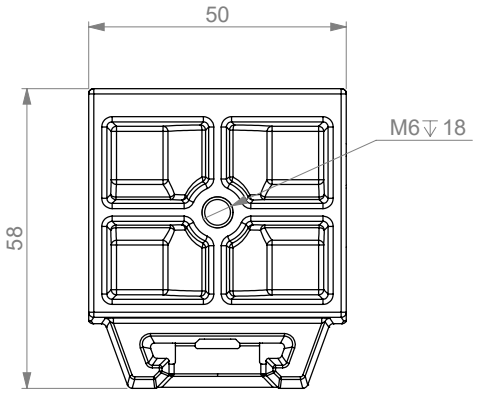

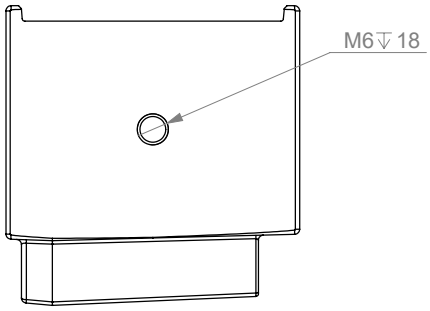

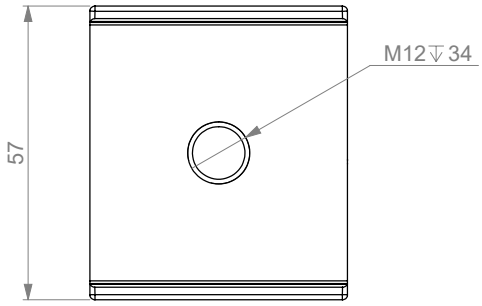

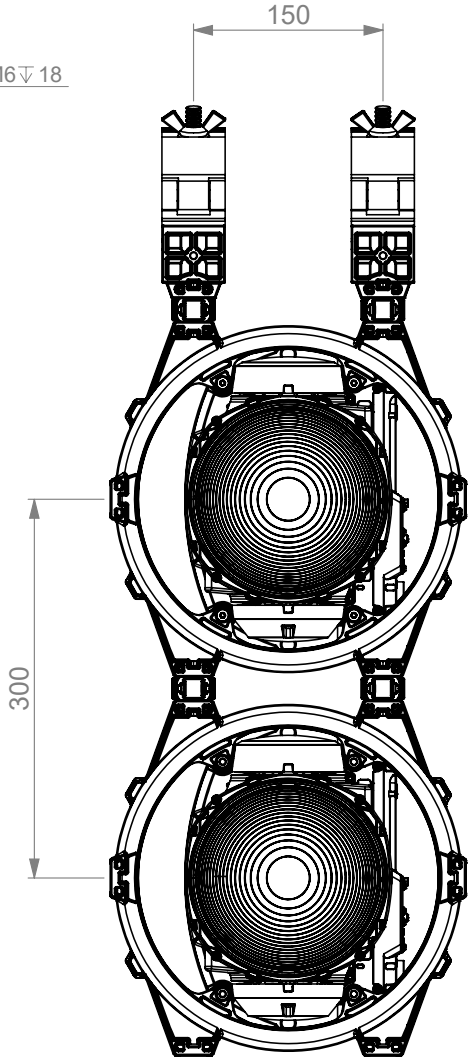

All dimensions are in mm

HARMAN PROFESSIONAL INC. • 8500 BALBOA BOULEVARD • NORTHRIDGE • CA 91329 • USA • +1 818 893 8411

©2026 HARMAN Professional. All rights reserved. Martin® is a registered trademark of HARMAN Professional Inc. registered in the United States and/or other countries.
Features, specifications, and appearance are subject to change without notice.

REV: 20260828