MAC Aura XIP

User Manual

(with Installation and Safety Manual attached)

Martin®

User Documentation update information

All important changes in the MAC Aura XIP user documentation are listed below.

Revision E

User Manual: Updated with improved *Fixture ID* function. Added virtual dimmer enhancement FX (Square Law dimming curve).

Safety Manual: Added warnings and guidelines about outdoor use as well as installation location and rigging hardware safety.

Covers firmware version 1.4.x

Revision D

Update to keep User Manual revision parallel to Safety and Installation Manual revision. Harman Pro USA contact details updated.

Revision C

Covers MAC Aura XIP firmware version 1.3.0.

Added two DMX modes that are backwards-compatible with the MAC Aura XB.

Added 'Compact Direct' DMX Mode.

Revision B

Covers MAC Aura XIP firmware version 1.1.0.
Added information on use in wet and dusty environments.
Wet and Acceleration menu renamed Wet and Orientation.
Minor improvement in wording of notes for Channel 21 in DMX Protocol table.

Revision A

First version released. Covers MAC Aura XIP firmware version 1.0.0

©2022-2026 HARMAN PROFESSIONAL DENMARK ApS. All rights reserved. Features, specifications and appearance are subject to change without notice. HARMAN PROFESSIONAL DENMARK ApS and all affiliated companies disclaim liability for any injury, damage, direct or indirect loss, consequential or economic loss or any other loss occasioned by the use of, inability to use or reliance on the information contained in this document. Martin is a registered trademark of HARMAN PROFESSIONAL DENMARK ApS registered in the United States and/or other countries.

HARMAN PROFESSIONAL DENMARK ApS, Olof Palmes Allé 44, 8200 Aarhus N, Denmark
HARMAN PROFESSIONAL, INC., 8500 Balboa Blvd., Northridge CA 91325, USA

www.martin.com

MAC Aura XIP User Manual with Safety and Installation Manual, P/N 5138005-00 Rev. E

Contents

Introduction . . . 4
- Operating the fixture . . . 4

Data links . . . 5
- Data via DMX cable . . . 5
- Data via Ethernet cable . . . 5

Effects . . . 7
- Shutter and strobe effects . . . 7
- Dimming . . . 7
- Color mixing . . . 7
- Virtual color wheel . . . 7
- Color temperature control . . . 7
- Green-magenta shift (tint) control . . . 7
- Zoom . . . 8
- Pan and tilt . . . 8
- LED PWM frequency control . . . 8
- Pre-programmed FX . . . 8
- Virtual dimmer enhancer . . . 8
- Pixel mapping . . . 9

Control panel . . . 10

Control options . . . 13
- DMX . . . 13
- P3 video . . . 14
- RDM . . . 14

Fixture setup . . . 18
- DMX address . . . 18
- DMX control mode . . . 18
- DMX universe . . . 18
- IP address . . . 18
- Subnet mask . . . 18
- Fixture ID . . . 18
- Personality . . . 18
- Managing fixture settings . . . 21
- Fixture information readouts . . . 21
- Temperatures . . . 22
- Wetness and base orientation . . . 22
- DMX signal monitoring . . . 22
- Test sequences . . . 22
- Manual control . . . 23
- Service . . . 23
- Calibration . . . 23
- Installing firmware . . . 24

Adjusting settings via DMX . . . 26
- Resetting . . . 26
- Illuminating the display . . . 26
- Control menu setting overrides . . . 26
- Adjusting calibration offsets via DMX . . . 26

DMX protocol . . . 28
- Compact Mode . . . 28
- Basic Mode . . . 31
- Extended Mode . . . 34
- Ludicrous Mode . . . 35
- Compact Direct Mode . . . 37
- XB Standard Mode . . . 39
- XB Extended Mode . . . 39

FX: pre-programmed effects . . . 40

Control panel menus . . . 48

Service and display messages . . . 54

Control orientation reference . . . 57

Introduction

Warning! Before installing, operating or servicing the MAC Aura XIP lighting fixture, read the latest version of the Safety and Installation Manual that is attached to this User Manual, paying particular attention to the Safety Precautions section.

Thank you for selecting a MAC Aura XIP moving head lighting fixture from Martin®.

The MAC Aura XIP is a premium moving head wash light with a radical aura filament effect and full pixel control with video mapping capabilities onto the beam, aura, or both. It is Martin's latest addition to the MAC Aura family of workhorse wash lights and the first fixture in its class to be rated for outdoor use, with close to zero compromises in weight, size, and aesthetics due to Martin's smart outdoor-capable design. It raises the bar for optical quality, featuring an even wash field with soft edge, minimal stray light, and high intensity mid-air beams with improved light engine control.

Safety and Installation Manual – User Manual

The MAC Aura XIP Safety and Installation Manual is supplied with the fixture as a printed booklet and also attached to this User Manual as one combined PDF file that is available for download from the MAC Aura XIP area of the Martin website at www.martin.com. The User Manual contains information that is mainly of interest for lighting designers and operators, whereas the Safety and Installation Manual contains important information for ALL users, especially installers and technicians.

We recommend that you check the Martin website regularly for updated manuals because we publish revised versions each time we can improve the quality of the information we provide and each time we release new firmware with changes or new features. Each time we revise a manual, we list any important changes on page 2 so that you can keep track of updates.

Operating the fixture

Before applying power to or operating the MAC Aura XIP:

- Read the ‘Safety Information’ section of the fixture’s Safety and Installation Manual that is supplied with the fixture and attached to this User Manual.
- Check that the installation is safe and secure.
- Check that the fixture is in perfect condition. Do not apply power to a fixture that is obviously damaged, or you may create a safety risk and make the damage worse.
- Check that the base is fastened securely so that the torque reaction when the head moves will not cause the base to move.
- Be prepared for the head to move suddenly. Check that there will be no risk of collision with persons or objects.
- Be prepared for the fixture to light up suddenly. Check that no-one is looking at the fixture from close range.

The fixture does not have an On/Off switch. To apply power to the fixture, connect the power input cable to a source of AC power that is within the range 100-240 V (nominal), 50/60 Hz. The fixture’s Neutrik powerCON TRUE1 TOP connectors can also be connected live or under load.

Note that whenever power is applied to the fixture, it will reset all effects and functions to their home positions and the fixture head will move. This process takes several seconds.

Data links

Warning! Before installing the MAC Aura XIP, read the latest version of the fixture's Safety and Installation Manual that is attached to this User Manual, paying particular attention to the Safety Precautions section.

The MAC Aura XIP has two pairs of connectors for control data In/Out:

- one pair of locking 5-pin XLR sockets that accept Neutrik TOP connectors, and
- one pair of etherCON sockets that accept Neutrik TOP connectors.

All sockets are protected by rubber caps. Keep the rubber caps in place at all times on unused sockets.

Data via DMX cable

The MAC Aura XIP has 5-pin locking XLR sockets (see **C** and **D** in Figure 2 on page 10) for DMX and RDM input and output via DMX cable. The pin-out on both sockets is:

- pin 1 to shield
- pin 2 to data 1 cold (-)
- pin 3 to data 1 hot (+).

Pins 4 and 5 are not used by the fixture but are bridged between input and output sockets. These pins can therefore be used as a pass-through connection for an additional data signal if required.

Tips for reliable data transmission via DMX cable

- Use shielded twisted-pair high-quality DMX cable.
- 24 AWG cable is suitable for runs up to 300 meters (1000 ft). Heavier gauge cable and/or an amplifier is recommended for longer runs.
- Do not use microphone cable, as standard microphone cable does not have the correct impedance and cannot transmit control data reliably over long runs.
- To split the data link into branches, use an optically isolated splitter-amplifier.
- Do not overload the DMX data link. You can connect up to a maximum of 32 devices on a serial DMX link.
- Install a DMX termination plug at the end of the DMX link.

Connecting to data via DMX cable

To connect the MAC Aura XIP to DMX and/or RDM data carried over DMX cable:

1. Connect the DMX data output from the controller to the MAC Aura XIP's data input (male XLR) socket using good-quality DMX cable.
2. Run DMX cable from the MAC Aura XIP's data output (female XLR) socket to the data input of the next fixture and continue until the link is complete.
3. Terminate the data link by connecting a 120 Ohm, 0.25 Watt resistor between the data 1 hot (+) and cold (-) conductors at the end of the link. If the link is divided into branches using a DMX splitter, terminate each branch of the link.

Data via Ethernet cable

The MAC Aura XIP has Neutrik etherCON data sockets (see **E** and **F** in Figure 2 on page 10) that support DMX and RDM over Art-Net and sACN as well as Martin P3. Either socket can be used for input and the other socket used for throughput.

The etherCON data sockets have a fail-safe bypass feature. This means that the fixture will relay a data signal from the socket used for input to the socket used for throughput even if power to the fixture is shut down or lost.

Tips for reliable data transmission via Ethernet cable

- Use shielded twisted-pair Ethernet cable of type S/UTP, SF/UTP, S/STP or SF/STP only. The cable must be rated Cat 5e or better.
- The cable shield must be electrically connected to connector housings, and the other devices on the data link must also support shielded connections.
- Note that the MAC Aura XIP is compatible with 10/100 Mbit Ethernet only. Do not connect the fixture to a network port or device that is fixed to Gigabit Ethernet speed. If you need to integrate a MAC Aura XIP in a Gigabit Ethernet network, use a network switch to allow the link towards the fixture to operate at 100 Mbit/s Ethernet speed.
- To split the data link into branches, use a standard network switch that is able to operate at 100 Mbit/s towards the fixtures.
- Even though every fixture has a fail-safe bypass mechanism and minimal latency insertion, we recommend that you avoid connecting more than 50 devices in a single daisy-chain or branch.
- Unlike DMX cable, Ethernet cable does not require termination at the end of a daisy-chain of fixtures.

Connecting to data via Ethernet cable

To connect the MAC Aura XIP to Art-Net, sACN or P3 via Ethernet cable:

1. Connect the Ethernet cable to either of the fixture's etherCON data sockets.
2. Run Ethernet cable from the fixture's other etherCON data socket to a data socket on the next fixture.
3. Continue connecting data sockets as described above until the link is complete.

Simultaneous DMX and P3 control

To control the MAC Aura XIP using DMX/Art-Net/sACN and P3 video at the same time, connect the DMX/Art-Net/sACN signal to the P3 System Controller. The P3 Controller will then merge DMX commands and video data together and send a combined data signal to fixtures over the Ethernet link using the P3 protocol.

Effects

This section gives details of the effects available in the MAC Aura XIP. See the DMX protocol table on page 28 for a list of channels and commands used to control the effects via DMX.

Where fine control is available, the main control channel sets the first 8 bits (the most significant byte or MSB), and the fine channels set the second 8 bits (the least significant byte or LSB) of the 16-bit control byte. In other words, the fine channel works within the position set by the coarse channel.

Note that from firmware v.1.2.0 the MAC Aura XIP also features two DMX modes which make the fixture mimic the behavior of a MAC Aura XB. In these modes only a subset of below effects is available, so that the fixture is aligned with the effects of the MAC Aura XB.

Shutter and strobe effects

The fixture's electronic shutter effect provides instant blackout and snap open as well as regular or random strobe and pulse effects with variable speed from approx. 1 Hz to 20 Hz.

Dimming

Smooth 0-100% overall dimming is available with 16-bit control resolution. Four dimming curves are available (see Figure 3 on page 19).

Color mixing

The fixture features 16-bit continuous RGB color mixing. Depending on DMX mode, you can control Beam and Aura color together or separately.

In Compact Direct DMX mode, the fixture offers direct 16-bit control of the RGBW emitters.

Virtual color wheel

The virtual color wheel contains 48 color presets containing popular colors.

In normal operation the virtual color wheel will override the color mixed by the RGB color mixing channels.

When using the fixture's FX, the virtual color wheel lets you select a background color while you use RGB color mixing channels to set the foreground color.

Color temperature control

Color temperature control is available on a dedicated CTC channel. You can adjust the fixture's color temperature smoothly and continuously to any point between 1000 K and 12 850 K.

In Compact Direct DMX mode, color temperature control is not available because in this mode you have direct control of the RGBW emitters, bypassing color algorithms in the fixture.

Green-magenta shift (tint) control

The Green-Magenta shift channel adjusts the tint of the white point.

- At values 127-128, the fixture outputs white on the black body curve.
- Values from 126 to 0 shift the white point towards magenta.
- Values from 129 to 255 shift the white point towards green.

In Compact Direct DMX mode, tint control is not available because in this mode you have direct control of the RGBW emitters, bypassing color algorithms in the fixture.

Zoom

The MAC Aura XIP's motorized zoom lens varies the beam angle from 6.3° to 35.3°.

Pan and tilt

The MAC Aura XIP offers 540° of pan and 220° of tilt.

See the pan/tilt orientation reference drawings at the end of this user manual for a guide to the direction of pan and tilt movement.

16-bit pan and tilt control are available. In each case, the second (LSB) DMX channel adjusts the position set on the first (MSB) channel.

It is possible to set limits for the pan and tilt range (see details on page 19).

LED PWM frequency control

The PWM frequency of the MAC Aura XIP's LEDs has been chosen carefully to avoid flickering on camera. In some rare situations – for example when using cameras with non-standard settings – it may be necessary to adjust the LED PWM frequency manually.

You can adjust the PWM frequency via DMX using channel 20. Note that the new PWM adjustment value is not stored permanently in the fixture, so you have to keep the channel 20 at the chosen value in order to keep the LED PWM frequency at the corresponding custom value.

You can adjust PWM frequency as follows:

DMX value sent on PWM frequency channel	LED PWM frequency
0 - 127	Adjustment in steps from 2400 to 3000 Hz
128	Default PWM frequency (3000 Hz)
129 - 254	No function
255	High-speed PWM Frequency Mode (24 000 Hz)

Table 1. PWM frequency adjustment values

High-speed PWM Frequency Mode drives the LEDs at 24 000 Hz. This frequency greatly reduces electronic switching noise but it gives slightly faster cut-off at the low end of the dimming range.

The default PWM frequency is 3000 Hz.

Pre-programmed FX

The MAC Aura XIP offers a range of pre-programmed effect macros that we simply call FX. See a full description under "FX: pre-programmed effects" on page 40

FX give instant access to complex dynamic effects with no need for time-consuming programming at the controller.

Virtual dimmer enhancer

When using virtual dimming on a lighting console on the Beam pixel RGB channels (i.e. channels 37-57 in Extended Mode and in Ludicrous Mode), or on the Aura Filament RGB channels (i.e. channels 58-93 in Ludicrous Mode), you may notice color shifts at the bottom end of the dimming range. This is caused by the fact that these RGB channels are only 8-bit and therefore do not offer enough resolution to maintain full color balance at that end of the dimming range.

This issue does not exist when you use the (real) 16-bit dimmers on DMX channels 2-3 for the Beam and channels 28-29 for the Aura in all DMX modes.

If you want to use virtual dimmers on your lighting console, you can improve the bottom end of the dimming range by activating the Virtual Dimmer Square Law FX macro using DMX channels 22 or 24 in Basic, Extended and Ludicrous Modes.

Pixel mapping

Extended and Ludicrous DMX modes give individual control of the Beam pixels and Aura filaments. These are numbered as shown below.

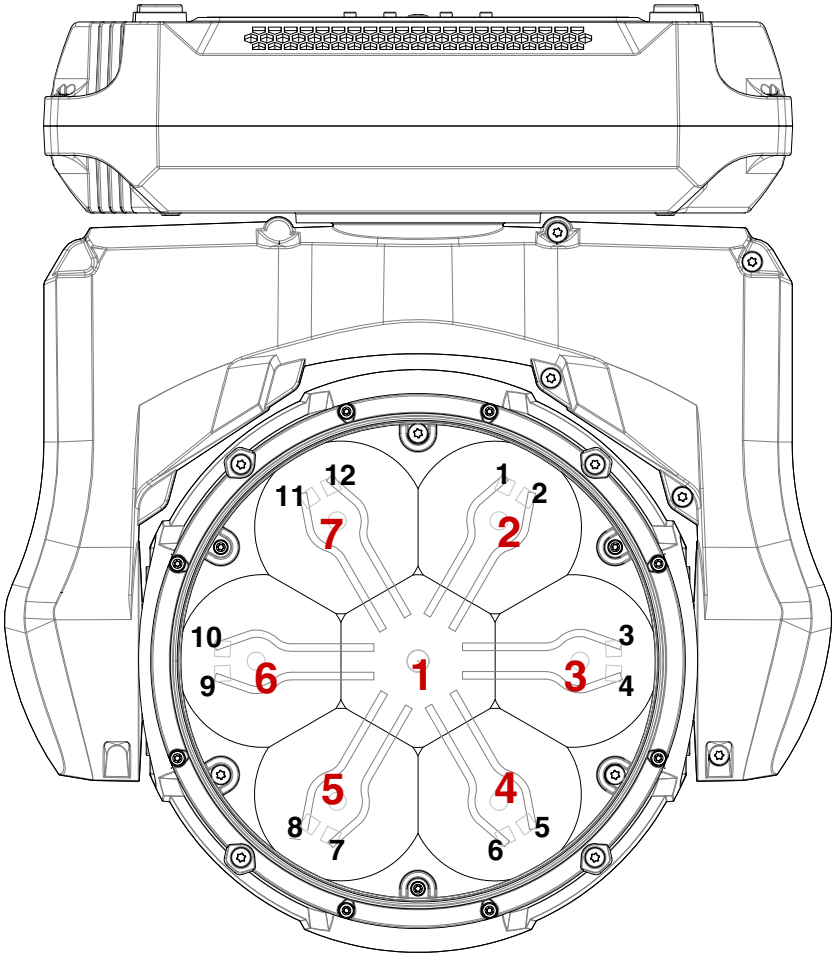

Beam pixels 1 - 7, Aura filaments 1 - 12.

Fixture in hanging orientation, pan at 50%, display and connectors at back of fixture

Figure 1. Beam pixel and Aura filament numbering

Control panel

You can configure individual fixture settings (such as the fixture's DMX address), read out data, execute service operations and view error messages using the fixture's backlit graphic display and control panel.

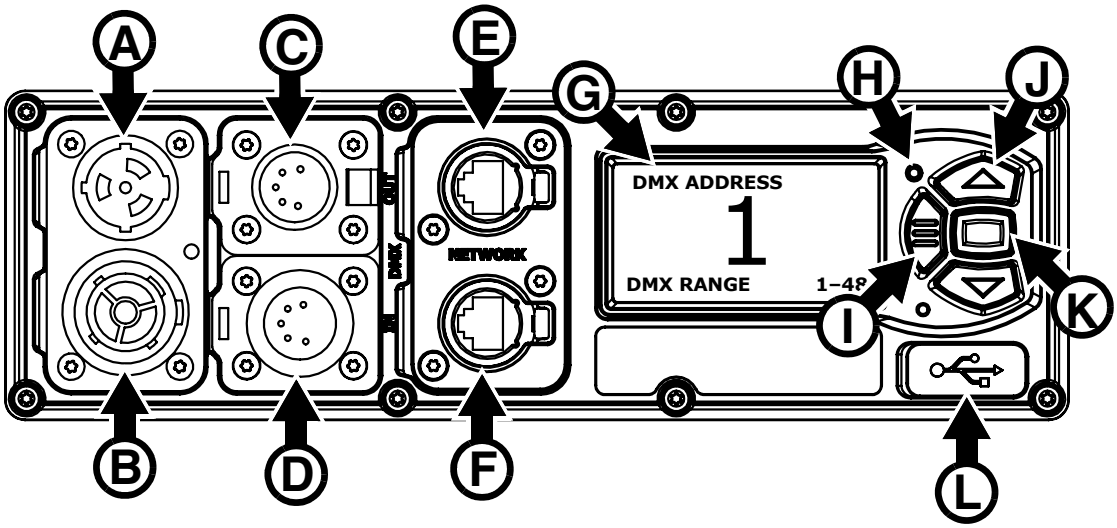

A - Mains power IN
B - Mains power THRU/OUT
C - DMX THRU/OUT (XLR)
D - DMX IN(XLR)
E - Data port A (Ethernet)
F - Data port B (Ethernet)
G - LCD Display
H - Status LED
I - MENU button
J- UP/DOWN buttons
K- ENTER button
L- USB port

Figure 2: Connections and control panel

When the MAC Aura XIP is powered on, it first boots and resets, then it displays its DMX address (or its fixture ID number, if one has been set) and any status messages (see page 54) in the display **G**.

The display can be set to automatically rotate to match standing or hanging fixture orientation in the **PERSONALITY** → **DISPLAY** menu or the Shortcuts menu (see "Shortcuts" on page 11).

Using the control panel

- Press the MENU button **I** or ENTER button **K** to access the menus.
- Use the UP and DOWN buttons to scroll up and down menus.
- Press the ENTER button **K** to enter a menu or make a selection.
- The currently selected item in a menu is indicated by a star ✻.
- Press the MENU button **I** to step backwards through the menus.

Status LED

The LED **H** next to the control buttons indicates fixture status by showing a color and DMX status by flashing or lighting constantly:

- **GREEN**: All parameters normal.
- **AMBER**: Warning (service interval exceeded, for example).
  - If **ERROR MODE** is set to **NORMAL**, the warning message will be shown in the display.
  - If **ERROR MODE** is set to **SILENT**, the display must be activated by pressing the ENTER button **K** to display the warning message.

- **RED**: Error detected.
  - If **ERROR MODE** is set to **NORMAL**, the error message will be shown in the display.
  - If **ERROR MODE** is set to **SILENT**, display the error message by entering the menus and going to **SERVICE** → **ERROR LIST**.
- **FLASHING**: No DMX signal detected.
- **CONSTANT**: Valid DMX signal detected.

The status LED remains active even if the display enters sleep mode.

Battery power

Warning! The fixture's lithium battery is not rechargeable. Do not try to recharge it. Battery replacement must be carried out by an authorized Martin service agent with service instructions from Martin. If the battery is discharged, contact an authorized Martin service agent for replacement.

The MAC Aura XIP contains a lithium battery that gives access to the most important functions in the control panel when the fixture is not connected to AC power. The following functions are available on battery power:

- DMX address
- DMX Mode
- Fixture ID
- Personality settings (pan/tilt, cooling, fan clean mode, dimming curve, DMX reset, parameter shortcuts, all display settings, error mode)
- Default settings
- Information (Power On Hours and Power Cycles counters, Software version)
- Error list

To activate the display when the fixture is not connected to power, press the MENU button **I**. Press again to enter the menus. The display extinguishes after 10 seconds with no user input and the control panel is de-activated after 1 minute with no user input. Press the MENU button **I** again to re-activate.

Shortcuts

If you hold the MENU button **I** pressed in for 2 - 3 seconds, a shortcut menu with the most important commands appears. Select a command with the UP and DOWN buttons **J** and press the ENTER button **K** to activate, or press the MENU button **I** again to cancel.

- **RESET ALL** resets the whole fixture
- **ROTATE DISPLAY** rotates the MAC Aura XIP display 180°

Settings stored permanently

The following settings are stored permanently in the fixture memory and are not affected by powering the MAC Aura XIP off and on or by updating the fixture software:

- DMX address
- DMX mode
- DMX universe
- Fixture ID
- Personality settings (pan/tilt, cooling, dimming curve, DMX reset, effect shortcuts, display settings, error mode, etc.)
- Resettable and non-resettable counters
- Service settings (adjustment, calibration)

These settings can be returned to factory defaults using the control menus or via DMX.

Activating service mode

Holding the MENU and ENTER buttons **I** and **K** both pressed in while powering the fixture on puts the fixture into service mode, in which pan and tilt are disabled and a **SERV** warning appears in the display. Service mode removes the risk of unexpected head movement during service adjustments.

To take the fixture out of SERVICE mode, power the fixture off, then reapply power and allow the fixture to start normally.

Control options

You can control the MAC Aura XIP using DMX and/or Martin P3 protocol. The fixture auto-senses the type of data that it is receiving and will respond correctly with no need for manual protocol selection.

The following options are available:

- DMX control over standard DMX cable connected to the fixture's 5-pin XLR connectors.
- DMX control using Art-Net over Ethernet cable connected to the fixture's etherCON connectors.
- DMX control using streaming ACN over Ethernet cable connected to the fixture's etherCON connectors.
- DMX control over DMX cable and P3 video data over Ethernet cable.
- P3 video data with embedded DMX commands over Ethernet cable. If you connect DMX / Art-Net / sACN to the P3 system controller, the controller can merge the DMX commands into the P3 signal and send them to the fixture over Ethernet.

The P3 Mix DMX channels let you choose how the fixture should behave if it receives both DMX data and P3 video data. You can use the P3 video pixel data to control the intensity and/or the color of the fixture's output with real-time control.

Fail-safe connection

The MAC Aura XIP has a fail-safe network connection. If the fixture loses power or if you shut it down, it will continue to relay an Ethernet signal, and the Art-Net / sACN / P3 signal to the other networked fixtures in the daisy chain will not be interrupted.

Data rate

Any Ethernet switch used to relay Art-Net, streaming ACN or P3 data to the MAC Aura XIP must be capable of running at 10/100 Mbps speed, as the fixture does not support Gigabit Ethernet data rates.

DMX

The MAC Aura XIP accepts a DMX-512A data signal.

DMX setup

The DMX address, also known as the start channel, is the first channel used to receive instructions from the controller. For independent control, each fixture must be assigned its own control channels. If you give two fixtures of the same type the same address, they will behave identically. Address sharing can be useful for diagnostic purposes and symmetrical control, particularly when combined with the inverse pan and tilt options.

DMX addressing is limited to make it impossible to set the DMX address so high that you are left without enough control channels for the fixture.

To set the fixture's DMX address:

1. Press MENU to open the main menu. Scroll to **DMX SETUP**.
2. Press ENTER to enter the **DMX ADDRESS** menu, then scroll to the desired address and press ENTER to save.

DMX modes

The **CONTROL MODE** menu lets you set the MAC Aura XIP to one of the fixture's DMX operating modes:

- **Compact Mode** offers 8-bit control of the strobe/shutter, color temperature, green-magenta shift, virtual color wheel, fixture control/settings and PWM frequency. It also offers 16-bit control of the global dimmer, global RGB color mixing, zoom, pan and tilt.
- **Basic Mode** offers all the effects of Compact Mode plus 8-bit control of fading between Beam DMX and P3 video control, FX selection, adjustment and synchronization, global Aura backlight, Aura RGB color mixing, Aura CTC, Aura Green-Magenta shift, fading between Aura DMX and P3 video control and the Aura virtual color wheel. It also offers 16-bit control of Aura dimming.

- **Extended mode** includes all the functionality of Basic Mode but adds 8-bit RGB color mixing control of each individual Beam pixel.
- **Ludicrous mode** includes all the functionality of Extended Mode but adds 8-bit RGB color mixing control of each individual Aura filament.
- **Compact Direct Mode** includes all the functionality of Compact Mode, but with direct control over the white emitters added and color temperature, tint and virtual color wheel removed.
- **XB Standard mode** makes the MAC Aura XIP mimic the behavior of a MAC Aura / MAC Aura XB in Standard mode. Please consult the MAC Aura XB user manual (available for download from the MAC Aura XB area of the Martin website at www.martin.com) for details of this DMX mode.
- **XB Extended mode** makes the MAC Aura XIP mimic the behavior of a MAC Aura / MAC Aura XB in Extended mode. Please consult the MAC Aura XB user manual (available for download from the MAC Aura XB area of the Martin website at www.martin.com) for details of this DMX mode.

To set the fixture's DMX mode:

1. Press ENTER to enter the main menu.
2. Scroll to **CONTROL MODE**, then press ENTER. Scroll to select **COMPACT**, **BASIC**, **EXTENDED**, **LUDICROUS**, **COMPACT DIRECT**, **XB STANDARD** or **XB EXTENDED**, then press ENTER to save.
3. Press MENU to exit.

P3 video

The MAC Aura XIP accepts video data using Martin's proprietary P3 video protocol that has been a well-established standard in the industry for over 15 years. It lets you send a video signal from a media server or other video source to P3-compliant creative LED fixtures and moving heads over Ethernet cable using Martin's reliable P3 data protocol.

The intuitive graphic user interface in Martin P3 controllers lets you visualize and set up a custom installation that can contain a huge number of fixtures in any kind of physical arrangement within a few minutes. Device identification is automatic. You can arrange devices on the monitor using drag-and-drop. Latency from video input to output on fixtures is extremely low, while there is no latency between fixtures as they are fully synchronized via the P3 protocol. If you use P3 you do not need to worry about IP addresses, as P3 does not use IP addresses or IP communication.

The P3 protocol will supply both DMX data and video pixel data to fixtures over a network cable. On the MAC Aura XIP you can use the video pixel data to control the intensity and/or the color of the fixture's Beam pixels, Aura filaments or both with real-time control using the P3 Mix DMX channels.

RDM

The MAC Aura XIP can communicate over standard DMX cable and over Art-Net and sACN Ethernet links using RDM (Remote Device Management) in accordance with ESTA's *American National Standard E1.20-2006*.

RDM is a bi-directional communications protocol for use in DMX512 control systems, it is the open standard for DMX512 device configuration and status monitoring.

The RDM protocol allows data packets to be inserted into a DMX512 data stream without affecting existing non-RDM equipment. It allows a console or dedicated RDM controller to send commands to and receive messages from specific fixtures.

Note that a firmware update can sometimes expand a fixture's RDM functionality. If this happens, the firmware release notes will give details.

RDM ID

Each fixture has a factory-set RDM UID (unique identification number) that makes it addressable and identifiable in RDM systems. The number can be found in the control panel **INFORMATION** menu under **RDM UID**.

Martin Companion and RDM

The Martin Companion Windows application (downloadable free of charge from the Martin website at www.martin.com) gives access to all the fixture's RDM parameters. It supports the fixture's standard and manufacturer-specific PIDs. It gives full control of all fixture settings remotely, eliminating the need to physically climb to the fixture in a rig, for example.

Martin Companion can also update multiple RDM parameters at once, using the built-in Settings Template system.

Supported RDM PIDs

The fixture supports the standard RDM PIDs (Parameter IDs) required by ESTA plus manufacturer-specific PIDs that give a range of configuration options.

See the following tables.

Standard RDM Parameter IDs

GET allowed	SET allowed	RDM parameter IDs	Notes
Network Management			
		DISC_UNIQUE_BRANCH	
		DISC_MUTE	
		DISC_UN_MUTE	
Status Collection			
✓		QUEUED_MESSAGE	
✓		STATUS_MESSAGES	
✓		STATUS_ID_DESCRIPTION	
	✓	CLEAR_STATUS_ID	
RDM Information			
✓		SUPPORTED_PARAMETERS	
✓		PARAMETER_DESCRIPTION	
Product information			
✓		DEVICE_INFO	
✓		DEVICE_MODEL_DESCRIPTION	
✓		MANUFACTURER_LABEL	
✓	✓	DEVICE_LABEL	
✓	✓	FACTORY_DEFAULTS	
✓		SOFTWARE_VERSION_LABEL	
DMX Setup			
✓	✓	DMX_PERSONALITY	
✓		DMX_PERSONALITY_DESCRIPTION	
✓	✓	DMX_START_ADDRESS	
✓		SLOT DESCRIPTION	
Sensors			
✓		SENSOR_DEFINITION	
✓		SENSOR_VALUE	
Usage information			
✓		DEVICE_HOURS	
✓		DEVICE_POWER_CYCLES	
Display settings			
✓	✓	DISPLAY_INVERT	
✓	✓	DISPLAY_LEVEL	
Configuration			

✓	✓	PAN_INVERT	
✓	✓	TILT_INVERT	
Network configuration			
✓		LIST_INTERFACES	
✓		INTERFACE_LABEL	
✓		INTERFACE_HARDWARE_ADDRESS_ TYPE1	
✓		IPV4_DHCP_MODE	
✓		IPV4_CURRENT_ADDRESS	
✓	✓	IPV4_STATIC_ADDRESS	
	✓	INTERFACE_APPLY_CONFIGURATION	
Control			
✓	✓	IDENTIFY_DEVICE	Highlight device in rig
	✓	RESET_DEVICE	
✓	✓	PERFORM_SELFTEST	
✓		SELF_TEST_DESCRIPTION	

Manufacturer-specific RDM Parameter IDs

GET allowed	SET allowed	RDM parameter IDs (slot 21-22)	Notes
DMX protocol			
✓	✓	DMX_RESET_ENABLE	
Fixture behavior			
✓	✓	STAND_ALONE_OPERATION_ENABLED	
✓	✓	STORE_SCENE	
✓	✓	EFFECT_SPEED	
✓	✓	EFFECT_SHORTCUTS_ENABLE	
✓	✓	DISPLAY_ERRORS_ENABLE	
✓	✓	DIMMER_CURVE	
✓	✓	COLOR_MODE	Calibrated / Extended
✓	✓	VIDEO_TRACKING	
✓	✓	DISPLAY_AUTO_OFF	
✓	✓	DISPLAY_CONTRAST	
✓	✓	HIBERNATION_MODE	
✓	✓	TUNGSTEN_MODE	
✓	✓	AURA_IN_COMPACT_MODE	Aura On/Off in Compact Mode
Outdoor use functions			
✓	✓	AUTO_EMPTY_WATER	
✓	✓	OUTDOOR ACTIONS	0 = Stop, 1 = Empty, 2 = Dry Off, 3 = Safe Parking
Pan/tilt			
✓	✓	PAN_TILT_SPEED	Fast - Smooth
✓	✓	PAN_TILT_LIMITATION_ENABLE	
✓	✓	PAN_LIMITATION_MINIMUM	
✓	✓	PAN_LIMITATION_MAXIMUM	
✓	✓	TILT_LIMITATION_MINIMUM	
✓	✓	TILT_LIMITATION_MAXIMUM	
	✓	PAN_TILT_LIMITATION_RESET	

Cooling fan operation			
✓	✓	FAN_MODE	
✓	✓	FAN_CLEAN	
Fixture information			
✓	✓	FIXTURE_ID	
✓		SERIAL_NUMBER	

Fixture setup

The onboard control panel lets you configure the fixture using a range of fixture settings. Note that many of these settings are also available on the Control / settings DMX channel (see “Adjusting settings via DMX” on page 26).

DMX address

The fixture lets you set its DMX address or DMX start channel from 001 to the highest number available in one 512-channel DMX universe that let you operate the fixture completely. This depends on the fixture’s DMX footprint in the DMX mode that it is currently set to.

DMX control mode

You can set the fixture to Compact, Basic, Extended, Ludicrous, Compact Direct, XB Standard or XB Extended DMX modes to match the control options that you would like to use and the number of DMX channels that you have available for the fixture. See “DMX protocol” on page 28 and the MAC Aura XB User Manual for details of these modes.

DMX universe

You can set the fixture to use the DMX channels in one DMX universe numbered from 1 - 63 999.

IP address

When sending control data to the fixture using its Ethernet connectivity, you can either:

- use the default IP address (which is displayed as soon as you open the **IP ADDRESS** menu), or
- manually set the fixture’s IP address.

Subnet mask

As with the fixture’s IP address, when operating in a networked installation you can either:

- use the default Subnet mask (which is displayed as soon as you open the **SUBNET MASK** menu), or
- manually set the fixture’s Subnet mask.

Fixture ID

The Fixture ID is a number in the range 1-65535 which can be set freely by the user. It can help you easily identify a fixture in an installation if you set Fixture IDs in line with how fixtures are numbered on the lighting console. The Fixture ID is also used by Martin P3 System Controllers to link fixtures on the P3 workspace with actual fixtures in the rig.

Personality

The **PERSONALITY** menu provides several options that let you customize the fixture for different applications:

- The **PAN/TILT** menu offers the following options:
  - **PAN INVERT** and **TILT INVERT** let you invert the direction of pan and tilt movement. This can be a fast way of setting symmetrical action in multiple fixtures with no need to reprogram cues.

- **LIMIT PAN/TILT** lets you define minimum and maximum limits for pan and tilt angles so that you can install fixtures close to obstacles (such as other fixtures or trusses) with no risk of collision, so that the beam will only hit a certain area of a stage or set, or so that you can avoid the fixture shining into the eyes of the audience.

  PAN MIN and **TILT MIN** set minimum limits for pan and tilt, and **PAN MAX** and **TILT MAX** likewise set maximum limits. The fixture's pan and tilt movement will remain in a 'safe zone' within the limits that you set.

  * To set the limits using the control panel menus, go into the **LIMIT PAN/TILT** menu and enter the minimum and maximum limits for pan and tilt as the 16-bit values that you would use to move pan and tilt to those positions via DMX. The range of values available is -32767 to 32768.
  * To set the limits via DMX, move the head using the pan and tilt DMX channels to the position where you want to set minimum pan and tilt limits, then enable *Pan minimum* and *Tilt minimum* limits on the Control/Settings DMX channel, sending values for at least 1 second to activate them. Use the same method to set the maximum pan and tilt limits.

  Note that when you power the fixture off, the head may move under its own weight to a position that is outside its pan and tilt limits.

  RESET PAN/TILT LIMITS deletes any custom pan/tilt limits that have been set and gives the fixture its full pan/tilt range.

- The **SPEED** menu gives you two movement speed options:
  - **PAN/TILT SPEED** lets you set pan and tilt movement to **FAST** (optimized for speed) or **SMOOTH** (optimized for smooth movement – useful for slow movements in long-throw applications).
  - **EFFECT SPEED** lets you set all the fixture's effects to **FOLLOW P/T** (effects speed follows the speed set for pan/tilt), **FAST** (optimized for speed) or **SLOW** (optimized for smooth movement – useful for slow, gradual effects changes).
- **DIMMER CURVE** provides four dimming options (see Figure 3):
  - **LINEAR** – (optically linear) the increase in light intensity appears to be linear as DMX value is increased.
  - **SQUARE LAW** – light intensity control is finer at low levels and coarser at high levels.
  - **INV SQUARE LAW** – light intensity control is coarser at low levels and finer at high levels.
  - **S-CURVE** – light intensity control is finer at low levels and high levels and coarser at medium levels. This curve emulates the RMS voltage dimming characteristics of an incandescent lamp.

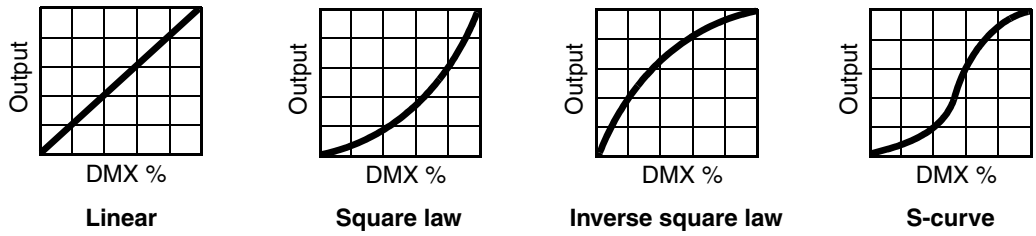

Figure 3: Dimming curve options

- **TUNGSTEN EMULATOR** gives the warm appearance and dimming characteristics of a tungsten lamp fixture.

  Note that if you want to activate tungsten emulation on the Aura filaments only, you can do this with an FX (see "FX: pre-programmed effects" on page 40).
- **COLOR MODE** offers two options for RGB color mixing that affect color saturation and evenness between fixtures:
  - **Extended Color** mode optimizes LED deployment for color saturation and gets the deepest color saturation possible from the LEDs. The white color point is calibrated and even across different fixtures, but as the fixture approaches full color saturation there can be very small differences in color rendition between different fixtures.
  - **Calibrated Color** mode optimizes LED deployment for even color rendition between fixtures. All fixtures display identical color from white point to full color saturation, and maximum color saturation levels are limited slightly to ensure this.

    Calibrated Color Mode may be useful if you notice slight differences in color performance across multiple fixtures. Note that the colors obtained through RGB color mixing in Calibrated Color Mode may

differ significantly from the colors obtained in Extended Color Mode. Multiple fixtures in the same installation should normally all be set to either Extended or Calibrated Color Mode in order to ensure the most consistent color behavior

- **VIDEO TRACKING** optimizes performance if the MAC Aura XIP is used with a video source.

  In normal use, the fixture processes the signal it receives, tracking (or smoothing out) changes in values in order to ensure smooth fading between colors and/or intensities. This signal processing takes fractions of a second and is normally invisible, but if the fixture is used to display video the processing can interfere with video response times. If you enable video tracking, the fixture does not 'smooth out' input but instead snaps instantly when a value changes.

  If you enable video tracking, some lack of smoothness may be visible when dimming slowly via DMX at low intensity levels.

  For best results, we recommend that you enable video tracking when using video as a source and disable it (the default setting) during DMX control.

- **DMX RESET** lets you reduce the risk of accidentally sending a reset command via DMX that might cause an unwanted blackout and/or unwanted light output in the middle of a show, for example, that will take several seconds to recover from.

- **EFFECT SHORTCUT** determines whether the virtual color wheel takes the shortest virtual path between two positions (shortcuts enabled), crossing the open position if necessary, or always avoids the open position (shortcuts disabled).

- **COOLING MODE** lets you select between five cooling fan options:
  - **CONSTANT FAN FULL** optimizes cooling fan operation for the lowest possible temperature by setting cooling fans to run constantly at full speed. Light output intensity is kept at its maximum, as the LEDs operate at the coolest temperature possible.
  - **CONSTANT FAN MEDIUM** sets cooling fans to run constantly at medium speed. Light output intensity is reduced if necessary to prevent the fixture from exceeding its maximum operating temperature during medium speed fan operation.
  - **CONSTANT FAN LOW** sets cooling fans to run constantly at low speed. Light output intensity is reduced if necessary to prevent the fixture from exceeding its maximum operating temperature during low speed fan operation.
  - **CONSTANT FAN ULOW** (ULTRALOW) optimizes cooling fan operation for the lowest possible noise by setting cooling fans to run constantly at ultra-low speed. Light output intensity is reduced if necessary to prevent the fixture from exceeding its maximum operating temperature during ultra-low speed fan operation.
  - **REGULATED FANS** adjusts cooling fan operation to balance the fixture's noise and light output characteristics. Cooling fans are set to the lowest speed possible and then increased as fixture operating temperature rises. If the fixture reaches maximum operating temperature and full-speed fan operation is not enough to control fixture temperature, light output intensity is limited to keep the fixture within its operating temperature range.

  Because the MAC Aura XIP adjusts the maximum possible output intensity level as a function of fixture temperature, the choice of cooling mode will affect the maximum intensity level available. The exact level will vary depending on factors such as ambient temperature, airflow in the installation etc., but to give an approximate indication, you can expect to obtain the following intensity levels in the fixture's different cooling modes relative to the CONSTANT FAN FULL mode:
    - REGULATED FANS: 93%
    - CONSTANT FAN ULOW: 88%
    - CONSTANT FAN LOW: 93%
    - CONSTANT FAN MEDIUM: 96%
    - CONSTANT FAN FULL: 100%

- **DISPLAY** offers the following options for the LCD display:
  - **DISPLAY SLEEP** sets the fixture display to black out a certain period after the last key press on the fixture's control panel. If ERROR MODE (see below) is set to NORMAL, the display will light up again if the fixtures detects and error.
  - **DISPLAY INTENSITY** lets you adjust the brightness of the display backlighting by setting the intensity to a level from 10% to 100%.
  - **DISPLAY ROTATION** rotates the display manually through 180° so that it can be read easily no matter how the fixture is oriented.

- **DISPLAY CONTRAST** lets you adjust the contrast of the LCD display on the fixture's integrated control panel.

- **ERROR MODE** enables or disables error warnings.
  - If set to **NORMAL**, the display is activated and lights up if the fixture needs to report an error.
  - If set to **SILENT**, the fixture does not light the display with error warnings but error messages can still be read when the display is activated manually.

  In both **NORMAL** and **SILENT** modes, the status LED lights amber to indicate a warning and red to indicate an error.

- **HIBERNATION MODE** sets light output intensity to zero and disables effect deployment and pan/tilt movement. The main purpose of this mode is to protect the fixture from the intake of airborne material such as dust and confetti and to provide an option for situations where noise is critical. The small reduction in power consumption obtained in Hibernation Mode is not the main purpose of this mode.

  When you bring the fixture out of hibernation mode, it performs a full reset.

- **SCENE CAPTURE** lets you capture all the DMX values that the fixture is currently receiving and save them as a scene with the **RECORD** command. If you enable **PLAYBACK**, the fixture will show that scene every time it is powered on or you carry out a reset.
  - If the fixture receives a DMX control signal during playback, it will immediately stop showing its saved scene. If the fixture is powered off and on again or if the fixture is reset, it will again show its saved scene.
  - To stop the fixture showing its saved scene at each power cycle or reset, set **PLAYBACK** to **DISABLE** in the **SCENE CAPTURE** menu or on the DMX Control / Settings channel.

- **AURA IN COMPACT MODE** lets you activate or deactivate the Aura filaments when you are controlling the fixture in Compact or Compact Direct DMX mode.

- **AUTO EMPTY WATER** automatically clears water from the lens when necessary:
  - When set to **ON**, the fixture will automatically detect if its head is pointing upwards and if it is raining. If these two conditions are present, the fixture will regularly dim its light output, tilt its head to empty any water buildup on top of the lens, tilt back to its normal position and restore its output.
  - When set to **OFF**, this functionality is disabled.

Managing fixture settings

Factory default settings

FACTORY DEFAULT lets you reload the fixture's factory default settings. Effect calibration settings are not affected, so any changes you have made to zoom, pan and tilt offsets will be kept.

Custom settings

The custom configuration function **CUSTOM 1** - **CUSTOM 3** allows you to save and recall up to three sets of fixture settings. These include all the settings in the **PERSONALITY** menu as well as the fixture's DMX address.

Fixture information readouts

The following fixture information can be called up in the display:

- **POWER ON TIME** provides two counters, one user-resettable, one non-resettable, that display the total number of hours the fixture has been powered on since manufacture.
- **POWER ON CYCLES** provides two counters, one user-resettable, one non-resettable, that display the total number of power on/off cycles since manufacture.
- **FIRMWARE VERSION** displays the currently installed firmware (fixture software) version.
- **RDM UID** displays the fixture's factory-set unique ID for identification in RDM systems.
- **FAN SPEEDS** provides separate status readouts from the fixture's cooling fans.

Temperatures

The **TEMPERATURES** menu provides separate temperature readouts for each of the fixture's PCBs. You can choose to see the current readout or the minimum and maximum temperature levels since the fixture was last powered on.

Wetness and base orientation

The **WET AND ORIENTATION** menu provides readouts for:

Wetness

- Longest time the fixture has been wet without any dry break
- If the fixture is wet, how long since the last time it was dry
- Total number of times the fixture has been wet for longer than 90 minutes
- Total amount of time the fixture has been wet in its lifetime
- Current value of rain sensor

Base orientation

- Orientation, X axis
- Orientation, Y axis
- Orientation, Z axis

The MAC Aura XIP has an internal system that detects the orientation of the base. The X, Y and Z axis readouts give an indication of the force due to gravity measured by the acceleration sensors in the base since the fixture was last powered on. The readouts from this system can be a useful addition to a visual check and can help service technicians check correct system functionality.

DMX signal monitoring

The MAC Aura XIP provides data on the DMX signal it is receiving in the **DMX LIVE** menu. This information can be useful for troubleshooting control problems.

- **RATE** displays the DMX refresh rate in packets per second. Values lower than 10 or higher than 44 may result in erratic performance, especially when using tracking control.
- **QUALITY** displays the quality of the received DMX data as a percentage of usable packets from the data received. Values much below 100 indicate interference, poor connections, or other problems with the serial data link that are the most common cause of control problems.
- **START CODE** displays the DMX start code. Packets with a start code other than 0 may cause irregular performance.

The **DMX LIVE** menu lets you scroll through all the fixture's DMX channels and display the DMX values from 0 - 255 that are being received on each channel.

Test sequences

The **FIXTURE TEST** menu lets you test:

- all the fixture's effects,
- LED operation,
- operation of each individual effect, or
- pan and tilt only.

Before you run a test, prepare for the head to move and the fixture to light up suddenly without warning.

To run a test:

- In the **FIXTURE TEST** menu, scroll to **TEST ALL**, **TEST LEDS**, **TEST EFFECTS** or **TEST PAN/TILT** and press ENTER.
- In the **TEST LEDS and TEST EFFECTS** menus, scroll to the LEDs or effect that you want to test and press ENTER to start a test sequence for that effect.
- In the **TEST PAN/TILT** menu, choose **PAN** or **TILT**, make sure that the fixture base is held securely and that there is no danger of the fixture falling over or head colliding, then press ENTER to start the test sequence.
- Press MENU to stop the test sequence.

Manual control

The **MANUAL CONTROL** menu lets you reset the fixture and operate it without a DMX controller.

To execute commands in the **MANUAL CONTROL** menu, select the effect that you want to control, then enter a value from 0 to 255 for 8-bit commands or 0 to 65536 for 16-bit commands in order to apply that command. The menu items and values available correspond to the commands listed in the DMX protocol in this User Manual.

When you exit the **MANUAL CONTROL** menu, the fixture will keep its effect positions and settings until you enter a new menu. When you do this, the fixture will revert to default positions and settings. The fixture will also revert to default positions and settings if you exit and then re-enter **MANUAL CONTROL**.

Service

Note: The MAC Aura XIP Safety and Installation Manual supplied with fixtures and attached to this User Manual gives details of cleaning the fixture and servicing the air filter.

The fixture's **SERVICE** menu provides utilities for technicians rigging or servicing the fixture (see "Control panel menus" on page 48 for full details of the control panel menus):

- **ERROR LIST** displays a list of any status messages stored in memory. Up to 20 messages can be displayed.
- **FAN CLEAN** lets you set cooling fans to run at high speed to remove loose dust.
- **P/T FEEDBACK** lets you disable feedback to the fixture software from the pan, tilt and effects positioning systems.
  - If feedback is set to **ON** and a pan, tilt or effect position error is detected, the shutter closes and the effect resets.
  - This feature can be disabled by setting feedback to **OFF**. The **OFF** setting is not saved when the fixture is powered off, and the system will be re-enabled the next time the fixture starts.
- **ADJUST** is for use by Martin Service only. **Important! Do not use the items in this menu without guidance or service documentation from Martin Service.**
- For details of the **CALIBRATION** menu, see next section.
- **EMPTY WATER** briefly dims the light output and tilts the head to dispose of any water that has built up in front of the lens.
- **DRY OFF** starts a drying procedure that uses heat, fans and movement to dry off the fixture. This feature can be useful before putting the fixture into a flightcase or storage, when the fixture must be completely dry to avoid any potential damage.
- **SAFE PARKING** moves the fixture head to a safe position where no water or snow can build up in front of the lens. In this mode, the fixture will also monitor ambient temperature levels and generate heat any time there is a risk of ice forming on the fixture.
- **USB** lets you update the firmware (fixture software) from a USB flash memory drive. For a detailed guide to updating the firmware from a USB drive, see "Installing using a USB memory device" later in this chapter.

Calibration

Martin fixtures are adjusted and calibrated at the factory, and further calibration should only be necessary if fixtures have been subjected to abnormal shocks during transport or if normal wear and tear has affected alignment after an extended period of use. You can also use calibration to fine-tune fixtures for a particular location or application.

The **SERVICE** → **CALIBRATION** menu lets you define offsets in the fixture software to adjust the positions of pan, tilt and effects relative to the DMX values the fixture receives. This allows you to fine-tune fixtures and achieve uniform behavior in multiple fixtures.

We recommend the following procedure:

1. Aim a reference fixture and the fixtures that you want to calibrate at a flat surface. You can calibrate fixtures one at a time or line up multiple fixtures in a row. Apply power and set pan, tilt and effects to the same DMX values.
2. In each fixture, scroll through the effects in the **SERVICE** → **CALIBRATION** menu and adjust the position of any effects that need calibration while comparing the light output with the reference fixture. The calibration range available varies depending on the effect.

3. After selecting a value, press ENTER to confirm. The fixture will remember any new calibration values that you have set, and the new positions will not be affected by powering the fixture off and on.

Loading and storing default calibration offsets

- **CALIBRATION** → **LOAD DEFAULTS** lets you erase any custom calibration offsets that you have defined and reload the default calibration offsets that are stored in memory.
- **CALIBRATION** → **SAVE DEFAULTS** lets you overwrite the factory default calibration offsets that are stored in memory with any new offsets that you have defined.

  Important! Overwriting is permanent. Once you have saved new default offsets, **LOAD DEFAULTS** will load the new defaults, not the original factory defaults. Once you have used a **CALIBRATION** → **SAVE DEFAULTS** command it will be impossible to restore the original factory defaults, even with a firmware upload.

Installing firmware

You can check the currently installed firmware (fixture software) version in the **INFORMATION** menu in the MAC Aura XIP's control panel.

Firmware updates are available from the Martin website and can be downloaded automatically from within the Martin Companion software suite on a PC connected to the Internet. You can install firmware updates using one of the following methods:

- A USB memory device inserted into the USB port beside the control panel.
- A Windows PC running the Martin Companion application with a Martin Companion Cable USB/DMX hardware interface connected to the DMX link.
- A Martin P3 system controller connected to the fixture via the Ethernet cable.

Calibration data is stored in the relevant modules wherever possible so that a module will stay calibrated if is removed from the fixture or installed in another fixture.

Important! Do not switch the fixture off or disconnect the source of the firmware during an update, or the firmware will be corrupted.

Installing using a USB memory device

The following are required in order to install firmware using a USB memory device:

- The MAC Aura XIP '.BANK' firmware update file, available for automatic download from within the Martin Companion software suite running on a PC connected to the Internet.
- A USB memory stick or other USB memory device with the update file copied from a PC into the USB stick's root directory.

To install the MAC Aura XIP firmware:

1. Download the '.BANK' firmware file from within the Martin Companion Application and press **Download USB Stick Firmware...**
2. Read the firmware release notes carefully to check for any instructions or warnings, and copy the firmware file to the root directory of a USB stick.
3. Disconnect the data link from the MAC Aura XIP.
4. Insert the USB stick into the MAC Aura XIP's USB host socket. The fixture should recognize the USB stick and illuminate the display. If the fixture does not recognize the USB stick, navigate to **SERVICE** → **USB** in the control panel.
5. **AVAILABLE FIRMWARE** will appear in the display. You can now scroll through the firmware versions available.
6. To install a firmware version, select it and press Enter. The MAC Aura XIP asks you to confirm installation of the new firmware. Press Enter to confirm and press Menu to exit without confirming.
7. Allow the fixture to install the firmware and reboot. Do not remove the USB stick until the fixture has successfully rebooted.
8. Remove the USB stick. The newly-installed firmware version will now be displayed in the **INFORMATION** menu.
9. Reconnect the data link.

10. If you have installed a new firmware version, check the MAC Aura XIP area of www.martin.com to see whether an updated version of this User Manual is available for the new firmware.

Fixture information and settings are not affected when you upload new firmware to the fixture.

Installing using a PC running Martin Companion

The following are required in order to install firmware using a PC:

- A Windows PC running the latest version of the Martin Companion software suite (available for download free of charge from the Martin website at www.martin.com).
- The MAC Aura XIP firmware file, which the Martin Companion application will download automatically when you run Martin Companion on a PC with an Internet connection.
- The Martin Companion Cable USB-DMX hardware interface, available from your Martin supplier by ordering P/N 91616091.

To install the MAC Aura XIP firmware:

1. Connect your PC to the Internet and launch the Martin Companion application. The application will automatically download the latest Martin fixture firmware from the Martin cloud.
2. Read the firmware release notes carefully to check for any instructions or warnings.
3. Connect the Martin Companion Cable hardware interface to your PC and to the DMX link. Any fixtures on the DMX link that are powered on will automatically recognize that Martin Companion has been connected.
4. Carry out a firmware upload from within the Martin Companion application (see the application's help files if necessary). Do not disconnect the Martin Companion cable until the upload is complete.

Installing from a P3 controller

To install firmware in the MAC Aura XIP from a Martin P3 controller, you must first download the latest MAC Aura XIP firmware file automatically from the Martin cloud using the Martin Companion application running on a PC connected to the Internet. You must then import the firmware into the P3 controller. Once imported, you can use the P3 controller to upload the firmware to all the fixtures on the network that are powered on.

When you import new firmware into a P3 controller, it will automatically recognize old firmware in fixtures and suggest a firmware update.

When carrying out firmware updates, the P3 controller must be connected to fixtures via Ethernet cable as normal. Updating the firmware is a fairly intuitive process using the commands available in the controller interface. Any fixtures that are powered on will recognize that the P3 controller is offering a firmware update and prepare to receive the firmware.

Adjusting settings via DMX

Certain fixture settings and parameters can be adjusted from the DMX controller on Channel 19, the Fixture Control/Settings channel. Commands sent on this channel override any settings entered in the fixture's onboard control menus.

To help you avoid accidentally applying a setting that may disrupt a light show, for example, the commands must be held for a certain time before they are applied. For example, the command that turns off the display illumination must be held for one second to activate it. The command that resets the fixture must be held for five seconds to activate it. The DMX protocol table in this user manual gives details of times required.

Resetting

Either the entire fixture or individual effects can be reset to their initial positions. Resetting individual effects can allow on-the-fly recovery if an effect loses its correct position, for example, without having to reset the entire fixture.

Illuminating the display

You can set the fixture's display panel to ON or OFF with a DMX command. This makes it possible to read the fixture's DMX address while the fixture is installed in the rig but black out the display panel during a show.

If the display is set to ON via DMX, it will enter sleep mode and black out after a short period of inactivity. To bring it out of sleep mode, set the display to ON again via DMX.

Control menu setting overrides

The following fixture settings can be adjusted via DMX, overriding the settings entered in the onboard control menus. See under "DMX protocol" on page 28 for details of these settings.

- Dimming curve
- Pan and tilt speed
- Video tracking
- Color mode
- Control panel display on/sleep mode
- Fan speed
- Hibernation mode
- Pan/tilt range limits
- Tungsten emulation
- Scene record and playback
- Compact Mode Aura
- Auto Empty Water
- Empty Head
- Dry Off
- Safe Parking

It is also possible to adjust calibration offsets via DMX. This feature can be useful if you want to fine-tune pan, tilt or other effects after fixtures have been installed in a lighting rig, for example.

Adjusting calibration offsets via DMX

You can adjust the home positions of pan, tilt and all the fixture's effects remotely via DMX by setting custom calibration offsets on the Control/Settings DMX channel.

To set a custom offset in the position of an effect:

1. Set the effect to a specific value via DMX (for example, set all the fixtures in a group to DMX value 200 on the zoom channel).
2. Select 'Enable calibration adjustment' on the Control/Settings channel and hold for 5 seconds to activate.
3. The fixture now registers the current positions of all effects and holds them there. To select an effect to adjust, you must first release it from its hold position by changing the value on its DMX channel by +/- 10%. The effect then returns to its hold position. The effect's DMX channel now represents the full calibration range. The range can vary but is typically +/- 5-10%. In this case you can adjust the effect's position using that effect's DMX channel (8 or 16 bit) as follows:
   - DMX value 0 = -5%
   - DMX value 127/32767 = 0%
   - DMX value 255/65535 = +5%.
4. Adjust the effect until it is in the required position (for example, adjust the zoom angle on each fixture in the group until the angle on all fixtures is identical – this is the position that you will obtain when you send DMX value 200).
5. Send a 'Store XXX calibration' command on the Control/Settings channel for each effect that you adjust and hold that command for 5 seconds to activate. The new calibration offset is now stored in memory.
6. When you have finished adjusting calibration offsets, send value 0 on the Control/Settings channel and hold for 5 seconds to exit the DMX calibration procedure and return to normal DMX control.

Calibration offsets that are stored in memory are not affected by powering the fixture off and on or by updating the fixture software.

Restoring default calibration offsets

If you want to delete all custom calibration offsets and return the offsets to their default values:

1. On the Control/Settings DMX channel, send a 'Return all calibration settings to factory defaults' command and hold for 5 seconds.
2. The fixture will return all effects to their default calibration values.

Note that, If you have overwritten the factory default values by applying a SERVICE → CALIBRATION → SAVE DEFAULTS command in the fixture's onboard control panel, the fixture will return to the calibration values that were saved as the default values at that time. The SAVE DEFAULTS command in the fixture's control panel permanently replaces the factory default calibration settings with the current custom calibration settings.

DMX protocol

Compact Mode

MAC Aura XIP firmware version 1.3.0.

Channel	DMX Value	Function	Fade type	Default value
Strobe / Intensity				
1	0 - 19 20 - 49 50 - 200 201 - 210 211 - 255	**Strobe/shutter effect** Shutter closed Shutter open Strobe, slow → fast Shutter open Random strobe, slow → fast	Snap	30
2 **3**	0 - 65535	**Dimmer (16-bit)** Closed → open	Fade	0
Color (all 7 Beam pixels plus Aura controlled as single pixel)				
4 **5**	0 - 65535	**Red (16-bit)** 0 → 100%	Fade	65535
6 **7**	0 - 65535	**Green (16-bit)** 0 → 100%	Fade	65535
8 **9**	0 - 65535	**Blue (16-bit)** 0 → 100%	Fade	65535
10	0 - 18 19 ... 127 128 129 ... 255	**CTC – 1000 K to 12 850 K in 50 K steps** 1000 K 1050 K ... 6450 K 6500 K 6550 K ... 12 850 K	Fade	128
11	0 - 126 127 - 128 129 - 255	**Green-Magenta Shift (Tint)** Shift towards magenta / negative Duv (0 is maximum offset from black body curve) No shift (on black body curve) Shift towards green / positive Duv (255 is maximum offset from black body curve)	Fade	128
12	0 -10 11 13 15 17 19 21 23 25 27 29 31 33 35 37 39 41 43	**Virtual color wheel** **Indexing, solid colors** Open Moroccan pink (Lee 790) Pink (Lee 157) Special rose pink (Lee 332) Follies pink (Lee 328) Fuchsia pink (Lee 345) Surprise pink (Lee 194) Congo blue (Lee 181) Tokyo blue (Lee 071) Deep blue (Lee 120) Just blue (Lee 079) Medium blue (Lee 132) Double CT blue (Lee 200) Slate blue (Lee 161) Full CT blue (Lee 201) Half CT blue (Lee 202) Steel blue (Lee 117) Lighter blue (Lee 353)	Snap	0

Table 2: MAC Aura XIP Compact Mode DMX Protocol

Channel	DMX Value	Function	Fade type	Default value
12 cont.	45	Light blue (Lee 118)	Snap	0
	47	Medium blue green (Lee 116)		
	49	Dark green (Lee 124)		
	51	Primary green (Lee 139)		
	53	Moss green (Lee 089)		
	55	Fern green (Lee 122)		
	57	Jas green (Lee 738)		
	59	Lime green (Lee 088)		
	61	Spring yellow (Lee 100)		
	63	Deep amber (Lee 104)		
	65	Chrome orange (Lee 179)		
	67	Orange (Lee 105)		
	69	Gold amber (Lee 021)		
	71	Millennium gold (Lee 778)		
	73	Deep golden amber (Lee 135)		
	75	Flame red (Lee 164)		
	77	Red magenta		
	79	Medium lavender		
	81	Pure white		
	83	Pure red		
	85	Pure yellow		
	87	Pure green		
	89	Pure cyan		
	91	Pure blue		
	93	Pure magenta		
	95	Peacock blue (LEE 115)		
	97	Dark lavender (LEE 180)		
	99	Double CT orange (LEE 287)		
	101	Full CT orange (LEE 204)		
	103	Half CT orange (LEE 205)		
	105	Deep Straw (LEE 015)		
	107- 190	*No function*		
		Continuous rotation		
	191 - 214	CW, fast → slow		
	215 - 219	Stop (wheel stops at current position)		
	220 - 243	CCW slow → fast		
		Random colors		
	244 - 247	Fast		
	248 - 251	Medium		
	252 - 255	Slow		
Zoom				
13	0 - 65535	**Zoom (16-bit)**	Fade	32768
14		Narrow → wide		
Movement				
15	0 - 65535	**Pan (16-bit)**	Fade	32768
16		Left → right		
17	0 - 65535	**Tilt (16-bit)**	Fade	32768
18		Forward → backward		
Control / Settings				
19		**Fixture control/settings**	Snap	0
		(hold for number of seconds indicated to activate)		
	0 - 9	Exit calibration adjustment and return to normal control – 5 sec.		
	10 - 14	Reset entire fixture – 5 sec.		
	15 - 16	*No function*		
	17	Reset beam only – 5 sec.		
	18	Reset pan and tilt only – 5 sec.		
	19 - 22	*No function*		
	23	Linear dimming curve – 1 sec. (menu override, setting unaffected by power off/on)		
	24	Square law dimming curve – 1 sec. (menu override, default setting, setting unaffected by power off/on)		
	25	Inverse square law dimming curve – 1 sec. (menu override, setting unaffected by power off/on)		
	26	S-curve dimming curve – 1 sec. (menu override, setting unaffected by power off/on)		

Table 2: MAC Aura XIP Compact Mode DMX Protocol

Channel	DMX Value	Function	Fade type	Default value
19 cont.	27	*No function*	Snap	0
	28	Fast pan and tilt speed (default setting) – 1 sec. (menu override - setting returns to *Fast pan and tilt speed* after power on/off)		
	29	Smooth pan and tilt speed – 1 sec. (menu override - setting returns to *Fast pan and tilt speed* after power on/off)		
	30 - 35	*No function*		
	36	Video tracking = ON – 1 sec.		
	37	Video tracking = OFF (default setting) – 1 sec.		
	38	Extended color mode (default setting) – 1 sec.		
	39	Calibrated color mode – 1 sec.		
	40 - 51	*No function*		
	52	Control panel display = ON (default setting) – 1 sec.		
	53	Control panel display = OFF – 1 sec.		
	54	Regulated fan speed, fixed light output intensity (default setting) – 1 sec.		
	55	Full fan speed, regulated light output intensity – 1 sec.		
	56	Medium fan speed, regulated light output intensity – 1 sec.		
	57	Low fan speed, regulated light output intensity – 1 sec.		
	58	Ultra-low fan speed, regulated light output intensity – 1 sec.		
	59 - 60	*No function*		
	61	Hibernation mode = ON – 1 sec.		
	62	Hibernation mode = OFF (default setting) – 1 sec.		
	63 - 64	*No function*		
	65	Pan and tilt limits on – 1 sec.		
	66	Pan and tilt limits off (default setting) – 1 sec.		
	67	Store lower pan limit – 1 sec.		
	68	Store upper pan limit – 1 sec.		
	69	Store lower tilt limit – 1 sec.		
	70	Store upper tilt limit – 1 sec.		
	71	Reset pan and tilt limits – 1 sec.		
	72	Tungsten emulation = ON – 1 sec.		
	73	Tungsten emulation = OFF (default setting) – 1 sec.		
	74	Scene capture record – 5 sec.		
	75	Scene capture playback = ON – 5 sec.		
	76	Scene capture playback = OFF (default setting) – 5 sec.		
	77 - 91	*No function*		
	92	Compact Mode Aura = ON – 1 sec.		
	93	Compact Mode Aura = OFF (default setting) – 1 sec.		
	94 - 99	*No function*		
	100	Enable calibration adjustment – 5 sec.		
	101	Store pan and tilt calibration – 5 sec.		
	102	Store dimmer calibration – 5 sec.		
	103 - 113	*No function*		
	114	Store zoom calibration – 5 sec.		
	115 - 198	*No function*		
	199	Return all calibration settings to factory defaults – 5 sec.		
	200 - 207	*No function*		
	208	Auto empty water = ON – 1 sec.		
	209	Auto empty water = OFF (default setting) – 1 sec.		
	210	Outdoor – Stop actions and return to normal operation (default setting) – 1 sec.		
	211	Outdoor – Empty head – 1 sec.		
	212	Outdoor – Dry off – 1 sec.		
	213	Outdoor – Go to safe parking position – 1 sec.		
	214-255	*No function*		
20		**LED frequency**	Snap	128
	0 - 127	Adjustment in steps from 2400 to 3000 Hz		
	128	Default PWM frequency (3000 Hz)		
	129 - 254	*No function*		
	255	High-speed PWM Frequency Mode (24 000 Hz)		

Table 2: MAC Aura XIP Compact Mode DMX Protocol

Basic Mode

MAC Aura XIP firmware version 1.3.0.

Channels 1 - 20: as in Compact Mode				
Beam P3 Mix				
21	0 - 26 27 28 - 227 228 229 - 255	**Beam P3 Mix** *DMX Mode* Intensity and colors fully controlled by DMX, P3 pixel data ignored *Mixed Mode* Output fully controlled by DMX (P3 pixel data ignored) Progressive crossfade from DMX to P3 control Output fully controlled by P3 (DMX data ignored) *Video Mode* P3 pixel control with DMX superimposed (DMX channels ‘color’ the P3 pixel data)	Snap	0
Pre-programmed FX				
22	0 1 - 255	**FX1 selection (see FX table on page 42)** No effect Effect selection (adjust speed and direction on channel 23)	Snap	0
23	0 - 126 127 - 129 130 - 255	**FX1 speed and direction** Effect reversed fast → slow Effect stops Effect forward slow → fast	Fade	128
24	0 1 - 255	**FX2 selection (see FX table on page 42)** No effect Effect selection (adjust speed and direction on channel 25)	Snap	0
25	0 - 126 127 - 129 130 - 255	**FX2 speed and direction** Effect reversed fast → slow Effect stops Effect forward slow → fast	Fade	128
26	0 1 2 3 4 5 6 7 8 9 10 11 12 13 14 15 16 17 18 19 20 21 22 23 24 25 26 27 28	**FX synchronization** No sync Offset shift 10° Offset shift 20° Offset shift 30° Offset shift 40° Offset shift 50° Offset shift 60° Offset shift 70° Offset shift 80° Offset shift 90° Offset shift 100° Offset shift 110° Offset shift 120° Offset shift 130° Offset shift 140° Offset shift 150° Offset shift 160° Offset shift 170° Offset shift 180° Offset shift 190° Offset shift 200° Offset shift 210° Offset shift 220° Offset shift 230° Offset shift 240° Offset shift 250° Offset shift 260° Offset shift 270° Offset shift 280°	Snap	36

26 cont.	29 30 31 32 33 34 35 36 37 - 100 101 - 120 121 - 140 141 - 255	Offset shift 290° Offset shift 300° Offset shift 310° Offset shift 320° Offset shift 330° Offset shift 340° Offset shift 350° Synchronized: all fixtures start FX cycles at same time *No function* Random start (Channel 23 controls overall speed) Random duration *No function*	Snap	36
Aura control				
27	0 - 19 20 - 49 50 - 200 201 - 210 211 - 255	**Aura strobe shutter** Shutter closed Shutter open Strobe slow → fast Shutter open Random strobe slow → fast	Snap	30
28 **29**	0 - 65535	**Aura dimmer (16-bit)** Intensity 0 - 100%	Fade	0
30	0 - 255	**Aura Red** 0 - 100%	Fade	255
31	0 - 255	**Aura Green** 0 - 100%	Fade	255
32	0 - 255	**Aura Blue** 0 - 100%	Fade	255
33	0 - 18 19 ... 127 128 129 ... 255	**Aura CTC – 1000 K to 12 850 K in 50 K steps** 1000 K 1050 K ... 6450 K 6500 K 6550 K ... 12 850 K	Fade	128
34	0 - 126 127 - 128 129 - 255	**Aura Green-Magenta shift (tint)** Shift towards Magenta / negative Duv (0 = max. offset from black body curve) No shift on black body curve Shift towards Green / positive Duv (255 = max. offset from black body curve)	Fade	128
35	0 -10 11 13 15 17 19 21 23 25 27 29 31 33 35 37	**Aura virtual color wheel** **Indexing, solid colors** Open Moroccan pink (Lee 790) Pink (Lee 157) Special rose pink (Lee 332) Follies pink (Lee 328) Fuchsia pink (Lee 345) Surprise pink (Lee 194) Congo blue (Lee 181) Tokyo blue (Lee 071) Deep blue (Lee 120) Just blue (Lee 079) Medium blue (Lee 132) Double CT blue (Lee 200) Slate blue (Lee 161) Full CT blue (Lee 201)	Snap	0

35 cont.	39 41 43 45 47 49 51 53 55 57 59 61 63 65 67 69 71 73 75 77 79 81 83 85 87 89 91 93 95 97 99 101 103 105 107 - 190 191 - 214 215 - 219 220 - 243 244 - 247 248 - 251 252 - 255	Half CT blue (Lee 202) Steel blue (Lee 117) Lighter blue (Lee 353) Light blue (Lee 118) Medium blue green (Lee 116) Dark green (Lee 124) Primary green (Lee 139) Moss green (Lee 089) Fern green (Lee 122) Jas green (Lee 738) Lime green (Lee 088) Spring yellow (Lee 100) Deep amber (Lee 104) Chrome orange (Lee 179) Orange (Lee 105) Gold amber (Lee 021) Millennium gold (Lee 778) Deep golden amber (Lee 135) Flame red (Lee 164) Red magenta Medium lavender Pure white Pure red Pure yellow Pure green Pure cyan Pure blue Pure magenta Peacock blue (LEE 115) Dark lavender (LEE 180) Double CT orange (LEE 287) Full CT orange (LEE 204) Half CT orange (LEE 205) Deep Straw (LEE 015) *No function* **Continuous rotation** CW, fast → slow Stop (wheel stops at current color) CCW slow → fast **Random colors** Fast Medium Slow	Snap	0
36	0 - 26 27 28 - 227 228 229 - 255	**Aura P3 Mix** *DMX Mode* Output fully controlled by DMX (P3 pixel data ignored) *Mixed Mode* Output fully controlled by DMX (P3 pixel data ignored) Progressive crossfade from DMX to P3 control Output fully controlled by P3 (DMX data ignored) *Video Mode* P3 pixel control with DMX superimposed (DMX channels ‘color’ the P3 pixel data)	Snap	0

Extended Mode

MAC Aura XIP firmware version 1.3.0.

See “Pixel mapping” on page 9 for details of Beam pixel numbering.

Channels 1 - 36: as in Basic Mode				
Beam Pixel color (Pixel Color Control of 7 x Beam LEDs, Global Beam RGB channels are added to this using HTP)				
37	0 - 255	**Pixel 1 Red** 0 - 100%	Fade	0
38	0 - 255	**Pixel 1 Green** 0 - 100%	Fade	0
39	0 - 255	**Pixel 1 Blue** 0 - 100%	Fade	0
40	0 - 255	**Pixel 2 Red** 0 - 100%	Fade	0
41	0 - 255	**Pixel 2 Green** 0 - 100%	Fade	0
42	0 - 255	**Pixel 2 Blue** 0 - 100%	Fade	0
43	0 - 255	**Pixel 3 Red** 0 - 100%	Fade	0
44	0 - 255	**Pixel 3 Green** 0 - 100%	Fade	0
45	0 - 255	**Pixel 3 Blue** 0 - 100%	Fade	0
46	0 - 255	**Pixel 4 Red** 0 - 100%	Fade	0
47	0 - 255	**Pixel 4 Green** 0 - 100%	Fade	0
48	0 - 255	**Pixel 4 Blue** 0 - 100%	Fade	0
49	0 - 255	**Pixel 5 Red** 0 - 100%	Fade	0
50	0 - 255	**Pixel 5 Green** 0 - 100%	Fade	0
51	0 - 255	**Pixel 5 Blue** 0 - 100%	Fade	0
52	0 - 255	**Pixel 6 Red** 0 - 100%	Fade	0
53	0 - 255	**Pixel 6 Green** 0 - 100%	Fade	0
54	0 - 255	**Pixel 6 Blue** 0 - 100%	Fade	0
55	0 - 255	**Pixel 7 Red** 0 - 100%	Fade	0
56	0 - 255	**Pixel 7 Green** 0 - 100%	Fade	0
57	0 - 255	**Pixel 7 Blue** 0 - 100%	Fade	0

Ludicrous Mode

MAC Aura XIP firmware version 1.3.0.

See “Pixel mapping” on page 9 for details of Aura filament numbering.

Channels 1 - 57: as in Extended Mode				
Aura Filament color (Filament Color Control of 12 x Aura LEDs, Global Aura RGB channels are added to this using HTP)				
58	0 - 255	**Filament 1 Red** 0 - 100%	Fade	0
59	0 - 255	**Filament 1 Green** 0 - 100%	Fade	0
60	0 - 255	**Filament 1 Blue** 0 - 100%	Fade	0
61	0 - 255	**Filament 2 Red** 0 - 100%	Fade	0
62	0 - 255	**Filament 2 Green** 0 - 100%	Fade	0
63	0 - 255	**Filament 2 Blue** 0 - 100%	Fade	0
64	0 - 255	**Filament 3 Red** 0 - 100%	Fade	0
65	0 - 255	**Filament 3 Green** 0 - 100%	Fade	0
66	0 - 255	**Filament 3 Blue** 0 - 100%	Fade	0
67	0 - 255	**Filament 4 Red** 0 - 100%	Fade	0
68	0 - 255	**Filament 4 Green** 0 - 100%	Fade	0
69	0 - 255	**Filament 4 Blue** 0 - 100%	Fade	0
70	0 - 255	**Filament 5 Red** 0 - 100%	Fade	0
71	0 - 255	**Filament 5 Green** 0 - 100%	Fade	0
72	0 - 255	**Filament 5 Blue** 0 - 100%	Fade	0
73	0 - 255	**Filament 6 Red** 0 - 100%	Fade	0
74	0 - 255	**Filament 6 Green** 0 - 100%	Fade	0
75	0 - 255	**Filament 6 Blue** 0 - 100%	Fade	0
76	0 - 255	**Filament 7 Red** 0 - 100%	Fade	0
77	0 - 255	**Filament 7 Green** 0 - 100%	Fade	0
78	0 - 255	**Filament 7 Blue** 0 - 100%	Fade	0
79	0 - 255	**Filament 8 Red** 0 - 100%	Fade	0
80	0 - 255	**Filament 8 Green** 0 - 100%	Fade	0
81	0 - 255	**Filament 8 Blue** 0 - 100%	Fade	0
82	0 - 255	**Filament 9 Red** 0 - 100%	Fade	0
83	0 - 255	**Filament 9 Green** 0 - 100%	Fade	0
84	0 - 255	**Filament 9 Blue** 0 - 100%	Fade	0
85	0 - 255	**Filament 10 Red** 0 - 100%	Fade	0

86	0 - 255	**Filament 10 Green** 0 - 100%	Fade	0
87	0 - 255	**Filament 10 Blue** 0 - 100%	Fade	0
88	0 - 255	**Filament 11 Red** 0 - 100%	Fade	0
89	0 - 255	**Filament 11 Green** 0 - 100%	Fade	0
90	0 - 255	**Filament 11 Blue** 0 - 100%	Fade	0
91	0 - 255	**Filament 12 Red** 0 - 100%	Fade	0
92	0 - 255	**Filament 12 Green** 0 - 100%	Fade	0
93	0 - 255	**Filament 12 Blue** 0 - 100%	Fade	0

Compact Direct Mode

MAC Aura XIP firmware version 1.3.0.

Channel	DMX Value	Function	Fade type	Default value
Strobe / Intensity				
1	0 - 19 20 - 49 50 - 200 201 - 210 211 - 255	**Strobe/shutter effect** Shutter closed Shutter open Strobe, slow → fast Shutter open Random strobe, slow → fast	Snap	30
2 **3**	0 - 65535	**Dimmer (16-bit)** Closed → open	Fade	0
Color (all 7 Beam pixels plus Aura controlled as single pixel)				
4 **5**	0 - 65535	**Red (16-bit)** 0 → 100%	Fade	65535
6 **7**	0 - 65535	**Green (16-bit)** 0 → 100%	Fade	65535
8 **9**	0 - 65535	**Blue (16-bit)** 0 → 100%	Fade	65535
10 **11**	0 - 65535	**White (16-bit)** 0 → 100%	Fade	65535
12	...	**No function**	...	...
Zoom				
13 **14**	0 - 65535	**Zoom (16-bit)** Narrow → wide	Fade	32768
Movement				
15 **16**	0 - 65535	**Pan (16-bit)** Left → right	Fade	32768
17 **18**	0 - 65535	**Tilt (16-bit)** Forward → backward	Fade	32768
Control / Settings				
19	0 - 9 10 - 14 15 - 16 17 18 19 - 22 23 24 25 26	**Fixture control/settings** *(hold for number of seconds indicated to activate)* Exit calibration adjustment and return to normal control – 5 sec. Reset entire fixture – 5 sec. *No function* Reset beam only – 5 sec. Reset pan and tilt only – 5 sec. *No function* Linear dimming curve – 1 sec. (menu override, setting unaffected by power off/on) Square law dimming curve – 1 sec. (menu override, default setting, setting unaffected by power off/on) Inverse square law dimming curve – 1 sec. (menu override, setting unaffected by power off/on) S-curve dimming curve – 1 sec. (menu override, setting unaffected by power off/on)	Snap	0

Table 3: MAC Aura XIP Compact Direct Mode DMX Protocol

Channel	DMX Value	Function	Fade type	Default value
19 cont.	27	*No function*	Snap	0
	28	Fast pan and tilt speed (default setting) – 1 sec. (menu override - setting returns to *Fast pan and tilt speed* after power on/off)		
	29	Smooth pan and tilt speed – 1 sec. (menu override - setting returns to *Fast pan and tilt speed* after power on/off)		
	30 - 35	*No function*		
	36	Video tracking = ON – 1 sec.		
	37	Video tracking = OFF (default setting) – 1 sec.		
	38	Extended color mode (default setting) – 1 sec.		
	39	Calibrated color mode – 1 sec.		
	40 - 51	*No function*		
	52	Control panel display = ON (default setting) – 1 sec.		
	53	Control panel display = OFF – 1 sec.		
	54	Regulated fan speed, fixed light output intensity (default setting) – 1 sec.		
	55	Full fan speed, regulated light output intensity – 1 sec.		
	56	Medium fan speed, regulated light output intensity – 1 sec.		
	57	Low fan speed, regulated light output intensity – 1 sec.		
	58	Ultra-low fan speed, regulated light output intensity – 1 sec.		
	59 - 60	*No function*		
	61	Hibernation mode = ON – 1 sec.		
	62	Hibernation mode = OFF (default setting) – 1 sec.		
	63 - 64	*No function*		
	65	Pan and tilt limits on – 1 sec.		
	66	Pan and tilt limits off (default setting) – 1 sec.		
	67	Store lower pan limit – 1 sec.		
	68	Store upper pan limit – 1 sec.		
	69	Store lower tilt limit – 1 sec.		
	70	Store upper tilt limit – 1 sec.		
	71	Reset pan and tilt limits – 1 sec.		
	72	Tungsten emulation = ON – 1 sec.		
	73	Tungsten emulation = OFF (default setting) – 1 sec.		
	74	Scene capture record – 5 sec.		
	75	Scene capture playback = ON – 5 sec.		
	76	Scene capture playback = OFF (default setting) – 5 sec.		
	77 - 91	*No function*		
	92	Compact Mode Aura = ON – 1 sec.		
	93	Compact Mode Aura = OFF (default setting) – 1 sec.		
	94 - 99	*No function*		
	100	Enable calibration adjustment – 5 sec.		
	101	Store pan and tilt calibration – 5 sec.		
	102	Store dimmer calibration – 5 sec.		
	103 - 113	*No function*		
	114	Store zoom calibration – 5 sec.		
	115 - 198	*No function*		
	199	Return all calibration settings to factory defaults – 5 sec.		
	200 - 207	*No function*		
	208	Auto empty water = ON – 1 sec.		
	209	Auto empty water = OFF (default setting) – 1 sec.		
	210	Outdoor – Stop actions and return to normal operation (default setting) – 1 sec.		
	211	Outdoor – Empty head – 1 sec.		
	212	Outdoor – Dry off – 1 sec.		
	213	Outdoor – Go to safe parking position – 1 sec.		
	214-255	*No function*		
20		**LED frequency**	Snap	128
	0 - 127	Adjustment in steps from 2400 to 3000 Hz		
	128	Default PWM frequency (3000 Hz)		
	129 - 254	*No function*		
	255	High-speed PWM Frequency Mode (24 000 Hz)		

Table 3: MAC Aura XIP Compact Direct Mode DMX Protocol

XB Standard Mode

This DMX mode is available from MAC Aura XIP firmware version 1.2.0 onwards.

Please see Standard DMX Mode in the MAC Aura XB User Manual (available for download from the Martin website at www.martin.com) for this DMX protocol.

XB Extended Mode

This DMX mode is available from MAC Aura XIP firmware version 1.2.0 onwards.

Please see Extended DMX Mode in the MAC Aura XB User Manual (available for download from the Martin website at www.martin.com) for this DMX protocol.

FX: pre-programmed effects

The table on the following pages lists the pre-programmed dynamic FX (effect macros) available in the MAC Aura XIP. To control the FX you can:

- Select an effect (or two effects that can run simultaneously) by sending the values listed in the table.
- Adjust effect speed on channels 23 and 25.
- Adjust synchronization of effects across different fixtures on channel 26.

FX and DMX modes

Note that:

- The FX described below are available in Basic, Extended and Ludicrous modes.
- The FX are not available in Compact, Compact Direct and XB Standard modes.
- In XB Extended mode, the MAC Aura XIP offers the FX as described in the MAC Aura XB user manual.

Effects types

Beam intensity FX (1-13)

These FX modulate the intensity of all the Beam LEDs together while maintaining the color(s) set by the RGB channels, RGB pixel channels and P3 pixels.

The color selected on the Beam virtual color wheel is used as background color.

- For example, when the Beam virtual color wheel is set to 0 (open), the **Beam 2x Strobe** FX will strobe normal color on a black background.
- For example, when the Beam virtual color wheel is set to Green, the **Beam 2x Strobe** FX will strobe normal color on a green background.

Beam pixel FX (17-68)

These FX use individual Beam pixels for animated effects while maintaining the color(s) set by the RGB channels, RGB pixel channels and P3 pixels.

Also for these effects the Beam Virtual Color Wheel can be used to select a background color.

Beam color FX (72-98)

These FX override the Beam color(s) set by the RGB channels, RGB pixel channels, virtual color wheel and P3 pixels.

Beam color modifier FX (102-110)

These FX shift the color(s) set by the RGB channels, RGB pixel channels, virtual color wheel and P3 pixels.

Beam Time FX (114)

The **Beam Video Slo-Mo** FX sets the output of Beam pixels to the average of the last xxx video frames (DMX or P3), to create a slow-motion effect. The FX Speed channel defines xxx, i.e. the number of frames used when calculating this average.

Aura intensity FX (118-130)

These FX modulate the intensity of all the Aura filaments together while maintaining the color(s) set by the RGB channels, RGB pixel channels and P3 pixels.

The color selected on the Aura virtual color wheel is used as background color.

- For example, when the Aura virtual color wheel is set to 0 (open), the **Beam 2x Strobe** FX will strobe normal color on a black background.
- For example, when the Aura virtual color wheel is set to Green, the **Beam 2x Strobe** FX will strobe normal color on a green background.

Aura pixel FX (134-192)

These FX use individual Aura filaments for animated effects while maintaining the color(s) set by the RGB channels, RGB pixel channels and P3 pixels.

Also for these effects the Aura virtual color wheel can be used to select a background color.

Aura color FX (196-222)

These FX override the Aura color(s) set by the RGB channels, RGB pixel channels, virtual color wheel and P3 pixels.

Aura color modifier FX (226-236)

These FX shift the color(s) set by the RGB channels, RGB pixel channels, virtual color wheel and P3 pixels.

Aura Time FX (240)

The **Aura Video Slo-Mo** FX sets the output of Aura filaments to the average of the last xxx video frames (DMX or P3), to create a slow-motion effect. The FX Speed channel defines xxx, i.e. the number of frames used when calculating this average.

Beam & Aura combined FX (244-251)

These FX operate both the Beam and the Aura LEDs alternately or together, running effects over the entire fixture.

Dimming curve (255)

This FX applies a dimmer curve to virtual dimmers used on a lighting console.

Effects details

Available in MAC Aura XIP firmware version 1.4.x and higher.

DMX value	Effect	
0	No FX	
Beam Intensity All		
1	Beam Strobe Pulse Width	Modifies pulse width of strobe patterns selected via the Beam strobe/shutter channel
2	Beam blackout Strobe	Flashes of Beam going dark
3	Beam 2 x Strobe	Bursts of two strobe flashes
4	Beam 3 x Strobe	Bursts of three strobe flashes
5	Beam 4 x Strobe	Bursts of four strobe flashes
6	Beam Up, Down, Flash	Fading up, fading down and then flashing
7	Beam Up, Down, Flash (second color)	Fading up, fading down and then flashing in second color selected via Beam virtual color wheel
8	Beam Up, Flash, Down, Flash	Fading up, flashing, fading down and then flashing again
9	Beam Up, Flash, Down, Flash (second color)	Fading up, flashing, fading down and then flashing again in second color selected via Beam virtual color wheel
10	Beam Random Levels	Random intensity levels
11	Beam Movie Flicker	Mimic old movie flicker
12	Beam Atomic Lighting	Mimic lightning
13	Beam Thunderstorm	Mimic thunderstorm
14-16	*No function*	
Beam Intensity Pixels		
17	Beam Pixel Masks Static	Library of static pixel patterns which can be selected via the FX Speed channel
18	Beam Pixel Killer Static	Pixels turning on/off one by one when fading the FX Speed channel
19	Beam Sparkle Stars	Sparkling effect
20	Beam Starfield	Mimic spinning starfield
21	Beam Fiber Optic	Mimic fiber optic effect
22	Beam Noise	Overlays noise
23	Beam Build Up / Step Down	Pixels turning on/off in order without crossfade
24	Beam Build Up / Fade Down	Pixels turning on/off in order with crossfade
25	Beam Build Up / Random Step Down	Pixels turning on/off in random order without crossfade
26	Beam Build Up / Random Fade Down	Pixels turning on/off in random order with crossfade
27	Beam Random 1 Pixel Step	Random 1 pixel chase without crossfade
28	Beam Random 1 Pixel Fade	Random 1 pixel chase with crossfade
29	Beam Random 2 Pixel Step	Random 2 pixel chase without crossfade
30	Beam Random 2 Pixel Fade	Random 2 pixel chase with crossfade
31	Beam Random 3 Pixel Step	Random 3 pixel chase without crossfade
32	Beam Random 3 Pixel Fade	Random 3 pixel chase with crossfade
33	Beam Random 4 Pixel Step	Random 4 pixel chase without crossfade
34	Beam Random 4 Pixel Fade	Random 4 pixel chase with crossfade
35	Beam Split Static	Half-half split Beam which can be indexed
36	Beam Split Rotating Step	Half-half split Beam which rotates without crossfade
37	Beam Split Rotating Fade	Half-half split Beam which rotates with crossfade
38	Beam In/Out Step	Chase between inner pixel and outer pixels without crossfade
39	Beam In/Out Fade	Chase between inner pixel and outer pixels with crossfade
40	Beam Waterdrop	Mimic water drop
41	Beam Radar Spin Step	Radar line spinning without crossfade
42	Beam Radar Spin Fade	Radar line spinning with crossfade
43	Beam Line Spin Step	Diagonal line spinning without crossfade

Table 4: FX in the MAC Aura XIP

44	Beam Line Spin Fade	Diagonal line spinning with crossfade
45	Beam Cross (Y) Spin Step	Cross pattern spinning without crossfade
46	Beam Cross (Y) Spin Fade	Cross pattern spinning with crossfade
47	Beam Cross (Y) Circle (O) Step	Chase between cross pattern and circle pattern without crossfade
48	Beam Cross (Y) Circle (O) Fade	Chase between cross pattern and circle pattern with crossfade
49	Beam Slice Pie Spin Step	Slice of pie spinning without crossfade
50	Beam Slice Pie Spin Fade	Slice of pie spinning with crossfade
51	Beam Snake 1 Pixel Step	Snake of 1 pixel spinning around without crossfade
52	Beam Snake 1 Pixel Fade	Snake of 1 pixel spinning around with crossfade
53	Beam Snake 2 Pixel Step	Snake of 2 pixels spinning around without crossfade
54	Beam Snake 2 Pixel Fade	Snake of 2 pixels spinning around with crossfade
55	Beam Snake 3 Pixel Step	Snake of 3 pixels spinning around without crossfade
56	Beam Snake 3 Pixel Fade	Snake of 3 pixels spinning around with crossfade
57	Beam Snake 4 Pixel Step	Snake of 4 pixels spinning around without crossfade
58	Beam Snake 4 Pixel Fade	Snake of 4 pixels spinning around with crossfade
59	Beam Vertical Line Step	Vertical line chase without crossfade
60	Beam Vertical Line Fade	Vertical line chase with crossfade
61	Beam Vertical Line Bounce Step	Vertical line bounce without crossfade
62	Beam Vertical Line Bounce Fade	Vertical line bounce with crossfade
63	Beam Horizontal Line Step	Horizontal line chase without crossfade
64	Beam Horizontal Line Fade	Horizontal line chase with crossfade
65	Beam Horizontal Line Bounce Step	Horizontal line bounce without crossfade
66	Beam Horizontal Line Bounce Fade	Horizontal line bounce with crossfade
67	Beam Vertical + Horizontal Line Bounce Step	Vertical and horizontal line bounce without crossfade
68	Beam Vertical + Horizontal Line Bounce Fade	Vertical and horizontal line bounce with crossfade
69-71	*No function*	
Beam Color FX		
72	Beam Color Looks Static	Library of static colored pixel patterns which can be selected via the FX speed channel
73	Beam Rainbow Pixels Step	Rainbow pattern without crossfade
74	Beam Rainbow Pixels Fade	Rainbow pattern with crossfade
75	Beam Red-Yellow Pixels Step	Variations in red-yellow tint without crossfade
76	Beam Red-Yellow Pixels Fade	Variations in red-yellow tint with crossfade
77	Beam Yellow-Green Pixels Step	Variations in yellow-green tint without crossfade
78	Beam Yellow-Green Pixels Fade	Variations in yellow-green tint with crossfade
79	Beam Green-Cyan Pixels Step	Variations in green-cyan tint without crossfade
80	Beam Green-Cyan Pixels Fade	Variations in green-cyan tint with crossfade
81	Beam Cyan-Blue Pixels Step	Variations in cyan-blue tint without crossfade
82	Beam Cyan-Blue Pixels Fade	Variations in cyan-blue tint with crossfade
83	Beam Blue-Magenta Pixels Step	Variations in blue-magenta tint without crossfade
84	Beam Blue-Magenta Pixels Fade	Variations in blue-magenta tint with crossfade
85	Beam Magenta-Red Pixels Step	Variations in magenta-red tint without crossfade
86	Beam Magenta-Red Pixels Fade	Variations in magenta-red tint with crossfade
87	Beam Red-White-Blue Step	Red-white-blue bump without crossfade
88	Beam Red-White-Blue Fade	Red-white-blue bump with crossfade
89	Beam Fire	Mimic fire
90	Beam Water	Mimic water
91	Beam Swimming Pool	Mimic swimming pool
92	Beam Ice	Mimic ice
93	Beam Hot and Cold	Hot and cold colors
94	Beam Warm and Fuzzy	Warm and fuzzy colors
95	Beam Silver and Gold	Strobe of silver with hit of gold
96	Beam Gold and Silver	Strobe of gold with hit of silver

Table 4: FX in the MAC Aura XIP

97	Beam Electric Arc	Mimic electric arc
98	Beam Plasma	Mimic plasma
99-101	*No function*	
Beam Spectrum Shifter FX		
102	Beam Spectrum Shifter Static	Shift color spectrum with FX speed channel controlling the offset versus the starting color
103	Beam Spectrum Shifter Step	Step through offset colors with FX speed channel controlling the maximum offset versus the starting color
104	Beam Spectrum Shifter Fade	Fade through offset colors with FX speed channel controlling the maximum offset versus the starting color
105	Beam Pixel Spectrum Shifter Static	Offset pixel colors with FX speed channel controlling the maximum offset versus the starting color
106	Beam Pixel Spectrum Shifter Step	Step pixels through offset colors with FX speed channel controlling the maximum offset versus the starting color
107	Beam Pixel Spectrum Shifter Fade	Fade pixels through offset colors with FX speed channel controlling the maximum offset versus the starting color
108	Beam Pixel Spectrum Shifter Random Static	Random offset pixel colors with FX speed channel controlling the maximum offset versus the starting color
109	Beam Pixel Spectrum Shifter Random Step	Random step pixels through offset colors with FX speed channel controlling the maximum offset versus the starting color
110	Beam Pixel Spectrum Shifter Random Fade	Random fade pixels through offset colors with FX speed channel controlling the maximum offset versus the starting color
111-113	*No function*	
Beam Time		
114	Beam Video Slo-Mo	Average input from last frames controlled by FX speed channel to create slow-motion effect
115-117	*No function*	
Aura Intensity all		
118	Aura Strobe Pulse Width	Modifies pulse width of strobe patterns selected via the Aura strobe/shutter channel
119	Aura Blackout Strobe	Flashes of Aura going dark
120	Aura 2 x Strobe	Bursts of two strobe flashes
121	Aura 3 x Strobe	Bursts of three strobe flashes
122	Aura 4 x Strobe	Bursts of four strobe flashes
123	Aura Up, Down, Flash	Fading up, fading down and then flashing
124	Aura Up, Down, Flash (second color)	Fading up, fading down and then flashing in second color selected via Aura virtual color wheel
125	Aura Up, Flash, Down, Flash	Fading up, flashing, fading down and then flashing again
126	Aura Up, Flash, Down, Flash (second color)	Fading up, flashing, fading down and then flashing again in second color selected via Aura virtual color wheel
127	Aura Random Levels	Random intensity levels
128	Aura Movie Flicker	Mimic old movie flicker
129	Aura Atomic Lighting	Mimic lightning
130	Aura Thunderstorm	Mimic thunderstorm
131-133	*No function*	
Aura Intensity Pixels		
134	Aura Pixel Masks Static	Library of static pixel patterns which can be selected via the FX speed channel
135	Aura Pixel Killer Static	Filaments turning on/off one by one when fading the FX speed channel
136	Aura Sparkle Stars	Sparkling effect
137	Aura Lightning Flashes Random	Random lightning flashes
138	Aura Lightning Flashes Heavy	Random lightning flashes heavy
139	Aura Lightning Flashes Left-Right	Horizontal lightning flashes
140	Aura Lightning Flashes Top-Bottom	Vertical lightning flashes
141	Aura Starfield	Mimic spinning starfield
142	Aura Fiber Optic	Mimic fiber optic effect
143	Aura Noise	Overlays noise

Table 4: FX in the MAC Aura XIP

144	Aura Build Up / Step Down	Filaments turning on/off in order without crossfade
145	Aura Build Up / Fade Down	Filaments turning on/off in order with crossfade
146	Aura Build Up / Random Step Down	Filaments turning on/off in random order without crossfade
147	Aura Build Up / Random Fade Down	Filaments turning on/off in random order with crossfade
148	Aura Random 1 Filament Step	Random 1 filament chase without crossfade
149	Aura Random 1 Filament Fade	Random 1 filament chase with crossfade
150	Aura Random 2 Filament Step	Random 2 filament chase without crossfade
151	Aura Random 2 Filament Fade	Random 2 filament chase with crossfade
152	Aura Random 4 Filament Step	Random 4 filament chase without crossfade
153	Aura Random 4 Filament Fade	Random 4 filament chase with crossfade
154	Aura Random 8 Filament Step	Random 8 filament chase without crossfade
155	Aura Random 8 Filament Fade	Random 8 filament chase with crossfade
156	Aura Split Static	Half-half split Aura which can be indexed
157	Aura Split Rotating Step	Half-half split Aura which rotates without crossfade
158	Aura Split Rotating Fade	Half-half split Aura which rotates with crossfade
159	Aura Odd/Even Step	Odd-even chase without crossfade
160	Aura Odd/Even Fade	Odd-even chase with crossfade
161	Aura Radar Spin Step	Radar line spinning without crossfade
162	Aura Radar Spin Fade	Radar line spinning with crossfade
163	Aura Line Spin Step	Diagonal line spinning without crossfade
164	Aura Line Spin Fade	Diagonal line spinning with crossfade
165	Aura Cross Spin Step	Cross pattern spinning without crossfade
166	Aura Cross Spin Fade	Cross pattern spinning with crossfade
167	Aura Slice Pie 1 Spin Step	Slice of pie spinning without crossfade
168	Aura Slice Pie 1 Spin Fade	Slice of pie spinning with crossfade
169	Aura Slice Pie 2 Spin Step	Two slices of pie spinning without crossfade
170	Aura Slice Pie 2 Spin Fade	Two slices of pie spinning with crossfade
171	Aura Slice Pie 3 Spin Step	Three slices of pie spinning without crossfade
172	Aura Slice Pie 3 Spin Fade	Three slices of pie spinning with crossfade
173	Aura Random Slice Pie Step	Random slice of pie chase without crossfade
174	Aura Random Slice Pie Fade	Random slice of pie chase with crossfade
175	Aura Snake 1 Filament Step	Snake of 1 filament spinning around without crossfade
176	Aura Snake 1 Filament Fade	Snake of 1 filament spinning around with crossfade
177	Aura Snake 2 Filament Step	Snake of 2 filaments spinning around without crossfade
178	Aura Snake 2 Filament Fade	Snake of 2 filaments spinning around with crossfade
179	Aura Snake 4 Filament Step	Snake of 4 filaments spinning around without crossfade
180	Aura Snake 4 Filament Fade	Snake of 4 filaments spinning around with crossfade
181	Aura Snake 8 Filament Step	Snake of 8 filaments spinning around without crossfade
182	Aura Snake 8 Filament Fade	Snake of 8 filaments spinning around with crossfade
183	Aura Vertical Line Step	Vertical line chase without crossfade
184	Aura Vertical Line Fade	Vertical line chase with crossfade
185	Aura Vertical Line Bounce Step	Vertical line bounce without crossfade
186	Aura Vertical Line Bounce Fade	Vertical line bounce with crossfade
187	Aura Horizontal Line Step	Horizontal line chase without crossfade
188	Aura Horizontal Line Fade	Horizontal line chase with crossfade
189	Aura Horizontal Line Bounce Step	Horizontal line bounce without crossfade
190	Aura Horizontal Line Bounce Fade	Horizontal line bounce with crossfade
191	Aura Vertical + Horizontal Line Bounce Step	Vertical and horizontal line bounce without crossfade
192	Aura Vertical + Horizontal Line Bounce Fade	Vertical and horizontal line bounce with crossfade
193-195	*No function*	

Table 4: FX in the MAC Aura XIP

Aura Color Filaments		
196	Aura Color Looks Static	Library of static colored filament patterns which can be selected via the FX speed channel
197	Aura Rainbow Filaments Step	Rainbow pattern without crossfade
198	Aura Rainbow Filaments Fade	Rainbow pattern with crossfade
199	Aura Red-Yellow Filaments Step	Variations in red-yellow tint without crossfade
200	Aura Red-Yellow Filaments Fade	Variations in red-yellow tint with crossfade
201	Aura Yellow-Green Filaments Step	Variations in yellow-green tint without crossfade
202	Aura Yellow-Green Filaments Fade	Variations in yellow-green tint with crossfade
203	Aura Green-Cyan Filaments Step	Variations in green-cyan tint without crossfade
204	Aura Green-Cyan Filaments Fade	Variations in green-cyan tint with crossfade
205	Aura Cyan-Blue Filaments Step	Variations in cyan-blue tint without crossfade
206	Aura Cyan-Blue Filaments Fade	Variations in cyan-blue tint with crossfade
207	Aura Blue-Magenta Filaments Step	Variations in blue-magenta tint without crossfade
208	Aura Blue-Magenta Filaments Fade	Variations in blue-magenta tint with crossfade
209	Aura Magenta-Red Filaments Step	Variations in magenta-red tint without crossfade
210	Aura Magenta-Red Filaments Fade	Variations in magenta-red tint with crossfade
211	Aura Red-White-Blue Step	Red-white-blue bump without crossfade
212	Aura Red-White-Blue Fade	Red-white-blue bump with crossfade
213	Aura Fire	Mimic fire
214	Aura Water	Mimic water
215	Aura Swimming Pool	Mimic swimming pool
216	Aura Ice	Mimic ice
217	Aura Hot and Cold	Hot and cold colors
218	Aura Warm and Fuzzy	Warm and fuzzy colors
219	Aura Silver and Gold	Strobe of silver with hit of gold
220	Aura Gold and Silver	Strobe of gold with hit of silver
221	Aura Electric Arc	Mimic electric arc
222	Aura Plasma	Mimic plasma
223-225	*No function*	
Aura Color Modifier		
226	Aura Spectrum Shifter Static	Shift color spectrum with FX speed channel controlling the offset versus the starting color
227	Aura Spectrum Shifter Step	Step through offset colors with FX speed channel controlling the maximum offset versus the starting color
228	Aura Spectrum Shifter Fade	Fade through offset colors with FX speed channel controlling the maximum offset versus the starting color
229	Aura Pixel Spectrum Shifter Static	Offset filament colors with FX speed channel controlling the maximum offset versus the starting color
230	Aura Pixel Spectrum Shifter Step	Step filaments through offset colors with FX speed channel controlling the maximum offset versus the starting color
231	Aura Pixel Spectrum Shifter Fade	Fade filaments through offset colors with FX speed channel controlling the maximum offset versus the starting color
232	Aura Pixel Spectrum Shifter Random Static	Random offset filament colors with FX speed channel controlling the maximum offset versus the starting color
233	Aura Pixel Spectrum Shifter Random Step	Random step filaments through offset colors with FX speed channel controlling the maximum offset versus the starting color
234	Aura Pixel Spectrum Shifter Random Fade	Random fade filaments through offset colors with FX speed channel controlling the maximum offset versus the starting color
235	Aura Tungsten	Mimic tungsten color shift
236	Aura Tungsten Delay	Mimic tungsten color shift and delayed dimming response
237-239	*No function*	
Aura Time		
240	Aura Video Slo-Mo	Average input from last frames controlled by FX speed channel to create slow-motion effect
241-243	*No function*	

Table 4: FX in the MAC Aura XIP

Beam and Aura Combined		
244	Complete Color Looks Static	Library of static colored pixel and filament patterns which can be selected via the FX speed channel
245	Beam-Aura Step	Beam-Aura chase without crossfade
246	Beam-Aura Fade	Beam-Aura chase with crossfade
247	Aura Ramp Beam Flash	Aura fade plus Beam flash
248	Beam Ramp Aura Flash	Beam fade plus Aura flash
249	Full Thunderstorm	Mimic thunderstorm
250	Full Welding	Mimic welding
251	Full 3-Step Strobe	Chase Beam, Aura, both
252-254	*No function*	
Dimming curve		
255	Virtual dimmers Square Law	

Table 4: FX in the MAC Aura XIP

Control panel menus

Available from MAC Aura XIP firmware version 1.4.x.

Menu level 1	Menu level 2	Menu level 3	Menu level 4	Notes (Default settings in bold print)
DMX SETUP	DMX ADDRESS	**1** – XXX		DMX address (default address = **1**). The DMX address range is limited so that the fixture will always have enough DMX channels within the 512 available.
	CONTROL MODE	COMPACT		Compact DMX control mode
		BASIC		Basic DMX control mode
		EXTENDED		Extended DMX control mode
		LUDICROUS		Ludicrous DMX control mode
		COMPACT DIRECT		Compact Direct DMX control mode
		XB STANDARD		Control mode is backwards-compatible with MAC Aura and MAC Aura XB
		XB EXTENDED		Control mode is backwards-compatible with MAC Aura and MAC Aura XB
	DMX UNIVERSE	1 - 63999		Set DMX universe
ETHERNET SETUP	IP ADDRESS	XXX.XXX.XXX.XXX		Display fixture's static IP address
		PART 1 MSB		Set far left block (most significant byte) of IP address
		PART 2		Set middle left block of IP address
		PART 3		Set middle right block of IP address
		PART 4 LSB		Set far right block (most significant byte) of IP address
	SUBNET MASK	XXX.XXX.XXX.XXX		Display fixture's subnet mask
		EDIT SUBNET MASK	XXX.XXX.XXX.XXX	Display fixture's subnet mask
			XXX.XXX.XXX.XXX	Set subnet mask with 1 bit increments from the left
	MAC ADDRESS	XX:XX:XX:XX:XX:XX		Display fixture's MAC address
	RESET IP SETUP	RESET	ARE YOU SURE? YES/NO	Reset static IP address and subnet mask to default values
FIXTURE ID	**1** – 65535			User-settable fixture ID number and P3 address (default = **1**)

Table 5: Control menus

Menu level 1	Menu level 2	Menu level 3	Menu level 4	Notes (Default settings in bold print)
PERSONALITY	PAN/TILT	PAN INVERT	ON/**OFF**	Inverse DMX pan control: right → left
		TILT INVERT	ON/**OFF**	Inverse DMX tilt control: down → up
		LIMIT PAN/TILT	LIMIT ENABLE	Enable pan/tilt limit functionality
			PAN MIN → -32767	Set minimum pan angle limit
			PAN MAX → 32768	Set maximum pan angle limit
			TILT MIN → -32767	Set minimum tilt angle limit
			TILT MAX → 32768	Set maximum tilt angle limit
			RESET PAN/TILT LIMITS	Confirm with: ARE YOU SURE? YES/NO Returns fixture to default pan/tilt limits. The default limits match GT Truss with half-coupler rigging clamps.
	SPEED	PAN/TILT	**FAST**	**Optimize pan/tilt movement for speed**
			SMOOTH	Optimize pan/tilt movement for smoothness
		EFFECT	FAST	Optimize effects movement for speed
			SMOOTH	Optimize effects movement for smoothness
			FOLLOW P/T	**Effects speed follows the speed setting applied to pan and tilt via DMX or in control menu**

Table 5: Control menus

Menu level 1	Menu level 2	Menu level 3	Menu level 4	Notes (Default settings in bold print)
PERSONALITY (continued)	DIMMER CURVE	LINEAR		Optically linear dimming curve
		SQUARE LAW		**Square law dimming curve**
		INV SQ LAW		Inverse square law dimming curve
		S-CURVE		S-curve (fixture emulates incandescent lamp voltage linear RMS dimming curve)
	TUNGSTEN EMULATOR	ON		Color temperature and dimming characteristics emulate tungsten lamp behavior
		OFF		
	COLOR MODE	**EXTENDED COLOR**		**Color mixing optimized for saturation**
		CALIBRATED		Color mixing optimized for even color rendition across multiple fixtures
	VIDEO TRACKING	ENABLED		Color fading optimized for speed of color changes
		DISABLED		**Color fading optimized for smoothness**
	DMX RESET	**ON**		**Fixture can be reset via DMX**
		OFF		Fixture cannot be reset via DMX
	EFFECT SHORTCUT	**ON**		**Effects take shortest route during changes, crossing open positions if necessary**
		OFF		Effects avoid open positions during effects changes
	COOLING MODE	CONSTANT FAN FULL		Fans optimized for maximum light intensity, fans run at full speed, light intensity reduced if necessary to keep fixture within temperature limits
		CONSTANT FAN MEDIUM		Fans run at medium speed, light intensity reduced if necessary to keep fixture within temperature limits
		CONSTANT FAN LOW		Fans run at low speed, light intensity reduced if necessary to keep fixture within temperature limits
		CONSTANT FAN ULOW		Fans optimized for lowest noise, fans run at ultra-low speed, light intensity reduced if necessary to keep fixture within temperature limits
		REGULATE FANS		**Compromise between light intensity and quietness, fan speed temperature-regulated, light intensity only reduced if fans reach full speed and further action necessary to keep fixture within temperature limits**
	DISPLAY	DISPLAY SLEEP	10 MINUTES	Display goes into sleep mode 10 minutes after last key press
			5 MINUTES	Display goes into sleep mode five minutes after last key press
			2 MINUTES	**Display goes into sleep mode two minutes after last key press**
			ON	Display permanently on
		DISPLAY INTENSITY	10 ... **100 %**	Set display intensity in % (default = **100**)
		DISPLAY ROTATION	**NORMAL**	Display orientation **normal**
			ROTATE 180	Display orientation rotated 180°
		DISPLAY CONTRAST	3 ... **41** ... 100	Adjust contrast of display (default = **41**)

Table 5: Control menus

Menu level 1	Menu level 2	Menu level 3	Menu level 4	Notes (Default settings in bold print)
PERSONALITY (continued)	ERROR MODE	**NORMAL**		**Enable error messages and warnings in display**
		SILENT		Disable error messages and warnings in display (the status LED will still light to indicate fixture status if an error has been detected or the fixture has a warning)
	HIBERNATION MODE	ON		Enable Hibernation Mode (light output set to zero, all effect movement disabled)
		OFF		Disable Hibernation Mode
	SCENE CAPTURE	RECORD	SAVE	Saves all current DMX values as playback scene
		PLAYBACK	ENABLE	Sets fixture to run currently saved playback scene after power cycle / reset. Any new DMX input disables scene playback until next power cycle.
			DISABLE	Disable scene playback functionality
	AURA IN COMPACT	ENABLE		Disabling allows Aura filaments to be OFF in Compact and Compact Direct DMX Modes, or allows Aura filaments to follow Beam LEDs.
		DISABLE		
	AUTO EMPTY WATER	ON		Fixture automatically dims and tilts to drain water buildup from in front of lens when head faces upwards and rain is detected
		OFF		
DEFAULT SET-TINGS	FACTORY DEFAULT	LOAD	ARE YOU SURE? YES/NO	Return all settings (except calibrations) to factory defaults
	CUSTOM 1	LOAD	ARE YOU SURE? YES/NO	Load Custom Settings 1
		SAVE	ARE YOU SURE? YES/NO	Save fixture's current settings as Custom Settings 1
	CUSTOM 2	LOAD	ARE YOU SURE? YES/NO	Load Custom Settings 2
		SAVE	ARE YOU SURE? YES/NO	Save fixture's current settings as Custom Settings 2
	CUSTOM 3	LOAD	ARE YOU SURE? YES/NO	Load Custom Settings 3
		SAVE	ARE YOU SURE? YES/NO	Save fixture's current settings as Custom Settings 3
INFORMATION	POWER ON TIME	TOTAL	0 ... XXX HR	Display hours fixture has been powered on since manufacture (not user-resettable)
		RESETTABLE	CLEAR COUNTER? YES/NO	Display hours fixture has been powered on since last counter reset (user-resettable)
	POWER ON CYCLES	TOTAL	0 ... XXX HR	Display number of times fixture has been powered on since manufacture (not user-resettable)
		RESETTABLE	CLEAR COUNTER? YES/NO	Display number of times fixture has been powered on since last counter reset (user-resettable)
	FW VERSION*	XX.XX.XX		Displays currently active firmware version
	RDM UID*	4D50.XXXXXXXX		Displays fixture's unique RDM ID
	FAN SPEEDS*	HEAD FAN YOKE FAN BASE FAN	0 - XXX RPM	Scroll to display current speed of each cooling fan
	TEMPERA-TURES*	UI PFC PCB PAN/TILT BEAM PIXEL	CURRENT / MIN / MAX X C	Scroll through PCB temperature sensors, then display current, minimum* and maximum* temperature in °C of PCBs *Since fixture was last reset / powered on

Table 5: Control menus

Menu level 1	Menu level 2	Menu level 3	Menu level 4	Notes (Default settings in bold print)
INFORMATION (continued)	WET AND ORIENTATION	LONGEST	0 ... XXX HR	Longest period fixture has been wet without a dry break since last powered on
		CURRENT	0 ... XXX HR	If fixture is wet, how long since it was last dry
		TOTAL TIMES	0 ... XXX	Total number of times fixture has been wet for longer than 90 minutes
		TOTAL	0 ... XXX	Total amount of time fixture has been wet during its lifetime
		WET SENSOR ADC	0 ... 4095	Current value of rain sensor
		ORIENTATION - X	0 ... XXX	Base orientation at last power on, X-axis
		ORIENTATION - Y	0 ... XXX	Base orientation at last power on, Y-axis
		ORIENTATION - Z	0 ... XXX	Base orientation at last power on, Z-axis
DMX LIVE*	RATE	0 - 44 HZ		DMX transmission speed in packets per second
	QUALITY	0 - 100%		Percent of packets received
	START CODE	0 - 255		Value of the DMX start code
	BEAM STROBE ... AURA P3 MIX	XXX		Scroll to see values received on each DMX channel
TEST*	TEST ALL	BEAM DIMMER ... TILT		Run test sequence of all functions To test a specific function, use UP/DOWN buttons to scroll through functions. Press ENTER to pause and press again to restart test sequence. Press MENU button to exit test
	TEST LEDS	BEAM DIMMER ... AURA V. COLOR WHEEL		Run test sequence of LEDs only. Press MENU button to exit test
	TEST EFFECTS	ZOOM		Run test sequence of effects. To test a specific effect, use UP/DOWN buttons to scroll through groups. Press ENTER to pause and press again to restart test sequence. Press MENU button to exit test
	TEST PAN/TILT	PAN		Run test sequence of pan functions. Press MENU button to exit test
		TILT		Run test sequence of tilt functions. Press MENU button to exit test
MANUAL CONTROL*	RESET	ALL		Reset fixture
	BEAM STROBE / AURA P3 MIX			Scroll through effects, then manually control an effect

Table 5: Control menus

Menu level 1	Menu level 2	Menu level 3	Menu level 4	Notes (Default settings in bold print)
SERVICE* *(see "Activating service mode" on page 12)*	ERROR LIST	Empty or up to 20 errors		Show all error and warning messages stored in memory.
	FAN CLEAN	ON/**OFF**		Run cooling fans at high speed to dislodge dust and debris.
	PAN/TILT FEEDBACK	**ON**		**Enable pan/tilt position feedback system**
		OFF		Disable pan/tilt position feedback system
	ADJUST *(for use by or with guidance from Martin Service only)*	PAN/TILT AT END STOP	STEP 1	To adjust, move head to end position and press ENTER
			STEP 2	To adjust, move head to end position again and press ENTER
	CALIBRATION	BEAM DIMMER ... AURA BLUE	*Calibration range varies depending on effect*	Scroll through effects, press ENTER to select. Adjust position and press ENTER to confirm.
		LOAD DEFAULTS	LOAD	Load factory default calibration settings
		SAVE DEFAULTS	SAVE	Replace factory default calibration settings with current calibration settings
	EMPTY WATER	START	ARE YOU SURE? → YES/NO	Fixture dims and tilts head to drain any water buildup from front lens
	DRY OFF	START	ARE YOU SURE? → YES/NO	Activate drying off function
	SAFE PARKING	ENABLE	ARE YOU SURE? → YES/NO	Moves head to position where rain / snow cannot accumulate on front lens.
	USB	NO DEVICE		No USB memory device detected at USB port or no firmware detected on USB memory device
		UPDATING FILES		Fixture updating internal memory from USB memory device
		AVAILABLE FIRMWARE	XX.XX.XX ... XX.XX.XX	Select firmware from versions stored in internal memory. Scroll to select version, then press ENTER and confirm your choice to update.

Table 5: Control menus

**The TEMPERATURES, DMX LIVE, MANUAL CONTROL and SERVICE menus are not available when the fixture is operating on battery power.*

Service and display messages

The MAC Aura XIP gives service and maintenance information by displaying a large 3- or 4-character short code and a smaller full-text message in the fixture's display. The short code is visible at a distance, allowing easier reading with the fixture still in the rig, for example, while the full-text message gives more detailed information.

Excessively high temperatures

If any of the temperature sensors reports that the fixture has exceeded its recommended temperature range, the fixture reports a temperature warning and reduces light output to reduce its temperature. If the temperature reaches a dangerous level, light output is shut down completely.

Temperature warnings are canceled and full light output becomes available again as soon as the temperature returns to normal.

Warning messages

Warning messages indicate that either:

- problems might appear in the future if no action is taken, or
- the user needs to pay special attention to a function or procedure when working with the fixture.

The MAC Aura XIP communicates warnings as follows:

- Warning codes are shown continuously in the display and disappear when the user reacts to the warning.
- If more than one warning is detected, all warnings are displayed in sequence.
- If the display is inactive, the fixture's status LED (see Figure 2 on page 10) flashes orange to indicate that there is a warning. Activating the display will show the warning.

The possible warning messages are listed in Table 6 below:

Short code	Long message	Explanation
BANK	BANK NO ACCESS	Error unpacking firmware bank during/after software upload. Fixture will continue to operate on existing firmware. Warning message is cleared by a successful software upload or at the next power off/on cycle.
BATM	BATTERY MODE	Fixture in battery mode. Certain control menu items are not available.
BETW	BEAM TMP HIGH	LED beam pixels sensor detects abnormally high operating temperature.*
CTUP	CONNECTORS UPWARD	Fixture base is installed with connectors facing upward, where there is a risk of water accumulation in case of rain
DRYO	DRYING OFF	Drying off function activated
EMPW	EMPTYING WATER	Fixture draining water from front of head
NEMW	NEED EMPTY WATER	Water buildup in front of head. Draining required.
PFTW*	PFC TEMP HIGH	Power factor correction unit sensor detects abnormally high operating temperature.*
PTTW*	PT TEMP HIGH	Pan/tilt PCB sensor detects abnormally high operating temperature.*
SERV	SERVICE MODE	Fixture in service mode.
SLW	SAFETY LOOP	A safety loop error occurred but is no longer active. Warning message is cleared at next power OFF/ON cycle.

Table 6: Warning messages

Short code	Long message	Explanation
UITW*	UI TEMP HIGH	User interface (LCD display and control panel) PCB sensor detects abnormally high operating temperature.*
WTTL	WET TOO LONG	Fixture has been wet for an extended period. To remove the warning, a complete dry-off procedure is required, especially before storing/transporting the fixture or re-using it in wet conditions. To dry off the fixture, move it to a dry location, wipe it with a cloth to remove pooled water and then activate the DRY OFF program in the SERVICE menu. Check that the fixture is completely dry before storing it.

Table 6: Warning messages

**High temperature warnings are canceled as soon as temperature returns to normal. If temperature reaches cutoff level, the warning is replaced by a cutoff error message.*

Error messages

Error messages indicate that a problem is present. The MAC Aura XIP communicates errors as follows:

- Error messages flash in the display.
- If more than one error is detected, the fixture flashes all errors three times each.
- Errors are shown in the display regardless of display status: they override an inactive display and any other information that the display might be showing.
- If an error is present, the status LED flashes red.

The possible error messages are listed in Table 7 below:

Short code	Long message	Explanation
ACER	AURA CALIB ERROR	Aura calibration data not found.
BCER	BEAM CALIB ERROR	Beam calibration data not found.
BETC	BEAM TMP CUTOFF	Beam PCB temperature cutoff activated.
BETE	BEAM TMP SEN ERR	Beam PCB temperature sensor error.
CELD	COM ERR LED DRV	LED driver communication error.
CEPN	COM ERR PAN	Pan communication failure.
COLD	FIXTURE COLD	Fixture too cold. Physical movement of effects is disabled until fixture has warmed up.
FAN	BASE FAN ERR	Base cooling fan error.
FAN	HEAD FAN ERR	Head cooling fan error.
FAN	YOKE FAN ERR	Yoke cooling fan error.
FBEP	PAN FBACK ERR	Pan position magnetic indexing system timeout. Fixture is unable to correct pan position (but pan movement will often still be possible).
FBET	TILT FBACK ERR	Tilt position magnetic indexing system timeout. Fixture is unable to correct tilt position (but tilt movement will often still be possible).
MMER	MISSING MODULE ERR	Impossible to communicate with a module that should be present. Module missing or not correctly connected.
PAER	PAN ERROR	Pan position electrical indexing system timeout.
PFTC	PFC TEMP CUTOFF	Power factor correction system temperature cutoff activated.
PFTE	PFC TEMP SEN ERR	Power factor correction system temperature sensor error.
PSER	PAN TEMP SEN ERR	Pan motor temperature sensor error.
PTCM	P/T SENSOR ADJUST	Pan/tilt sensors are incorrectly adjusted.
PTTC	PT TEMP CUTOFF	Pan/tilt PCB temperature cutoff activated.
PTTE	PT TEMP SEN ERR	Pan/tilt PCB temperature sensor error.
SEER	ARTNET SOURCES EXCEED	Number of Art-Net control sources exceeded.
SEER	SACN SOURCES EXCEEDED	Number of sACN control sources exceeded.

Table 7: Error messages

Short code	Long message	Explanation
SLER	SAFETY LOOP	Safety loop circuit activated. A temperature circuit breaker has shut down LEDs. Circuit breaker resets automatically after temperature has returned to normal operating range.
TSER	TILT SENSOR ERROR	Fixture unable to retrieve data from Tilt position sensor.
UELD	UPL ERR LED DRV	Could not upload new LED driver software during a firmware upload. Error cleared when new firmware is uploaded successfully or power is cycled off and on.
UEPT	UPL ERR PAN/TILT	Could not upload new pan/tilt system software during a firmware upload. Error cleared when new firmware is uploaded successfully or power is cycled off and on.
UITC	UI TEMP CUTOFF	User interface (LCD display and control panel) temperature cutoff activated.
UITE	UI TEMP SEN ERR	User interface (LCD display and control panel) temperature sensor error.
ZOER	ZOOM ERROR	Zoom system position error.

Table 7: Error messages

Control orientation reference

The control orientation reference in this section is valid for the fixture in Compact, Basic, Extended, Ludicrous and Compact Direct modes only. When the fixture is used in XB Standard or XB Extended mode, it will behave like a MAC Aura XB (see the MAC Aura XB user manual).

Pan and tilt control

Home position / Front of fixture

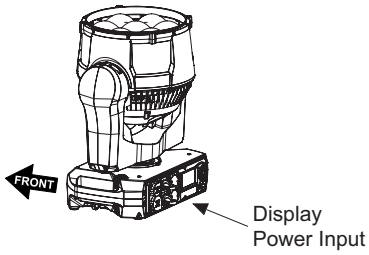

DMX disconnected

Tilt range = 220°

Tilt = DMX 0

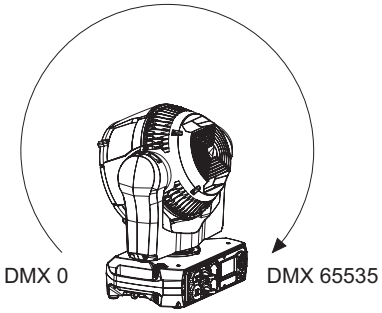

Pan = DMX 32768

Tilt = DMX 32768

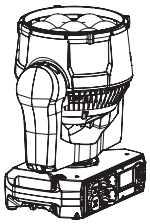

Pan = DMX 32768

Tilt = DMX 65535

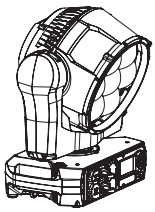

Pan = DMX 32768

Pan range = 540°

Pan = DMX 0

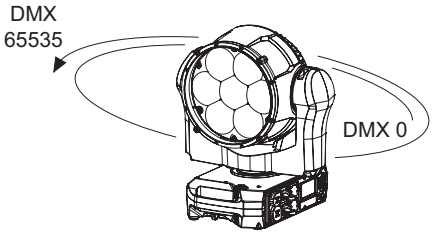

Tilt = DMX 5500

Pan = DMX 32768

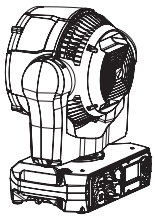

Tilt = DMX 5500

Pan = DMX 65535

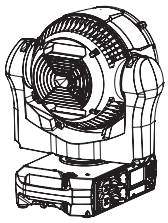

Tilt = DMX 5500

Zoom control

Zoom Wide = DMX 65535

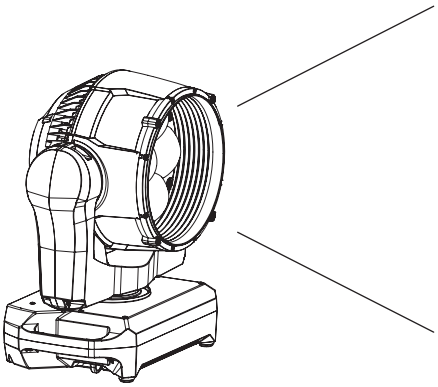

Zoom Narrow = DMX 0

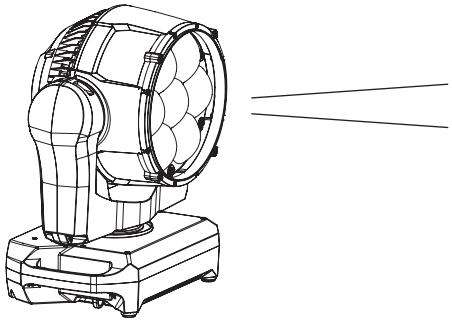

MAC Aura XIP

Safety and Installation Manual

Martin®

Dimensions

All measurements are given in millimeters

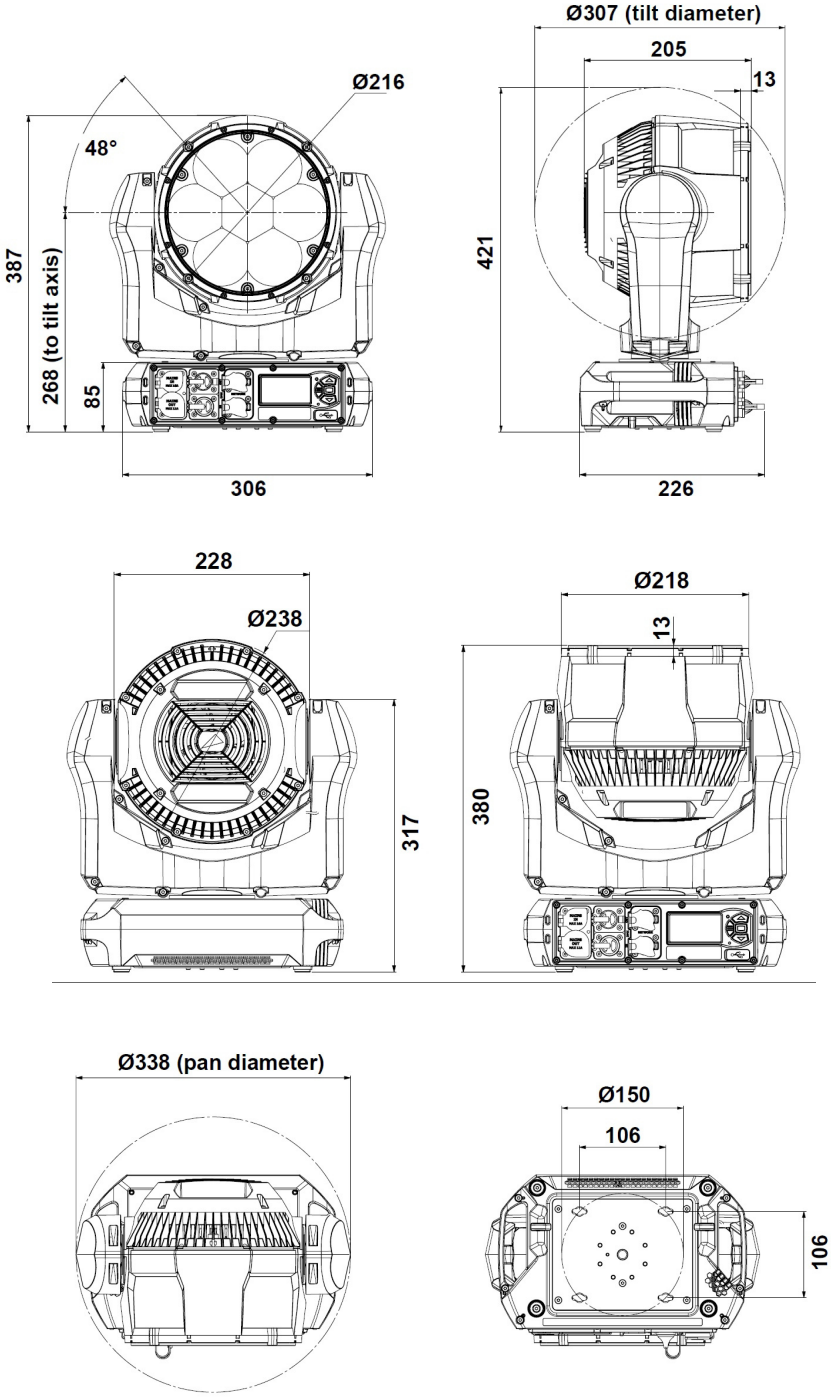

©2022-2026 HARMAN PROFESSIONAL DENMARK ApS. All rights reserved. Features, specifications and appearance are subject to change without notice. HARMAN PROFESSIONAL DENMARK ApS and all affiliated companies disclaim liability for any injury, damage, direct or indirect loss, consequential or economic loss or any other loss occasioned by the use of, inability to use or reliance on the information contained in this document. Martin is a registered trademark of HARMAN PROFESSIONAL DENMARK ApS registered in the United States and/or other countries.

HARMAN PROFESSIONAL DENMARK ApS, Olof Palmes Allé 44, 8200 Aarhus N, Denmark
HARMAN PROFESSIONAL, INC., 8500 Balboa Blvd., Northridge CA 91325, USA

www.martin.com

MAC Aura XIP Safety and Installation Manual, English, Revision E

Contents

Safety Information 4
Introduction 9
Packing and unpacking 9
Physical installation 10
Installation safety 10
Installation hardware 10
Installation orientation 11
Installation options 11
AC power 14
Power input 14
Service and maintenance 16
Cleaning 16
Using the fixture 17
Troubleshooting 18
Compliance and legal 18

Safety Information

WARNING!
Read the safety precautions in this section before installing, powering, operating or servicing this product.

The following symbols are used to identify important safety information on the product and in this document:

DANGER! Safety hazard. Risk of severe injury or death.	DANGER! Hazardous voltage. Risk of lethal or severe electric shock.	WARNING! Fire hazard.	WARNING! Burn hazard. Hot surface. Do not touch.	WARNING! Intense light emission.	WARNING! Refer to user documentation.

Warning! The MAC Aura XIP from Martin® contains components that are accessible and live at high voltage while the fixture is connected to power. These components remain under tension for up to five minutes after power is disconnected.

Only qualified technicians are permitted to open the fixture. Users may carry out external cleaning and clean the air filter as described in this manual, following the warnings and instructions provided, but any service operation not described in this manual or in the fixture's User Guide must be referred to an authorized Martin service technician.

Warning! Risk Group 2 product according to IEC/TR 62778 for blue light only (see "Protection from eye injury" on page 7). This product produces intense light output that may be hazardous if suitable precautions are not taken. Do not view the light output with optical instruments or any device that may concentrate the beam.

Warning! When using the MAC Aura XIP in an outdoor location, keep it powered on constantly. However, if extreme conditions such as flooding arise, shut down power to the fixture immediately to avoid any possibility of personal injury.

The MAC Aura XIP is designed to be used under any weather conditions, but do not expose it to an artificially high volume of water (in a fountain, waterfall or shower, for example). The most extreme rain ever recorded had a volume of 400 mm / 16 inches per hour. The MAC Aura XIP is designed to withstand such a condition. A fountain, waterfall or shower can create a much bigger volume of water (up to 15 000 mm / 50 feet per hour). The MAC Aura XIP is not designed to withstand conditions like these.

This product presents risks of severe injury or death due to fire and burn hazards, electric shock and falls if the safety precautions in this manual are not followed.

Read this manual before installing, powering or servicing the fixture. Follow the safety precautions and observe all warnings in this manual, in the MAC Aura XIP User Guide and printed on the fixture.

The latest versions of this Safety and Installation Manual and the MAC Aura XIP User Guide are available for download from the MAC Aura XIP areas of the Martin website at www.martin.com. Before you install, operate or service the fixture, check the Martin website and make sure that you have the latest user documentation for the fixture. Document revisions are indicated at the bottom of page 2.

The fixture is IP54-rated and may be installed outdoors following the directions given in this manual for a maximum of six consecutive months, after which it must be thoroughly inspected and cleaned and any parts that show signs of wear and/or premature aging must be replaced. The fixture must not be installed in a marine environment or on a marine vessel unless it is located indoors in a protected environment. Do not install the fixture in any location where airborne agents that are aggressive to materials are present (where

the air has a high salt or chlorine content in a marine or swimming pool environment, for example). The fixture may be installed in coastal areas on condition that it is regularly inspected and cleaned (at least once every six months) as described in this manual. Please note that fixtures that are used outdoors - especially in coastal areas - may show accelerated wear and tear that can reduce the product's service life.

The MAC Aura XIP is for professional use as a stage light only. It is not for household or general lighting applications. The installer and/or owner must comply with all locally applicable laws, codes, and regulations when installing, powering, operating or servicing the fixture. This document does not constitute engineering, structural, or installation design advice. Responsibility for the selection and verification of all installation hardware, fasteners, mounting structures, and site-specific conditions rests solely with the installer and/or owner.

The installer and/or owner are solely responsible for assessing the suitability of the structure, surface, and environment, and for selecting, verifying, and installing all anchors, fasteners, mounting hardware, and secondary safety devices. Martin does not design, approve, or certify the installation method, supporting structure, or any third party hardware.

Install, operate and service Martin products and accessories only as directed in their user documentation, or you may create a safety hazard or cause damage that is not covered by product warranties.

The latest software, manuals and other documentation for all Martin products are available for download at www.martin.com

Technical Support

If you have questions about how to install or operate the fixture safely, please contact Harman Professional Technical support:

- For technical support in North America, please contact: HProTechSupportUSA@harman.com
  Phone: (844) 776-4899
- For technical support outside North America, please contact your national distributor.

PROTECTION FROM ELECTRIC SHOCK

- Before connecting any devices to the fixture's power throughput socket, check the maximum current draw of all the devices that you will connect to power in a chain. Do not exceed a total of 16 amps maximum when you add together the current draw for the entire chain, including the first device in the chain.
- If you relay power from one fixture to another using power throughput sockets, observe the following safety limits, or you may create a risk of fire and electric shock:
  - Do not connect more than four (4) MAC Aura XIP fixtures in total to each other in an interconnected chain when supplying the fixture with mains power within the range 100-120 V.
  - Do not connect more than eight (8) MAC Aura XIP fixtures in total to each other in an interconnected chain when supplying the fixture with mains power within the range 200-240 V.
- The fixture has an ingress protection rating of IP54 that is applicable in EN/IEC regions (Europe and other countries). It has a 'Damp locations' rating that is applicable in the USA and Canada. Damp locations are considered to be partially protected locations under stage and event canopies, marquees, tents, roofed open bars and similar locations. Do not immerse it. Do not expose it to high-pressure water jets.
- The fixture is designed for temporary outdoor installation only. Installing it permanently in an outdoor location could cause accelerated aging that would potentially affect its IP54 rating. This would create a potential safety hazard and a risk of damage. Do not use the fixture for permanent outdoor lighting.
- Do not install the fixture in locations where the air is aggressive to materials (where the air has a high salt or chlorine content, close to the sea or a swimming pool, for example).
- Isolate the fixture from power immediately if extreme conditions such as flooding arise.
- The fixture is rated IP54 / 'Damp locations' only when the following types of connector are used on cables connected to the fixture:
  - Neutrik powerCON TRUE1 NAC3FX-W-TOP connector at the power IN socket,
  - Neutrik powerCON TRUE1 NAC3MX-W-TOP connector at the power THRU socket,
  - Neutrik TOP series 5-pin locking XLR connectors at the XLR (DMX, RDM) data sockets, and
  - Neutrik TOP series etherCON connectors at the Ethernet (Art-Net, sACN, P3) data sockets.

  Use only these connector types and use only cables that are suitable for the given application with respect to humidity, water and sunlight resistance.
- All power and data connectors are fitted with rubber caps to protect from water ingress. Keep rubber caps installed at all times on all connectors that are not in use.
- Arrange cables so that they arrive at connectors from below. With this arrangement, gravity will cause any condensation or water droplets to run away from connectors.

- Do not install the fixture with the connections panel facing upwards in locations that require an IP54 / ‘Damp locations’ rating.
- Do not remove any cover from the fixture except as described under “Service and maintenance” on page 16.
- Disconnect the fixture from AC mains power before servicing it and when it is not in use.
- Ensure that the fixture is electrically connected to ground (earth).
- Use only a source of AC mains power that complies with local building and electrical codes and has both overload and ground-fault (earth-fault) protection.
- The fixture accepts AC mains power at 100-240 V (nominal), 50/60 Hz. Do not connect the fixture to mains power that is not within this range.
- The fixture has a maximum total power consumption of 340 W.
- The fixture draws a maximum total current of 3.9 A at 100-120 V and a maximum total current of 1.8 A at 200-240 V.
- The fixture draws a typical half-cycle RMS inrush current of 7 A for the first 10 milliseconds when mains power is first applied to the fixture at 230 V, 50 Hz.
- The power input cable must be 12 AWG or 2.5 mm^2 minimum conductor size and heat-resistant to 90° C (194° F) minimum. Cables must have three conductors and an outer cable diameter of 6 - 12 mm (0.24 - 0.47 in.). In North America the cable must be UL/CSA-recognized, hard usage, type SJT, SJOOW or better. In the EU, the cable must be type H05RN-F, H07RN-F or better.
- Before using the fixture, check that all power distribution equipment, connectors and cables are in perfect condition and rated for the current requirements of all connected devices.
- Isolate the fixture from power immediately if the power plug or any seal, cap, cover, cable, or other component is damaged, defective, deformed, showing signs of water ingress or showing signs of overheating. Do not reapply power until repairs have been completed.
- Do not operate the fixture in ambient temperatures below -10° C (14° F). Do not operate the fixture in ambient temperatures below 5° C (41° F) if ice is forming on the fixture. Dry the fixture carefully as described in this manual before storage or transportation in a flightcase or packaging where the ambient temperature may fall below freezing, because temperatures below freezing combined with humidity can cause damage and create a safety hazard.
- The fixture’s DMX and Ethernet transceivers are isolated/SELV to prevent ground loops and for safety reasons.
- The fixture contains components that are accessible and live at high voltage while the fixture is connected to power and that remain under tension for up to five minutes after power is disconnected. Wait for at least five minutes after disconnecting from power before opening any of the fixture’s covers.
- Refer any service operation not described in this manual or in the MAC Aura XIP User Guide to Martin Service or an authorized Martin Service partner.
- The light source contained in this fixture shall be replaced by Martin Service or an authorized Martin Service partner only.
- Do not use this equipment at an altitude of more than 2000 m (6570 ft.) above sea level.

PROTECTION FROM BURNS AND FIRE

- The exterior of the fixture becomes hot during use. After 5 minutes of operation a surface temperature of 60° C (140° F) shall be expected. The maximum steady state surface temperature is also 60° C (140° F). Avoid contact by persons and materials.

- Allow the fixture to cool for at least 30 minutes before handling.
- Keep all combustible materials (e.g. fabric, wood, paper) at least 0.2 m (8 in.) away from the fixture.
- Keep flammable materials well away from the fixture.
- Ensure that there is free and unobstructed airflow around the fixture.
- Provide a minimum clearance of 0.2 m (8 in.) around fans and air vents.
- Do not illuminate surfaces within 1.0 m (3.3 ft.) of the fixture.
- Do not expose the front lens to sunlight or any other strong light source from any angle. Lenses can focus the sun's rays inside the fixture, creating a potential fire hazard.
- Do not attempt to bypass thermostatic switches or fuses.
- Do not operate the fixture if the ambient temperature (Ta) exceeds 40° C (104° F).
- Do not modify the fixture in any way not described in this manual or the fixture’s User Guide or install other than genuine Martin parts. Do not stick filters, masks or other materials onto any lens or other optical component. Use only accessories approved by Martin to mask or modify the light beam.

PROTECTION FROM EYE INJURY

- This fixture corresponds to Risk Group 2 according to IEC/TR 62778. It emits possibly hazardous optical radiation.
- The fixture falls into the Risk Group categories shown below according to IEC/TR 62778 under worst-case conditions:

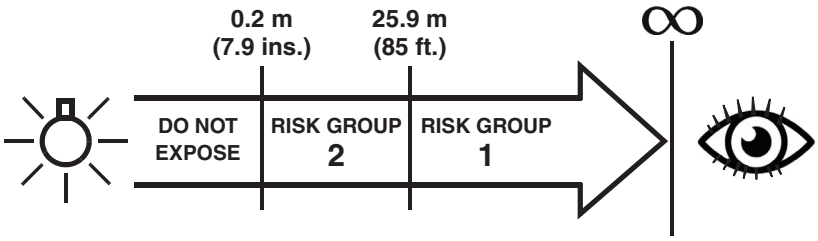

- At a distance of less than 0.2 m (7.9 in.) from the fixture, the light output can potentially cause eye or skin injury before an exposed person's natural aversion responses (blink reflex and reaction to skin discomfort) can protect them. At distances greater than 0.2 m (7.9 in.), potential eye and skin injury hazards from the light output are normally prevented by natural aversion reflexes.
- Position the fixture so that persons cannot be exposed to the fixture's light output at a distance of less than 0.2 m (7.9 in.) from the fixture, and so that prolonged staring into the light output at less than 25.9 m (85 ft.) from the fixture is not expected.
- Do not stare at the light source.
- Do not look directly into the fixture’s light output.
- Do not look at LEDs with magnifiers, telescopes, binoculars or similar optical instruments that may concentrate the light output.
- Ensure that persons are not looking at the fixture when the fixture lights up suddenly. This can happen when power is applied, when the fixture receives a DMX signal, or when certain control menu items are selected.
- Provide well-lit conditions to reduce the pupil diameter of anyone working on or near the fixture.

PROTECTION FROM INJURY

- The fixture weighs 8.9 kg (19.7 lbs.).
- The manufacturer's responsibility is limited to the fixture and the Martin-supplied accessories described in this manual, solely with respect to their mechanical compatibility with the fixture. Any rigging, suspension, fasteners, attachment points or safety devices external to the fixture that are used together with the fixture are the sole responsibility of the installer and/or owner to select, verify for suitability, and correctly install. The installer and/or owner bear sole responsibility for ensuring that all such hardware is appropriate for the specific structure, load, and environment of the installation and complies with all locally applicable laws, building codes, regulations, and safety standards. Martin/Harman's supply of or reference to any accessory does not constitute approval of that accessory for any particular installation application or environment.
- Fasten the fixture securely to a fixed surface or structure when in use. The fixture is not portable when installed.
- The installer is solely responsible for assessing and verifying that any supporting structure and all hardware used to support the fixture can hold at least six (6) times the total weight that they support (this is also referred to as a working coefficient 6 or better). Local regulations may require a higher safety factor; the installer must comply with all applicable requirements.
- Do not exceed the Entertainment Load Limit (ELL), Working Load Limit (WLL) or Safe Working Load (SWL) marked on any rigging hardware or load-bearing accessories, and ensure that the declared working coefficient complies with all applicable local requirements.
- Ensure that all supporting structures and all generic rigging hardware items (truss systems, rigging clamps, omega brackets etc.) are in perfect condition, are approved by a professional body such as TÜV for the weight that they will support, and that they comply with all locally applicable regulations.
- Ensure that all such supporting structures and hardware items are suitable for the installation environment and will be stable under all conditions, taking wind, weather, temperature, movement and vibration factors into account. This assessment is the sole responsibility of the installer. Monitor weather conditions and take all appropriate safety precautions if a hazard is forecast or present.
- If the fixture is installed in a location where it may cause injury or damage if it falls, install as directed in this manual a secondary attachment such as a safety cable that will hold the fixture if a primary

attachment fails. The secondary attachment must be approved by a recognized testing authority (such as TÛV or an equivalent body acceptable under locally applicable law) as a safety attachment for the weight that it secures, must comply with all locally applicable standards (including, where applicable, EN 60598-2-17:2018 Section 17.7.6 and ANSI E1.6-1 or equivalent), and must be capable of bearing a static suspended load that is six (6) times the weight of the fixture and all installed accessories. The installer is solely responsible for identifying and complying with all applicable local standards. In outdoor installations, the safety cable must be stainless steel, grade AISI 316 or better.

- Eliminate as much slack as possible in the safety cable (by looping it more than once around the rigging truss, for example). Make sure that, if the primary attachment fails, the fixture cannot fall more than 20 cm (8 inches) maximum before the safety cable catches it.
- If the safety cable attachment point becomes deformed, do not suspend the fixture. Have the fixture repaired by an authorized Martin service partner.
- Use the handles on the base or head when carrying the fixture.
- To suspend the fixture from rigging structures, use either:
  - one high-strength steel M12 bolt and one rigging clamp or
  - two evenly spaced omega brackets with two rigging clamps.

  Do not use only one omega bracket and clamp to suspend the fixture.
- If suspending the fixture using one M12 bolt and one rigging clamp, make sure that the bolt protrudes minimum 20 and maximum 25 mm (minimum 0.8 and maximum 1 inch) inside the base of the fixture when installed and tightened. Apply Loctite 243 or a similar threadlocker to the threads of the bolt before inserting and tightening.
- When clamping fixtures to a truss or other supporting structure in any orientation apart from hanging vertically with the head pointing downwards, use half-coupler rigging clamps. Do not use G-clamps, quick-trigger clamps or any other type of clamp that does not completely encircle the supporting structure when fastened.
- **In outdoor installations**, the owner and/or installer must inspect the fixture and all installation hardware (including rigging hardware, mounting hardware, fasteners and safety cables) at least once every 6 months to check their condition. This inspection obligation is the sole responsibility of the owner and/or installer. If the fixture or installation hardware show any signs of damage, defect, wear or corrosion you must remove them from the installation and repair or replace them. Failure to carry out required inspections and maintenance may result in safety hazards and will void any claim against Martin/Harman arising from or related to the condition, suitability, or integrity of the installation or installation hardware, including any failure that such inspection would have detected.
- In wet or humid locations, use insulating sleeves, washers or coatings to prevent the galvanic corrosion that can weaken hardware if different metals (steel and aluminum, for example) are installed in contact with each other.
- Check that all external covers and rigging hardware are securely fastened.
- Block access below the work area and work from a stable platform whenever installing, servicing or moving the fixture.
- Allow enough clearance around the head to ensure that it cannot collide with a person or object such as another fixture when it moves.

Introduction

Thank you for selecting the MAC Aura XIP lighting fixture from Martin®.

This Safety and Installation Manual is supplied with the fixture. It gives details of installing and servicing the fixture. The MAC Aura XIP User Guide, containing full instructions to help you set up, control and monitor the fixture, is available in multiple languages for download from the MAC Aura XIP area of the Martin website at www.martin.com. If you have any difficulty locating this document, please contact your Martin supplier for assistance. The MAC Aura XIP area of the Martin website also contains full product specifications and information to help you order accessories such as cables, flightcases etc.

Before installing, operating or servicing the MAC Aura XIP, please check the fixture's area of the Martin website at www.martin.com and make sure that you have the latest user documentation for the product.

Not all product specifications are included in the fixture's user documentation. You can find full specifications for the fixture in the MAC Aura XIP area of the Martin website.

Packing and unpacking

Important! ***Allow the fixture to cool for 30 minutes before packing it for storage or transport in a flightcase or packaging. If the fixture can be exposed to temperatures below 5° C (41° F), dry the fixture before packing it in order to avoid any damage that might be caused by water freezing.***

The MAC Aura XIP is supplied in a cardboard box with either an expanded polystyrene insert or a dual SiP insert that is intended for use in a flightcase supplied by Martin or other flightcase supplier. The cardboard box is designed to protect the fixture during initial shipment only. We strongly recommend that you store and transport fixtures in the rugged flightcase available from Martin (or custom flightcase of the same quality) using the SiP insert supplied with the fixture. The Martin flightcase holds six fixtures.

See the MAC Aura XIP area of the Martin website at www.martin.com for details of flightcases and other accessories available for this fixture.

Drying the fixture before storage or transport

The fixture has a dry-off function that you are recommended to use before storage or transportation in a flightcase or packaging. The dry-off function reduces the risk of condensation and corrosion. It can be an advantage to wipe the fixture quickly with a dry cloth before starting the dry-off function.

If you have packed the fixture in its flightcase while it is still wet, you can still run the dry-off function when you return the fixture to the warehouse before putting it into storage.

If the fixture's sensors detect the need to run the dry-off procedure, the message **WTTL** (WeT Too Long) will appear in the fixture's display.

Dry-off procedure

A complete dry-off procedure will take approximately one hour.

To activate the dry-off function:

- In the fixture's control panel, navigate to **Service** → **Dry Off** and confirm with **Yes**, or
- on the Control/Settings DMX channel, go to the **Dry Off** value and hold for 5 seconds.

The fixture will start the drying off procedure and continue even if the DMX or other control signal is removed. The message **Drying Off** will appear in the fixture's display while the procedure is running.

Avoiding condensation

If you move the fixture from a cold to a warm environment, remove it from its flightcase or packaging and give it at least two hours to acclimatize before you apply power. This will help to avoid damage due to condensation.

Physical installation

Installation safety

Warning! Read the "Safety Information" section starting on page 4 before installing the fixture.

Powerful light can damage the control panel display. Do not point the output from other lighting fixtures at the MAC Aura XIP.

The MAC Aura XIP is designed and tested according to the IP54 standard. This means that the fixture is dust-protected, not dust-tight. Ingress of dust is not entirely prevented, but it shall not enter in sufficient quantity to interfere with the safe operation of the fixture. If the MAC Aura XIP is used in dusty or sandy environments, intense cleaning will be required after use.

The fixture is designed for permanent or temporary indoor use or for temporary (maximum six consecutive months) outdoor use. A fixture with an IP54/'Wet locations' rating can withstand rain and splashing water, but it cannot withstand high pressure water jets or immersion in water.

To avoid head collisions when installing MAC Aura XIP fixtures beside each other, allow a minimum center-to-center distance between fixtures of 350 mm (13.8 in.). The fixture also contains a programmable pan/tilt limitation system that can be used to limit head movement in order to prevent head collisions. See the MAC Aura XIP User Guide for details.

See Figure 1. The MAC Aura XIP's lens can focus sunlight and strong artificial light, creating a potential fire hazard and causing damage that is not covered by the product warranty. Position or shade the head so that the front lens will not be exposed to sunlight or another strong light source from any angle – even for a few seconds.

When the fixture is installed outdoors and is not in use, we recommend that you activate Safe Parking mode using either the DMX Settings channel, RDM, P3 or the fixture's onboard control menu. This will make sure that the head does not point towards the sun and thus prevent sunlight damage. It will also make sure that the head does not point upwards where rain can collect in front of the lens.

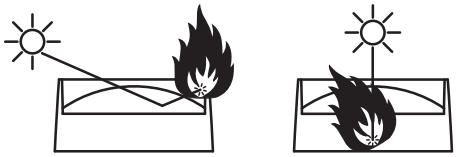

Figure 1: Potential sunlight damage

The fixture weighs 8.9 kg (19.7 lbs.), not including installation hardware. See "Dimensions" on page 2 for details of the fixture's physical dimensions.

Installation hardware

Two omega brackets are supplied with the fixture. Martin can supply as accessories suitable rigging clamps and safety cables that are approved for the weight of the fixture. Contact your Martin supplier for details.

Omega bracket for rigging clamp attachment

Half-coupler rigging clamp, P/N 91602005

Safety cable, 60 kg SWL, black = P/N 91604006 silver = P/N 91604007

Figure 2: Martin rigging hardware

Installation orientation

See Figure 3. An arrow marked **FRONT** is provided on the base of the fixture to show the direction of the front of the fixture. You should normally install the fixture with the arrow pointing towards the target to be illuminated.

In wet or damp locations, install the fixture with the connections panel facing downwards. Ensure that cables arrive from below the fixture.

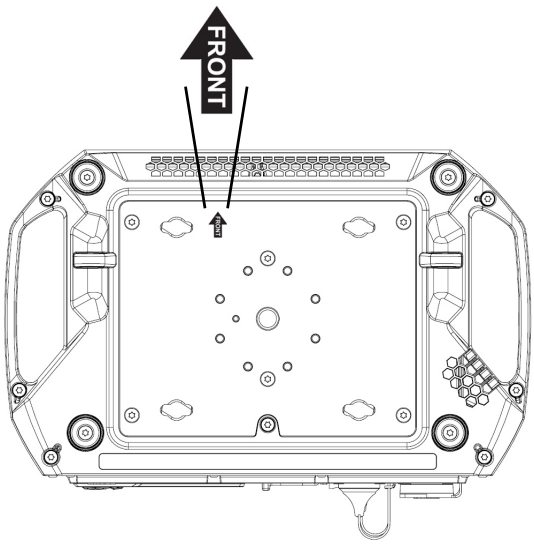

Figure 3: Front of fixture

Installation options

The MAC Aura XIP can be fastened to a surface such as a stage or mounted on a truss in any orientation using either:

- two omega brackets and rigging clamps, or
- a single rigging clamp and an M12 bolt.

Standing the fixture on a flat surface

The fixture can be placed on a hard, fixed, flat horizontal surface provided that there is no risk that it may cause an obstruction or be knocked over. The installer and/or owner is solely responsible for ensuring that the surface can support at least six (6) times the weight of all items that it will support and for taking dynamic loads into account. Martin does not evaluate or approve the suitability of any surface for this purpose.

If you install the fixture in a location where it may cause injury or damage if it falls, secure it as directed in this chapter with a securely anchored safety cable.

Mounting on a truss with two omega brackets and rigging clamps

The MAC Aura XIP can be clamped to a truss or similar rigging structure in any orientation using two omega brackets and two rigging clamps. Two suitable omega brackets are supplied with the fixture.

See Figure 4 The four pairs of quarter-turn mounting points in the base accept 106 mm (4.17 in.) center-to-center omega brackets for rigging clamp attachment. The omega brackets can be fastened to the base parallel to the fixture's sides or parallel to the front and back of the fixture.

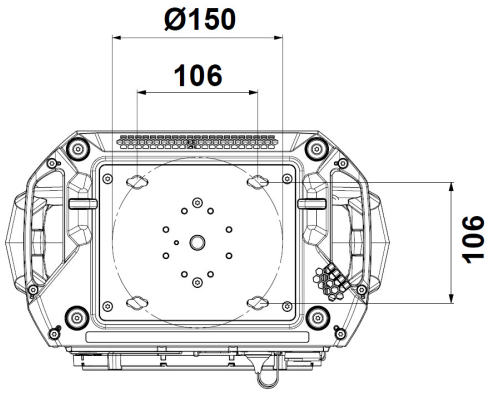

Figure 4: Omega bracket mounting points

To mount the MAC Aura XIP on a rigging truss with two omega brackets and two rigging clamps:

1. Bolt the two rigging clamps securely to omega brackets using high-strength steel (minimum grade 8.8) M12 bolts and self-locking nuts.
2. Align the first clamp and bracket with 2 mounting points in the base, and engage both the clamp bracket's quarter-turn fasteners in corresponding sockets in the base.

3. See Figure 5. Turn the levers on the quarter-turn fasteners a full 90° clockwise to lock.
4. Repeat for the second clamp using the remaining mounting points in the base so that the fixture will be held in balance.
5. Block access under the work area. Working from a stable platform, hang the fixture on the rigging truss with the arrow marked **FRONT** facing towards the area to be illuminated. Tighten the rigging clamps onto the truss chord.
6. Before leaving the fixture, secure it with a safety cable and carry out a safety check (see “Installing a safety cable and preparing for use” on page 13).

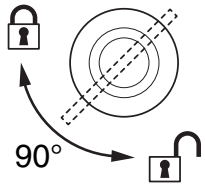

Figure 5: Locking quarter-turn fasteners

Mounting on a truss with a single rigging clamp

The MAC Aura XIP can be clamped to a truss or similar rigging structure in any orientation using a rigging clamp and M12 bolt. The bolt must be high-strength steel (grade 8.8 minimum) and the rigging clamp must be approved for the weight that it supports. Both items must be in perfect condition.

Warning! Check carefully the minimum and maximum length of bolt that will pass into the fixture when tightened and make sure that it is within the limits given below.

When using the Martin half-coupler rigging clamp P/N 91602005 (see Figure 2), use a countersunk M12x35mm Allen bolt (grade 8.8 minimum steel).

To mount the MAC Aura XIP on a rigging truss with a single rigging clamp:

1. Obtain a suitable rigging clamp and M12 bolt.See Figure 6. When the bolt is screwed through the clamp and into the threaded hole in the center of the base, it must protrude **minimum 20 and maximum 25 mm (minimum 0.8 and maximum 1 inch)** into the fixture base. Pass the bolt through the clamp and check that the distance the bolt will protrude into the fixture base is within these minimum and maximum limits before using it. If the bolt is not within these limits, you must find or fabricate an alternative bolt that is correctly dimensioned.

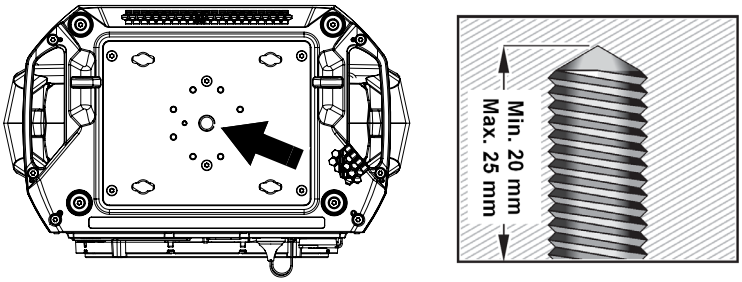

Figure 6. M12 bolt for single rigging clamp

2. See Figure 6. Apply Loctite 243 or a similar threadlocker to the threads of the bolt, then pass the bolt through the rigging clamp and into the threaded hole (arrowed) in the center of the fixture base. Align the clamp so that the fixture will face in the correct direction when it is clamped to the truss and tighten the bolt securely.
3. Block access under the work area. Working from a stable platform, hang the fixture on the rigging truss with the arrow marked **FRONT** facing towards the area to be illuminated. Tighten the rigging clamp onto the truss chord.
4. Before leaving the fixture, secure it with a safety cable and carry out a safety check (see “Installing a safety cable and preparing for use” on page 13).

Installing a safety cable and preparing for use

As soon as you install the fixture, secure it with a safety cable and carry out safety checks as described below:

1. See Figure 7. Install a safety cable that is approved as a safety attachment for the weight of the fixture by looping it through one of the two safety cable attachment points (arrowed, one on each side of the fixture) in the bottom of the base and around a secure anchoring point so that the safety cable will catch the fixture if a primary attachment fails. Remove as much slack as possible from the safety cable (by looping it more than once around the truss, for example).

   Do not use the carrying handles to fasten the safety cable to the fixture – use the dedicated attachment points.
2. Check that there are no combustible materials within 0.2 m (8 in.) or surfaces to be illuminated within 1.0 m (3.3 ft.) of the fixture, and that there are no flammable materials nearby.
3. Check that there is no possibility of the head colliding with objects or other fixtures.
4. Check that other lighting fixtures cannot project light at the MAC Aura XIP, as powerful illumination can damage the fixture's display.

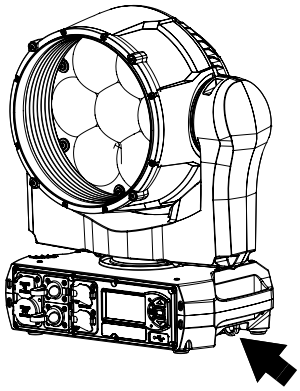

Figure 7: Safety cable attachment points

AC power

Warning! Read the "Safety Information" section starting on page 4 before connecting the fixture to AC mains power.

For protection from electric shock, the fixture must be electrically connected to ground (earth). The AC mains power distribution circuit must be equipped with a fuse or circuit breaker and ground-fault (earth-fault) protection.

The MAC Aura XIP features an auto-sensing switch-mode power supply that automatically adapts to AC mains power at 100-240 V (nominal), 50/60 Hz. Do not connect the fixture to power that is not within this range.

The fixture's maximum current draw is as follows:

- At 100-120 V~: 3.9 A
- At 200-240 V~: 1.8 A

Typical half-cycle RMS inrush current: 7 A at 230 V, 50 Hz.

Typical earth-leakage current: 0.43 mA.

Power input

Important! Connect the MAC Aura XIP directly to AC mains power. Do not connect it to a dimmer system; doing so may damage the fixture.

The MAC Aura XIP automatically adapts to AC mains power at 100-240 V (nominal), 50/60 Hz. Connect the fixture only to AC mains power that is within this range.

The fixture requires a power input cable with a Neutrik powerCON TRUE1 NAC3FX-W-TOP female cable connector for AC mains power input. The cable must meet the requirements listed under "Protection from electric shock" on page 5. Martin can supply suitable cables with female Neutrik TRUE1 TOP connectors and can also supply loose connectors. The specifications on the MAC Aura XIP page on the Martin website at www.martin.com give details of all the suitable cables and connectors available from Martin.

Connecting to AC mains power

When powering on, the MAC Aura XIP will draw a half-cycle RMS inrush current of maximum 7 A for the first 10 milliseconds at 230 V, 50 Hz.

We recommend the use of MCBs (Miniature Circuit Breakers) that are classified Type C according to IEC 60898/UL489/CSA C22.2 No. 5.

The power cable can be hard-wired to a building installation circuit or fitted with a mains plug (cord cap) to allow connection to local AC mains power outlets.

If you install a mains plug on the power cable, install a grounding-type (earthed) plug rated minimum 16 A, 250 V (example rating: EN 60309-2 CEE 2P+E 16 A/250 VAC), following the plug manufacturer's instructions. Table 1 shows some possible mains power pin identification schemes; if the pins are not clearly identified, or if you have any doubts about proper installation, consult a qualified electrician.

Wire Color (US)	Wire Color (EU)	Pin	Symbol	Screw (US)
black	brown	live	**L**	yellow or brass
white	blue	neutral	**N**	silver
green	yellow/green	ground (earth)	⏚ or ⏚	green

Table 1: Cord cap (mains plug) connections

If you need to install a Neutrik powerCON TRUE1 TOP connector on a power cable, follow the instructions on the Neutrik website at www.neutrik.com.

Warning! The MAC Aura XIP does not have a power On/Off switch. As soon as you connect an energized power input cable to the fixture or apply power to a power input cable that has already been connected, the fixture will power up: check that there is no safety risk from head movement or intense light output.

To connect the fixture to AC mains power:

1. See Figure 8. Line up the keys in the power input cable connector with the keyways in the MAINS IN socket (**A**). Insert the connector into the socket and twist clockwise to engage. If the connector seems difficult to twist, remove it from the socket, check that you have lined up the keyways correctly and try again – do not use excessive force. Make sure that the connector latch clicks and that the connector is locked into the socket.

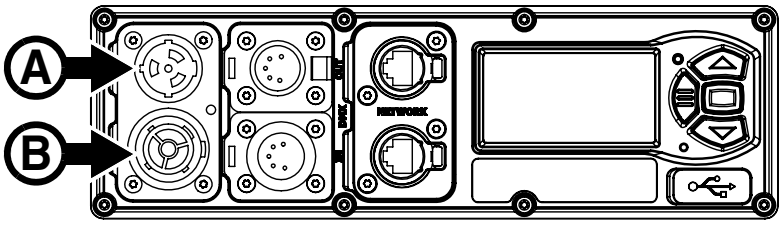

Figure 8: Mains power connections

2. Check that the base is held securely. Be prepared for the fixture to light up and the head to move suddenly. Apply power to the input cable to power the fixture on.

To disconnect from power, pull the release latch on the power input cable connector towards you to unlock the connector, twist the connector counter-clockwise, and then withdraw it from the MAINS IN socket.

Linking fixtures to power in a daisy-chain

Warning! If you link fixtures in a daisy-chain so that they all draw AC mains power via the first fixture, check carefully the Safety Precautions chapter at the beginning of this manual. Use only the cables and connectors specified. Respect the specified safety limits for the total number of fixtures that you can connect to power in one interconnected daisy-chain at your local power voltage.

If you obtain a 16/20 A-rated power input cable and 16/20 A-rated power relay cables from Martin (your Martin supplier can give details of these), you can relay mains power from one fixture to another by connecting fixtures to power in a linked daisy-chain, MAINS THRU socket (**B** in Figure 8) to MAINS IN socket (**A** in Figure 8) If you create a daisy-chain link like this, you must respect the safety limits given in the Safety Precautions chapter at the beginning of this manual, or you may create a risk of fire and electric shock.

To avoid any unnecessary tripping of miniature circuit breakers when creating a daisy chain, we recommend that you:

- connect a maximum of five (5) fixtures to mains power in a daisy-chain at 100-120 V when using a 20 A Type C RCBO with a 10 mA earth leakage rating.
- connect a maximum of eight (8) fixtures to mains power in a daisy-chain at 200-240 V when using a 16 A Type C RCBO with a 10 mA earth leakage rating.

Service and maintenance

Warning! Read the Safety Information chapter at the beginning of this manual before servicing the MAC Aura XIP.

Important! Excessive dust, smoke fluid, and particle buildup degrades performance, causes overheating and will damage the fixture. Damage caused by inadequate cleaning or maintenance is not covered by the product warranty.

Pressing MENU and ENTER buttons immediately when the fixture name appears in the display while powering the fixture on puts the fixture into service mode, in which pan and tilt motors are deactivated and SERV appears in the display. To take the fixture out of service mode, power off and then power on again normally.

The MAC Aura XIP User Guide (available for download from the MAC Aura XIP page on www.martin.com) gives full details of the menus in the fixture's control panel.

The user must clean the MAC Aura XIP periodically to maintain optimum performance and cooling. The user may also upload firmware (fixture software) to the fixture via the DMX data input port, Ethernet port or USB port using firmware and instructions from Martin. All other service operations on the MAC Aura XIP must be carried out by Martin, its approved service agents or trained and qualified personnel using the official Martin service documentation for the MAC Aura XIP.

Installation, on-site service and maintenance can be provided worldwide by the Martin Professional Global Service organization and its approved agents, giving owners access to Martin's expertise and product knowledge in a partnership that will ensure the highest level of performance throughout the product's lifetime. Please contact your Martin supplier for details.

It is Martin policy to apply the strictest possible calibration procedures and use the best quality materials available to ensure optimum performance and the longest possible component lifetimes. However, optical components are subject to wear and tear over the life of the product, resulting in gradual changes in color over many thousands of hours of use. The extent of wear and tear depends heavily on operating conditions and environment, so it is impossible to specify precisely whether and to what extent performance will be affected. However, you may eventually need to replace optical components if their characteristics are affected by wear and tear after an extended period of use and if you require fixtures to perform within very precise optical and color parameters.

Cleaning

Regular cleaning is very important for fixture life and performance. Buildup of dust, dirt, smoke particles, fog fluid residues, etc. degrades the fixture's light output and cooling ability.

Cleaning schedules for lighting fixtures vary greatly depending on the operating environment. It is therefore impossible to specify precise cleaning intervals for the MAC Aura XIP. Cooling fans suck in airborne dust and smoke particles, and in extreme cases fixtures may require cleaning after surprisingly few hours of operation.

Environmental factors that may result in a need for frequent cleaning include:

- Installation outdoors
- Use of smoke or fog machines.
- High airflow rates (near air conditioning vents, for example).
- Presence of cigarette smoke.
- Airborne dust (from stage effects, building structures and fittings or the natural environment at outdoor events, for example).

If one or more of these factors is present, inspect fixtures within their first few hours of operation to see whether cleaning is necessary. Check again at frequent intervals. This procedure will allow you to assess cleaning requirements in your particular situation. If in doubt, consult your Martin dealer about a suitable maintenance schedule. In outdoor installations you will need to inspect and clean the fixture frequently, at minimum six-month intervals.

Follow these precautions when cleaning the fixture:

- Work in a clean, dry, well-lit area.

- Use gentle pressure only. Do not use any product that contains abrasives. Do not use solvents. Use care when cleaning optical components: surfaces are fragile and easily scratched.
- Use a vacuum cleaner to remove dust and dirt – do not use a pressurized air jet. A vacuum cleaner will remove dirt from the fixture and from the area where you are working. An air jet may blow dirt into cooling areas and components, causing blockages and affecting cooling.
- Use a cloth soaked in warm, soapy water to remove greasy residues. Do not use a pressurized water jet, as this may force water past seals and into the fixture.
- Do not apply a strong vacuum directly to a cooling fan, as the strong airflow may spin the fan blades fast enough to cause damage. Instead, hold the vacuum cleaner nozzle a few centimeters away from the fan and dislodge dust with a soft brush.

Cleaning procedure

To clean the fixture:

1. Disconnect the fixture from power and allow it to cool for at least 30 minutes.
2. Vacuum dust and loose particles from the outside of the fixture and the air vents at the back and sides of the head and in the base, using a soft brush to help dislodge dust. If necessary, wipe away greasy residues using a cloth soaked in warm, soapy water.
3. Clean the front lens on the front of the head by wiping gently with a soft, clean, lint-free cloth moistened with a weak detergent solution. Do not rub the surface hard: lift particles off with a soft repeated press. Dry with a soft, clean, lint-free cloth or low-pressure compressed air. Remove stuck particles with an unscented tissue or cotton swab moistened with glass cleaner or distilled water.
4. Check that the fixture is dry before storage or transport (see “Drying the fixture before storage or transport” on page 9).

Using the fixture

Before using the fixture, download and read the latest version of the MAC Aura XIP User Guide from the MAC Aura XIP area of the Martin website at www.martin.com. The User Guide contains details of:

- The effects available in the fixture.
- The control options available using DMX, RDM, Art-Net, sACN and P3.
- The setup, monitoring and control options available using the onboard control and display panel.
- Software service functions.

Warning! Before applying power to the fixture:

- ***Read the Safety Precautions chapter at the beginning of this manual.***
- ***Read “Connecting to AC mains power” on page 14.***
- ***Check that the installation is safe and secure.***
- ***Check that the base is fastened securely so that the torque reaction when the head moves will not cause the base to move.***
- ***Be prepared for the fixture to light up suddenly. Check that no-one is looking at the fixture from close range.***
- ***Be prepared for the head to move suddenly. Check that there will be no risk of collision with persons or objects.***
- ***In a hot or cold environment, check the temperature. Do not operate the fixture if the ambient temperature is below -10° C (14° F) or if it is below 5° C (41° F) and ice is forming on the fixture. Do not operate the fixture if the ambient temperature is above 40° C (104° F).***

The MAC Aura XIP does not have an On/Off switch. To apply power to the fixture, apply power to the power input cable. Neutrik powerCON TRUE1 TOP connectors also support hot-plugging.

Troubleshooting

Problem	Probable cause(s)	Remedy
One or more of the fixtures is completely dead.	No power to fixture.	Check that power is switched on and cables are plugged in.
	Fuse blown or internal fault.	Contact Martin Service or authorized service partner. Do not remove base or yoke covers, attempt to replace a fuse or carry out any repairs or service that are not described in this Safety and Installation Manual unless you have both authorization from Martin and official Martin service documentation.
Fixtures reset correctly but respond erratically or not at all to the controller.	Bad data link.	Inspect connections and cables. Correct poor connections. Repair or replace damaged cables.
	Data link not terminated.	Insert DMX termination plug in data output socket of the last MAC Aura XIP on the data link.
	Incorrect addressing of fixtures.	Check fixture address and protocol settings.
	One of the fixtures is defective and is disturbing data transmission on the link.	Unplug the data in and out connectors and connect them directly together, or insert a relay cable, to bypass one fixture at a time until normal operation is regained. Have the fixture serviced by a qualified technician. Power fixtures off and on again to see if a restart solves the issue.
Timeout error after fixture reset.	Effect requires mechanical adjustment.	Check fixture's stored error messages for more information. Contact Martin Service or authorized Martin service partner.
Mechanical effect loses position.	Mechanical train requires cleaning, adjustment, or lubrication.	Check fixture's stored error messages for more information. Contact Martin Service or authorized Martin service partner.
Light output cuts out intermittently.	Fixture is too hot.	Check fixture's stored error messages for more information. Allow fixture to cool. Clean fixture. Reduce ambient temperature.
Control panel display only operates when fixture is connected to AC mains power.	Onboard battery fully discharged.	Contact Martin Service for battery replacement.

Table 2: Troubleshooting

Compliance and legal

Approvals

This product has been tested and found to comply with the following standards:

- Global CB Certification/IECEE: IEC 60598-2-17 (IEC 60598-1)
- EU safety: EN 60598-2-17 (EN 60598-1), EN62493
- EU EMC: EN 55015, EN 55032, EN 61547, EN 55035, EN 61000-3-2, EN 61000-3-3
- US safety: UL1573
- US EMC: FCC Part 15 Class B
- Canadian safety: CSA C22.2 No. 166
- Canadian EMC: ICES-003 Class B; ICES-005 Class B
- Australia/NZ: RCM
- United Kingdom: UKCA

FCC Compliance

This equipment has been tested and found to comply with the limits for a Class B digital device, pursuant to part 15 of the FCC Rules. These limits are designed to provide reasonable protection against harmful interference when the equipment is operated in a commercial environment. This equipment generates, uses and can radiate radio frequency energy and, if not installed and used in accordance with the instructions, may cause harmful interference to radio communications. Operation of this equipment in a residential area is likely to cause harmful interference, in which case the user will be required to correct the interference at his own expense.

Supplier's Declaration of Conformity

Harman Professional, Inc. have issued an FCC Supplier's Declaration of Conformity for this product. The Declaration of Conformity is available for download from the MAC Aura XIP area of the Martin website at www.martin.com

Canadian Interference-Causing Equipment Regulations - *Règlement sur le Matériel Brouilleur du Canada*

This Class B digital apparatus meets all requirements of the Canadian Interference-Causing Equipment Regulations.
Cet appareil numérique de la classe B respecte toutes les exigences du Règlement sur le Matériel Brouilleur du Canada.

CAN ICES-003 (B) / NMB-003 (B); CAN ICES-005 (B) / NMB-005 (B)

EU Declaration of Conformity

An EU Declaration of Conformity covering this product is available for download from the MAC Aura XIP area of the Martin website at www.martin.com.

Hibernation Mode

'Hibernation mode' is intended as an option to reduce the consequences of having a product fully operational in dirty environments or in situations where noise level is crucial such as during live performances. The small reduction in energy consumption in Hibernation Mode is only a subordinate effect.

Intellectual Property Rights

Martin® MAC Aura XIP products are covered by one or more of these patents:

CN101430080; CN102713425; CNZL200810128720.0; CNZL200810128776.6; CNZL200810144668.8; CNZL201080025103.3; CNZL201180014884.0; CNZL201380004370.6; CZ17567; EP2058586; EP2113714; EP2117284; EP2136136; EP2326150; EP2443381; EP2536974; EP2550686; EP2828577; EP2881650; US6971770; US7,703,948; US7,789,543; US7,905,630; US7,942,535; US7,990,673; US7222997; US7498756; US8,449,141; US8,708,535; US8,770,762; US9217551; US9217559;

and/or one or more of these patent applications:

CN104696882; CN104698579; CN104976548; CN105402641; CN201410740291.8; CN201410742572; DKPA201700088; EP17167067.2; EP2091302; EP2881651; EP2881652; EP2881653; EP2927579; EP2995852; US2015/0285483; US20150159827; US20150159828; US20150159830; US20160069540; US20160102850;

and/or one or more other intellectual property rights, including one or more intellectual property rights listed on www.martin.com/ipr.

There are also patents pending in the USA, China and Europe.

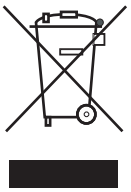

Disposing of this product

Martin products are supplied in compliance with Directive 2012/19/EC of the European Parliament and of the Council of the European Union on WEEE (Waste Electrical and Electronic Equipment), where applicable.

Help preserve the environment! Ensure that this product is recycled at the end of its life. Your supplier can give details of local arrangements for the disposal of Martin products.

The MAC Aura XIP contains a lithium battery. Ensure that the battery is disposed of correctly and responsibly by an authorized recycling or waste disposal center at the end of its life. Where applicable, Martin participates in schemes whose aim is to ensure that local recycling and/or waste disposal centers accept batteries from Martin products.

Martin®

www.martin.com