EXTERIOR LINEAR PRO COVE CTC

OUTDOOR LINEAR COVE FIXTURE WITH COLOR TEMPERATURE CONTROL

SPEC SHEET

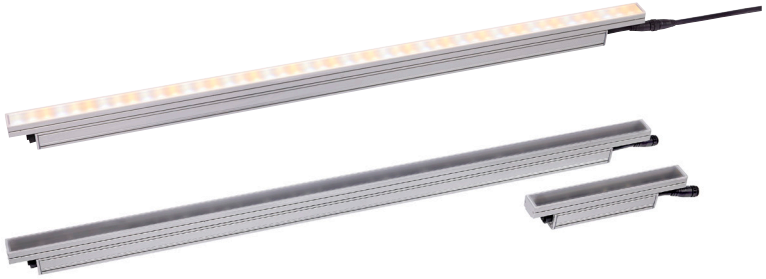

HIGHLIGHTS

- **Warm, neutral and cold white LED color temperature control**
- **Selectable segment modes**
- **Selectable power consumption and integrated multi-range power supply unit for long fixture runs**
- **Hybrid power and data connector for easy daisy-chained configurations**
- **Rugged IP66 housing designed for permanent outdoor installations**
- **Low weight - 0.8 kg/ft (1.9 lbs/ft)**
- **Compact design - 40mm (1.57 inch) width**

OVERVIEW

Martin Exterior Linear Pro Cove CTC outdoor fixtures are compact, LED-based architectural fixtures, available in 1 and 4 foot lengths making them easier to integrate into architectural elements. CTC Cove models feature color temperature control (2700K, 4000K, 6500K), a high color rendering index (CRI) and 12 LEDs/ft delivering robust outputs of 600 lm/ft. Delivering uniform light distribution at 100 degree beam angle, they are ideal for achieving striking, indirect lighting for coves and ceilings or any application for an even flood light is required.

KEY MESSAGES

EASE OF INSTALLATION

The slim design makes them easier to integrate into architectural elements discreetly and with less structural requirements. A smart mounting plate design allows for a variety of standard or custom bracket solutions.

SMART INFRASTRUCTURE

Fixtures are DMX-controllable and easy to install due to their integrated universal power supply. They can also be daisy-chained using a combined power and data connector, which enables long fixture runs for simpler infrastructures.

SUPERIOR COLOR TEMPERATURE CONTROL

Cold, neutral, and warm LEDs are included for precise color temperature control from 2700K to 6500K at high efficacy with 12 LEDs/ft. They also feature a high color rendering index (CRI) for accurate reproduction of colors.

EFFICIENT OPERATION

With more than 60 lm/W, Exterior Linear Pro CTC fixtures are highly efficient. Multiple power modes (12W/10W/5W, including ASHRAE compliance) can be set via Remote Device Management (RDM) to reduce power consumption as needed.

HARMAN PROFESSIONAL INC. • 8500 BALBOA BOULEVARD • NORTHRIDGE • CA 91329 • USA • +1 818 893 8411

©2026 HARMAN Professional. All rights reserved. Martin® is a registered trademark of HARMAN Professional Inc. registered in the United States and/or other countries.
Features, specifications, and appearance are subject to change without notice.

Version 20260910

EXTERIOR LINEAR PRO COVE CTC

OUTDOOR LINEAR COVE FIXTURE WITH COLOR TEMPERATURE CONTROL

SPEC SHEET

FEATURES

- Warm, neutral and cold white LED color temperature control (2700K, 4000K, 6500K) (12 LEDs/ft)
- 100° beam angle for indirect lighting applications
- Selectable segment modes (1, 4 or 8 segments)
- Selectable power consumption (12W/10W/5W) per foot
- Integrated multi-range power supply unit (PSU) 100-277V for long fixture runs
- Hybrid power and data connector for easy daisy-chained configurations
- DMX and RDM control
- Integrated magnetic switch for local diagnostics
- Rugged IP66 housing designed for permanent outdoor installations
- Low weight 0.8 kg/ft (1.9 lbs/ft)
- Compact design - 40mm (1.57 inch) width

Glare Shield 4FT

End Termination Cap PD

Power DMX Cable 10m

Power DMX Cable

ORDERING INFORMATION

- Exterior Linear Pro COVE CTC 1ft ..... P/N MAR-90570007
- Exterior Linear Pro COVE CTC 4ft ..... P/N MAR-90570009

RELATED ITEMS

- Martin Companion Cable ..... P/N MAR-91616091
- Martin Companion Cable (for firmware update over DMX): ..... Free download from www.martin.com

BEAM CONTROL:

- Glare shield, EL Pro 1ft set of 4 ..... P/N MAR-90570022
- Glare shield, EL Pro, 4ft set of 4 ..... P/N MAR-90570023

MOUNTING BRACKETS:

- Adjustable bracket EL Pro 10 pcs ..... P/N MAR-90570025
- Flange bracket EL Pro 10 pcs ..... P/N MAR-90570026
- Quick mount bracket EL Pro 10 pcs ..... P/N MAR-90570027

PRE-ASSEMBLED PD HYBRID POWER DMX CABLES:

- Power DMX Cable PD PD 0.2M EU ..... P/N MAR-91700004
- Power DMX Cable PD PD 1M EU ..... P/N MAR-91700005
- Power DMX Cable PD PD 2.5M EU ..... P/N MAR-91700006
- Power DMX Cable PD PD 5M EU ..... P/N MAR-91700007
- Power DMX Cable PD PD 10M EU ..... P/N MAR-91700008
- Power DMX Cable PD PD 0.2M US ..... P/N MAR-91700010
- Power DMX Cable PD PD 1M US ..... P/N MAR-91700011
- Power DMX Cable PD PD 2.5M US ..... P/N MAR-91700012
- Power DMX Cable PD PD 5M US ..... P/N MAR-91700013
- Power DMX Cable PD PD 10M US ..... P/N MAR-91700014

BULK HYBRID POWER DMX CABLES AND CONNECTORS:

- Power DMX Cable 100M Roll US ..... P/N MAR-91700016
- Power DMX Cable 100M Roll EU ..... P/N MAR-91700009
- Field installable connector PD female ..... P/N MAR-91700017
- Field installable connector PD male ..... P/N MAR-91700018

JUNCTION BOX, END TERMINATION CAP, MULTITOOL:

- End termination cap PD ..... P/N MAR-91700015
- Junction Box Power DMX to PD ..... P/N MAR-91700019
- Exterior Multitool ..... P/N MAR-90590025

HARMAN PROFESSIONAL INC. • 8500 BALBOA BOULEVARD • NORTHRIDGE • CA 91329 • USA • +1 818 893 8411

©2026 HARMAN Professional. All rights reserved. Martin® is a registered trademark of HARMAN Professional Inc. registered in the United States and/or other countries.
Features, specifications, and appearance are subject to change without notice.

Version 20260910

EXTERIOR LINEAR PRO COVE CTC

OUTDOOR LINEAR COVE FIXTURE WITH COLOR TEMPERATURE CONTROL

SPEC SHEET

TECHNICAL SPECIFICATIONS

DYNAMIC EFFECTS

Intensity	0 - 100%
Color temperature control	2700 K – 6500 K
Segment Control	0.5ft, 1 ft or full 4 ft fixture control

CONTROL AND PROGRAMMING

Control systems	DMX, RDM
Stand-alone control	Up to 20 scenes with individual fade/hold times
Control resolution	8-bit DMX individual color control
Dimmer resolution	16-bit DMX control of intensity
DMX channels 4ft	3/3/12/24 (standard/1 seg/4 seg/8 seg)
DMX channels 1ft	3/6/3 (standard/1 seg/2 seg)
User interface	Magnetic button to call up fixture status and test fixture
DMX compliance	USITT DMX512/1990
RDM compliance	ANSI/ESTA E1.20

OPTICS

Light source	White color (2700k, 4000K, 6500K) LED (12 LEDs per foot)
Minimum LED lifetime	50 000 hours (to >70% luminous output)*
Beam angle	100˚
Binning	Tight color and flux binning
Calibration	Full Gamut Color Calibration (1 step MacAdam ellipse)

**Figure obtained under manufacturer's test conditions*

PHOTOMETRICS

CRI (Color Rendering Index)	>70 (higher CRI available on request)
CCT	2700K - 6500K

Luminous output	1 FT at 12W	4 FT at 48W
2700K	540 lumens	2160 lumens
4000K	575 lumens	2300 lumens
6500K	600 lumens	2400 lumens

** All Photometric Data measured in steady state (30 minutes warm-up time) at 25˚C ambient.*

CONSTRUCTION

Housing	Aluminum
Finish	Clear anodized or optional colors on request
Front	Clear polycarbonate
Effective Projected Area (EPA)	0.04 m² per ft
Protection rating	IP66
IK rating	IK08
Corrosion resistance	C5 High (ISO 12944-6)
Vibration resistance	1.0g, Sinusoidal (IEC 60068-2-6), 0.7g RMS Random (IEC 60068-2-64), 3.0g (ANSI C136-31)

INSTALLATION

Orientation	Any
Minimum distance to illuminated surfaces	0.1 m / 0.3 ft.

ELECTRICAL

AC power	100-277 V AC nominal, 50/60 Hz
Power supply unit	Auto-ranging electronic switch mode
Typical half-cycle RMS inrush current at 230 V, 50 Hz	0.35 A
Typical earth-leakage current 1 ft	0.15 mA
Typical earth-leakage current 4 ft	0.21 mA
Power Factor 12 W / 10 W mode	0.95 @ 100 V / 120 V / 208 V / 230 V / 240 V , 0.90 @ 277 V
Power Factor 5 W mode	0.90 @ 100 V / 120 V / 208 V / 230 V / 240 V , 0.70 @ 277 V

Power Consumption 1 ft

Maximum	12 W / 10 W / 5 W *
Idle	1.54 W *

Power Consumption 4 ft

Maximum	48 W / 40 W / 20 W *
Idle	2.30 W *

** Measurements made at nominal voltage. Allow for a deviation of +/- 10%.*

Idle: steady state, all LEDs at zero intensity.

Power Consumption: Depending on power setting mode.

THERMAL

Cooling	Convection
Maximum ambient temperature	45˚ C (113˚ F)*
Minimum ambient temperature	-30˚ C (-22˚ F)
Total heat dissipation (calculated, +/- 10%)	41 BTU/hr. per foot

**Above this temperature, the fixture regulates output to protect from overheating*

APPROVALS

EU Safety	EN 60598-2-5 (EN 60598-1), EN 62471, EN 62493
EU EMC	EN 55015, EN 55032, EN55035, EN 61547, EN 61000-3-2, EN 61000-3-3
US Safety	ANSI/UL 1598
US EMC	47 CFR Part 15 Class B
Canadian Safety	CSA C22.2 No. 250.0
Australia/NZ	RCM
Global CB Certification/IECEE	IEC 60598-2-5 (IEC 60598-1)
India	BIS IS 10322(Part5/section5)
Korea	KS C 9832, KS C 9835

HARMAN PROFESSIONAL INC. • 8500 BALBOA BOULEVARD • NORTHRIDGE • CA 91329 • USA • +1 818 893 8411

©2026 HARMAN Professional. All rights reserved. Martin® is a registered trademark of HARMAN Professional Inc. registered in the United States and/or other countries.
Features, specifications, and appearance are subject to change without notice.

Version 20260910

EXTERIOR LINEAR PRO COVE CTC

OUTDOOR LINEAR COVE FIXTURE WITH COLOR TEMPERATURE CONTROL

SPEC SHEET

MOUNTING OPTIONS

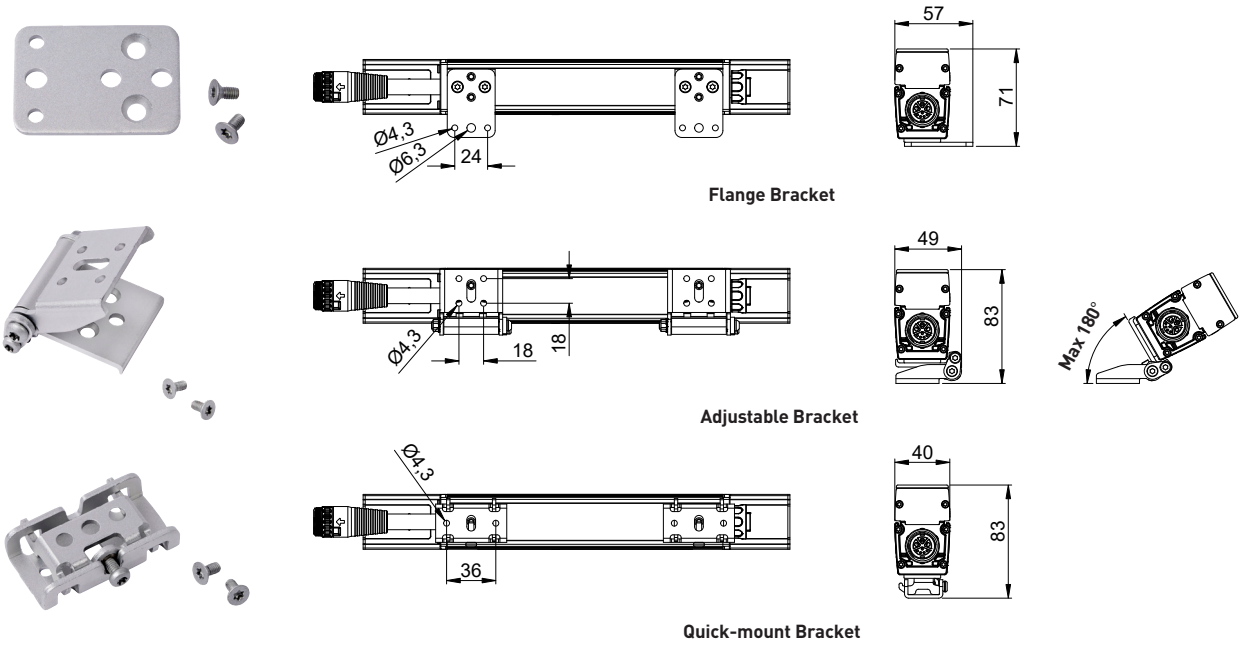

HARMAN PROFESSIONAL INC. • 8500 BALBOA BOULEVARD • NORTHRIDGE • CA 91329 • USA • +1 818 893 8411

©2026 HARMAN Professional. All rights reserved. Martin® is a registered trademark of HARMAN Professional Inc. registered in the United States and/or other countries.
Features, specifications, and appearance are subject to change without notice.

Version 20260910

EXTERIOR LINEAR PRO COVE CTC

OUTDOOR LINEAR COVE FIXTURE WITH COLOR TEMPERATURE CONTROL

SPEC SHEET

TECHNICAL SPECIFICATIONS

ENVIRONMENTAL

RoHS	Compliant
REACH	Compliant
WEEE	Compliant
Proposition 65	Compliant
FSC	Certified cardboard inlay and outer packaging

DIMENSIONS

PHYSICAL

Length - 1 ft Version	312mm (1 ft)
Length - 4 ft Version	1227mm (4 ft)
Width	40 mm (1.57 inch.)
Height	68 mm (2.67 inch)
Weight - 1 ft Version	0.85 kg (1.9 lbs)
Weight - 4 ft Version	2.8 kg (6.2 lbs)

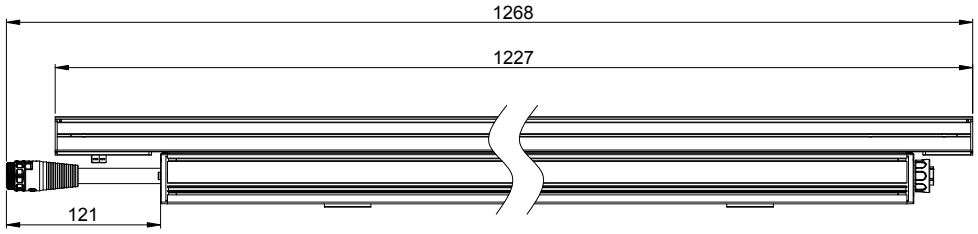

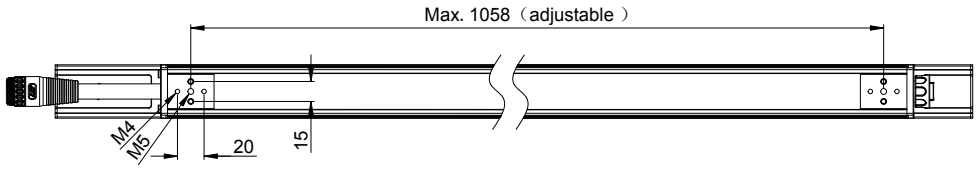

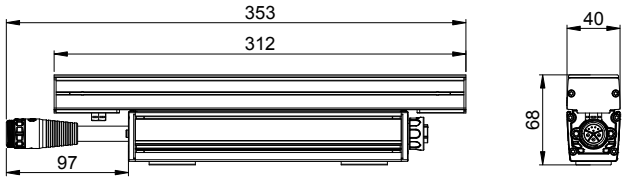

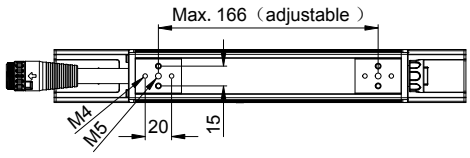

Brackets must be ordered separately

All measurements in mm

HARMAN PROFESSIONAL INC. • 8500 BALBOA BOULEVARD • NORTHRIDGE • CA 91329 • USA • +1 818 893 8411

©2026 HARMAN Professional. All rights reserved. Martin® is a registered trademark of HARMAN Professional Inc. registered in the United States and/or other countries.
Features, specifications, and appearance are subject to change without notice.

Version 20260910