MAC Aura™ PXL

User Manual

with Safety and Installation Manual

Martin®

User Documentation update information

Any important changes in the MAC Aura PXL User Manual are listed below.

Revision F

Covers MAC Aura PXL firmware version 1.6.xx.

User Manual updated. Added virtual dimmer enhancement to the fixture's FX. Fixture ID number is now improved and used as P3 address. No change in Safety Manual.

Revision E

Covers MAC Aura PXL firmware version 1.5.xx.

User Manual updated. Compact Direct DMX Mode added. No change in Safety Manual.

Revision D

Safety and Installation Manual updated. Fixture classified as Photobiological Safety Risk Group 3. No change in User Manual.

Revision C

Covers MAC Aura PXL firmware v. 1.3.0

Adds 'Aura in Compact Mode' setting.

Adds three RDM PIDs.

Adds Control Orientation Reference section (Pan, Tilt, Zoom directions) at end of manual.

Includes Safety and Installation Manual in one combined document.

Revision B

Covers MAC Aura PXL firmware version 1.2.0.

Adds Low-noise LED mode. Adds 12 new colors to virtual color wheel effect. Corrects various minor errors in RDM PIDs table. Firmware download now from within Martin Companion suite only.

Revision A

First version released. Covers MAC Aura PXL firmware version 1.0.0.

Also includes FX. These are available from firmware version 1.1.0 which is due for release in the fall/autumn of 2020.

©2020-2026 HARMAN PROFESSIONAL DENMARK ApS. All rights reserved. Features, specifications and appearance are subject to change without notice. HARMAN PROFESSIONAL DENMARK ApS and all affiliated companies disclaim liability for any injury, damage, direct or indirect loss, consequential or economic loss or any other loss occasioned by the use of, inability to use or reliance on the information contained in this document. Martin is a registered trademark of HARMAN PROFESSIONAL DENMARK ApS registered in the United States and/or other countries.

HARMAN PROFESSIONAL DENMARK ApS, Olof Palmes Alle 44, 8200 Aarhus N, Denmark
HARMAN PROFESSIONAL, INC., 8500 Balboa Blvd., Northridge CA 91325, USA

www.martin.com

MAC Aura PXL User Manual with Safety and Installation Manual (English), P/N 5129010-00, Revision F

Contents

Introduction . . . 4
Operating the fixture . . . 4
Data links . . . 5
Data via DMX cable . . . 5
Data via Ethernet cable . . . 6
Effects . . . 7
Effects control . . . 7
Effects overview . . . 9
Pre-programmed FX . . . 10
Control panel . . . 11
Control options . . . 13
DMX . . . 13
RDM . . . 14
P3 . . . 14
Fixture setup . . . 16
DMX address . . . 16
DMX control mode . . . 16
DMX universe . . . 16
IP address . . . 16
Subnet mask . . . 16
Fixture ID . . . 16
Personality . . . 16
Factory defaults . . . 18
Custom settings . . . 19
Fixture information readouts . . . 19
DMX signal monitoring . . . 19
Test sequences . . . 19
Manual control . . . 20
Service utilities . . . 20
Calibration . . . 20
Installing firmware . . . 21
Adjusting settings via DMX . . . 23
Resetting . . . 23
Illuminating the display . . . 23
Control menu setting overrides . . . 23
Changing calibration offsets using DMX . . . 24
RDM . . . 25
RDM UID . . . 25
RDM communication . . . 25
DMX protocol . . . 28
Compact DMX Mode . . . 28
Basic DMX Mode . . . 31
Extended DMX Mode . . . 34
Ludicrous DMX Mode . . . 36
Compact Direct DMX Mode . . . 37
FX: pre-programmed effects . . . 39
Control panel menus . . . 44
Service and display messages . . . 50
Warning messages . . . 50
Error messages . . . 51
Control orientation reference . . . 53
Pan and tilt control . . . 53
Zoom control . . . 54

Introduction

Warning! Before installing, operating or servicing the MAC Aura PXL lighting fixture, read the latest version of the Safety and Installation Manual that is attached to this User Manual, paying particular attention to the Safety Precautions section.

Thank you for selecting a MAC Aura PXL moving head lighting fixture from Martin®.

The MAC Aura PXL is a premium moving head wash light with a pixellated aura backlight effect and full pixel control with video mapping capabilities onto the beam, aura, or both.

Safety and Installation Manual – User Manual

The MAC Aura PXL Safety and Installation Manual is supplied with the fixture as a printed booklet and also attached to this User Manual as one combined PDF file that is available for download from the MAC Aura PXL area of the Martin® website at www.martin.com. The User Manual contains information that is mainly of interest for lighting designers and operators, whereas the Safety and Installation Manual contains important information for ALL users, especially installers and technicians.

We recommend that you check the Martin website regularly for updated manuals because we publish revised versions each time we can improve the quality of the information we provide and each time we release new firmware with changes or new features. Each time we revise a manual, we list any important changes on page 2 so that you can keep track of updates.

Operating the fixture

Before applying power to or operating the MAC Aura PXL:

- Read the ‘Safety Information’ section of the fixture’s Safety and Installation Manual that is supplied with the fixture and attached to this User Manual.
- Check that the installation is safe and secure.
- Check that the fixture is in perfect condition. Do not apply power to a fixture that is obviously damaged, or you may create a safety risk and make the damage worse.
- Check that the base is fastened securely so that the torque reaction when the head moves will not cause the base to move.
- Check that the head tilt lock is released.
- Be prepared for the fixture to light up suddenly. Check that no-one is looking at the fixture from close range.
- Be prepared for the head to move suddenly. Check that there will be no risk of collision with persons or objects.

The MAC Aura PXL does not have an On/Off switch. To apply power to the fixture, apply power to the power input cable.

Data links

Important! Shut down power to the fixture before connecting to or disconnecting from data.

Data via DMX cable

The MAC Aura PXL has 5-pin locking XLR sockets (see **A** in Figure 1) for DMX and RDM input and output via DMX cable. The default pin-out on both sockets is:

- pin 1 to shield
- pin 2 to data 1 cold (-)
- pin 3 to data 1 hot (+).

Pins 4 and 5 are not used by the fixture but are bridged between input and output sockets. These pins can therefore be used as a pass-through connection for an additional data signal if required.

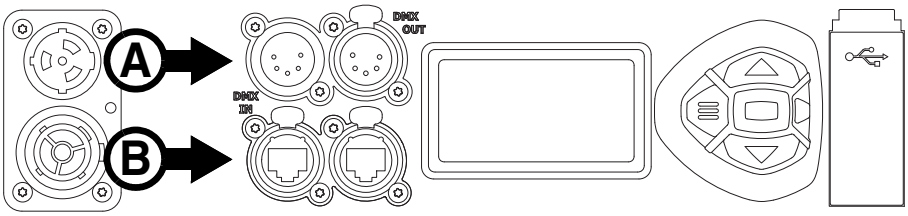

Figure 1: Data connections

Tips for reliable data transmission via DMX cable

- Use shielded twisted-pair high-quality DMX cable.
- 24 AWG cable is suitable for runs up to 300 meters (1000 ft). Heavier gauge cable and/or an amplifier is recommended for longer runs.
- Note that standard microphone cable cannot transmit control data reliably over long runs.
- To split the data link into branches, use an optically isolated splitter-amplifier.
- Do not overload the DMX data link. You can connect up to a maximum of 32 devices on a serial DMX link.
- Install a DMX termination plug on the last fixture on the link.

Connecting to data via DMX cable

To connect the MAC Aura PXL to DMX and/or RDM data carried over DMX cable:

1. Shut down power to the fixture.
2. Connect the DMX data output from the controller to the MAC Aura PXL's data input (male XLR) socket using good-quality DMX cable.
3. Run DMX cable from the MAC Aura PXL's data output (female XLR) socket to the data input of the next fixture and continue until the link is complete.
4. Terminate the data link by connecting a 120 Ohm, 0.25 Watt resistor between the data 1 hot (+) and cold (-) conductors at the data output of the last fixture on the link. If the link is divided into branches using a DMX splitter, terminate each branch of the link.
5. You can now apply power.

Data via Ethernet cable

The MAC Aura PXL has Neutrik etherCON data sockets (see **B** in Figure 1) that support DMX and RDM over Art-Net and sACN as well as Martin P3 video. Either socket can be used for input and the other socket used for throughput.

The etherCON data sockets have a fail-safe bypass feature. This means that the fixture will relay a data signal from the socket used for input to the socket used for throughput even if power to the fixture is shut down or lost.

Tips for reliable data transmission via Ethernet cable

- Use shielded twisted-pair Ethernet cable of type S/UTP, SF/UTP, S/STP or SF/STP only. The cable must be rated Cat 5e or better.
- The cable shield must be electrically connected to connector housings, and the other devices on the data link must also support shielded connections.
- Note that the MAC Aura PXL is compatible with 10/100 Mbit Ethernet only. Do not connect the fixture to a network port or device that is fixed to Gigabit Ethernet speed. If you need to integrate a MAC Aura PXL in a Gigabit Ethernet network, use a network switch to allow the link towards the fixture to operate at 100 Mbit/s Ethernet speed.
- To split the data link into branches, use a standard network switch that is able to operate at 100 Mbit/s towards the fixtures.
- Even though every fixture has a fail-safe bypass mechanism and minimal latency insertion, we recommend that you avoid connecting more than 50 devices in a single daisy-chain or branch.
- Unlike DMX cable, Ethernet cable does not require termination at the end of a daisy-chain of fixtures.

Connecting to data via Ethernet cable

To connect the MAC Aura PXL to Art-Net, sACN or P3 video via Ethernet cable:

1. Shut down power to the fixture.
2. Connect the Ethernet cable to either of the fixture's EtherCON data sockets.
3. Run Ethernet cable from the fixture's other EtherCON data socket to a data socket on the next fixture.
4. Continue connecting data sockets as described above until the link is complete.
5. You can now apply power.

Simultaneous DMX and P3 control

To control the MAC Aura PXL using DMX/Art-Net/sACN and P3 video at the same time, connect the DMX/Art-Net/sACN signal to the P3 System Controller. The P3 Controller will then merge DMX commands and video data together and send a combined data signal to fixtures over the Ethernet link using the P3 protocol.

Effects

This section gives details of the effects available in the MAC Aura PXL lighting fixture. See the DMX protocol tables starting on page 28 for details of the channels and commands used to control the effects via DMX.

Effects control

Where fine control is available, the main control channel sets the first 8 bits (the most significant byte or MSB), and the fine channels set the second 8 bits (the least significant byte or LSB) of the 16-bit control byte. In other words, the fine channel works within the position set by the coarse channel.

When the MAC Aura PXL is included in a Martin P3™ system, the fixture's 19 Beam pixels and 141 Aura pixels can be mapped to a video source (such as a media server) that is connected to the P3 system controller.

P3

The MAC Aura PXL is compliant with the Martin P3™ system controller family. If you add the fixture to a P3-driven installation, the P3 system controller will map the fixture's 19 Beam pixels and 141 Aura pixels individually regardless of which DMX mode the fixture is set to. This means that, even if the fixture is set to Compact or Basic DMX Modes, the video fed into the P3 system controller will be mapped onto every individual pixel in the fixture.

P3 control lets you match the color and intensity of MAC Aura PXL fixtures precisely and instantly with other P3-compatible lighting fixtures, creative LED elements or LED video panels in an installation.

Control protocol priority

The MAC Aura PXL auto-senses and responds correctly to whichever control protocol it is receiving: DMX and/or RDM via standard DMX cable, DMX and/or RDM via Art-Net or streaming ACN over Ethernet cable, or P3.

If the fixture is receiving both P3 data and DMX data, which can be either:

- via a combination of DMX cable for DMX and Ethernet cable for P3, or
- from a P3 system controller that is merging DMX and P3 data and sending it via Ethernet cable,

the P3 mix channels for the Beam (channel 18) and Aura (channel 32) let you determine which signal should take priority. You can also crossfade, which means that you can superimpose DMX data with variable opacity from 0% to 100% onto the P3 video output that is being displayed on the fixture's pixels.

Merging global and pixel-level color control

In Extended and Ludicrous mode, the color of the 19 beam pixels can be controlled by both the Beam global RGB control (channels 4 - 9) and the Beam pixel RGB controls (channel 33 - 89).

In Ludicrous mode, the color of the 141 Aura pixels can be controlled by both the Aura global RGB control (channels 27 - 29) and the Aura pixel RGB controls (channels 90 - 512).

Global color control is combined with pixel-level color control using HTP (highest takes precedence) logic. So, to control color on a global level, keep the pixel RGB channels at zero. And to control color pixel-by-pixel, keep the global RGB channels at zero. For more advanced looks it is also possible to use a mix of both control methods (for example: set background color with global RGB control and overlay pixel effects with pixel RGB controls).

Pixel mapping

See Figure 2. The MAC Aura PXL's 19 Beam pixels and 141 Aura pixels are numbered as shown.

Individual RGB control of each of the fixture's Beam pixels is available on channels 33 - 89 in Extended and Ludicrous DMX modes. Individual RGB control of each of the fixture's Aura pixels is available on channels 90 - 512 in Ludicrous DMX mode.

The 19 Beam pixels and 141 Aura pixels are always treated as individual pixels in a P3 system.

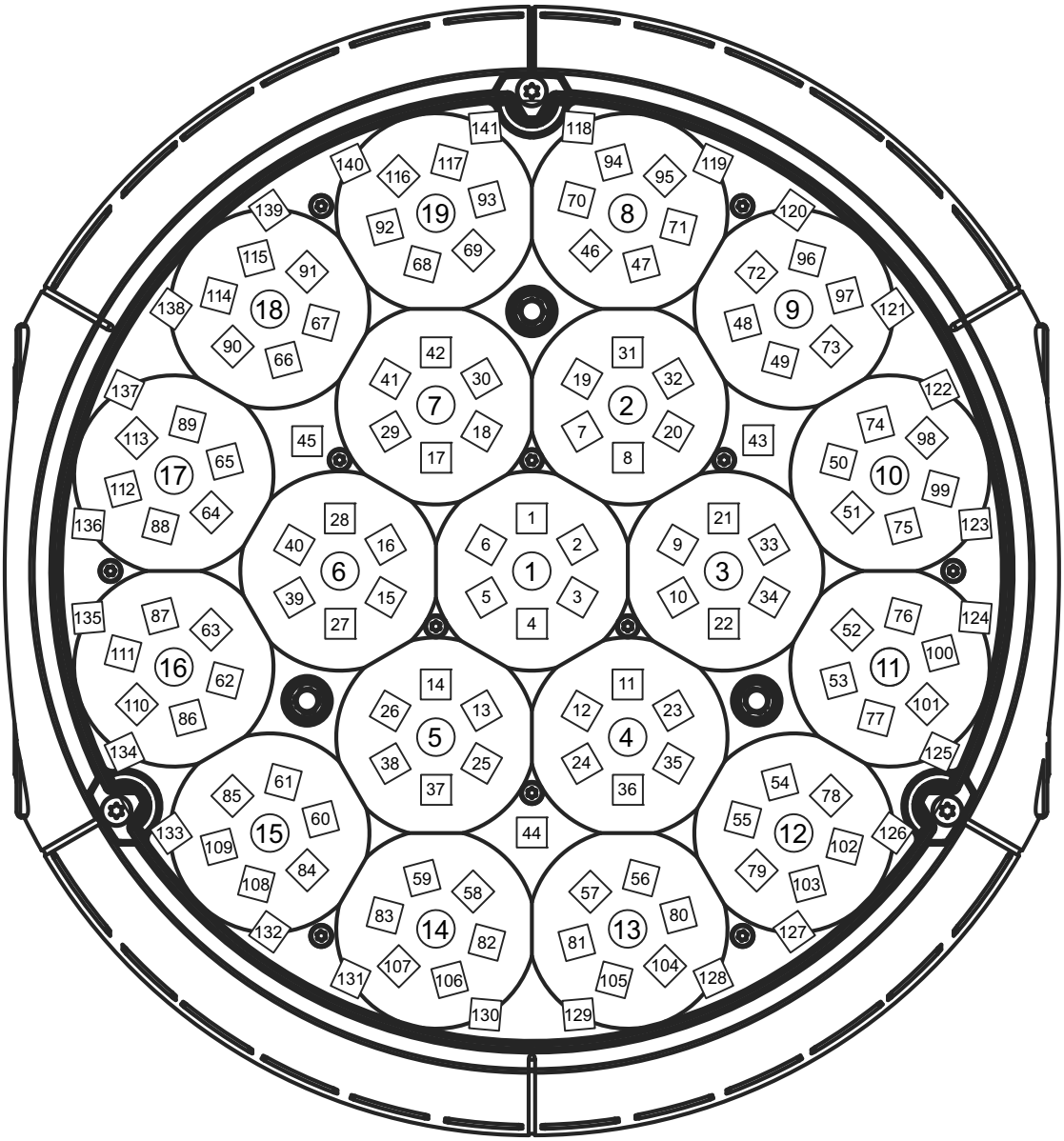

Fixture in hanging orientation, pan at 50%, and with display and connectors at back of fixture

Figure 2: Pixel layout

Effects overview

Shutter and strobe effects

The MAC Aura PXL's electronic shutter effect provides instant blackout and snap open as well as regular or random strobe effects with variable speed from approx. 1 Hz to approx. 20 Hz.

In Compact and Compact Direct DMX Modes, the strobe/shutter channel 1 is global – it controls both Beam and Aura. In Basic, Extended and Ludicrous DMX Modes, the strobe/shutter channel 1 controls the Beam only. A separate strobe/shutter effect for the Aura is available on channel 24.

Dimming

The fixture features smooth 0-100% global (Aura and Beam) dimming with 16-bit control resolution.

Four dimming curve options are available (see under "Personality" on page 16).

In Compact and Compact Direct DMX Modes, the 16-bit dimmer channels 2 and 3 are global – they control both Beam and Aura. In Basic, Extended and Ludicrous DMX Modes, channels 2 and 3 control the Beam only. Separate 16-bit dimming control of the Aura is available on channels 25 and 26.

Color mixing

In Compact DMX mode, the fixture offers 16-bit color mixing with RGB control on channels 4-9. White intensity on the Beam's RGBW LEDs is adjusted automatically to match RGB control input. Color mixing is global – it controls both the Beam and the Aura.

In Compact Direct DMX mode, the fixture offers 16-bit color mixing with direct RGBW control on channels 4-11. Color mixing is global – it controls both the Beam and the Aura.

In Basic, Extended and Ludicrous DMX Modes, the RGB color mixing channels 4 - 9 control the Beam only. White intensity on the Beam's RGBW LEDs is adjusted automatically to match RGB control input. Separate 8-bit RGB color mixing for the Aura is available on channels 27 - 29.

Color temperature control

Color temperature control is available on a dedicated CTC channel. You can adjust the fixture's color temperature from 2000 K to 10 000 K in 50 K steps.

In Compact DMX Mode, the CTC channel 10 is global – it controls both Beam and Aura. In Basic, Extended and Ludicrous DMX Modes, channel 10 controls the Beam only. Separate CTC control of the Aura is available on channel 30.

In Compact Direct DMX mode, color temperature control is not available because in this mode you have direct control of the RGBW emitters, bypassing color algorithms in the fixture.

Virtual color wheel

The MAC Aura PXL features a virtual color wheel effect that lets you select from 48 color presets. Most of the color presets are LEE-referenced, but the virtual color wheel also offers fully saturated colors which are very suitable for use as background colors for the fixture's pre-programmed FX. Colors are applied in full-color steps. Virtual color wheel scrolling lets you apply color presets sequentially with control of speed and color wheel direction. Color presets can also be applied in random order at fast, medium or slow speed.

In Compact DMX Mode, the virtual color wheel channel 11 is global – it controls both Beam and Aura. In Basic, Extended and Ludicrous DMX Modes, channel 11 controls the Beam only. A separate virtual color wheel for the Aura is available on channel 31.

The color wheel effect always takes priority over color mixing. If you want to use RGB color mixing, set the color wheel channel(s) to zero.

An exception to color wheel priority appears when Internal FX are being used. Some of the FX use both the color created by RGB color mixing and the color set by the virtual color wheel to create 2-color effects (RGB color mixing sets foreground color and the virtual color wheel sets background color).

Zoom

The MAC Aura PXL features a zoom lens system with a range of 1:8. This lets you vary the beam angle (half-peak) of the fixture from 6° - 40°. The field angle (one-tenth peak) varies from 7° to 59°.

Tungsten emulation

The tungsten lamp emulation option available on the Fixture Control / Settings channel gives the warm appearance and warm shift dimming characteristics of a tungsten lamp fixture.

Pan and tilt

16-bit pan and tilt control is available in all DMX modes.

Pre-programmed FX

The MAC Aura PXL offers two separately controllable effects engines. See “FX: pre-programmed effects” on page 39 for details of the effects available.

The built-in FX give instant access to complex dynamic effects with no need for programming at the controller.

Depending on how you set up DMX/P3 crossfading on the P3 channels (i.e. channels 18 for the Beam and 32 for the Aura), you can also superimpose FX over any P3 video that the fixture is displaying.

Virtual dimmer enhancer

When using virtual dimming on a lighting console on the Beam pixel RGB channels (channels 33-89 in Extended Mode and in Ludicrous Mode), or on the Aura pixel RGB channels (channels 90-512 in Ludicrous Mode), you may notice color shifts at the bottom end of the dimming range. This is caused by the fact that these RGB channels are only 8-bit and therefore do not offer enough resolution to maintain full color balance at that end of the dimming range.

This issue does not exist when you use the (real) 16-bit dimmers on DMX channels 2-3 for the Beam in all DMX modes and channels 25-26 for the Aura in Basic, Extended and Ludicrous DMX modes.

If you want to use virtual dimmers on your lighting console, you can improve the bottom end of the dimming range by activating the Virtual Dimmer Square Law FX macro using DMX channels 19 or 21 in Basic, Extended and Ludicrous Modes.

Control panel

You can configure individual fixture settings (such as the MAC Aura PXL's DMX address), read out data, execute service operations and view error messages using the fixture's backlit graphic display and control panel.

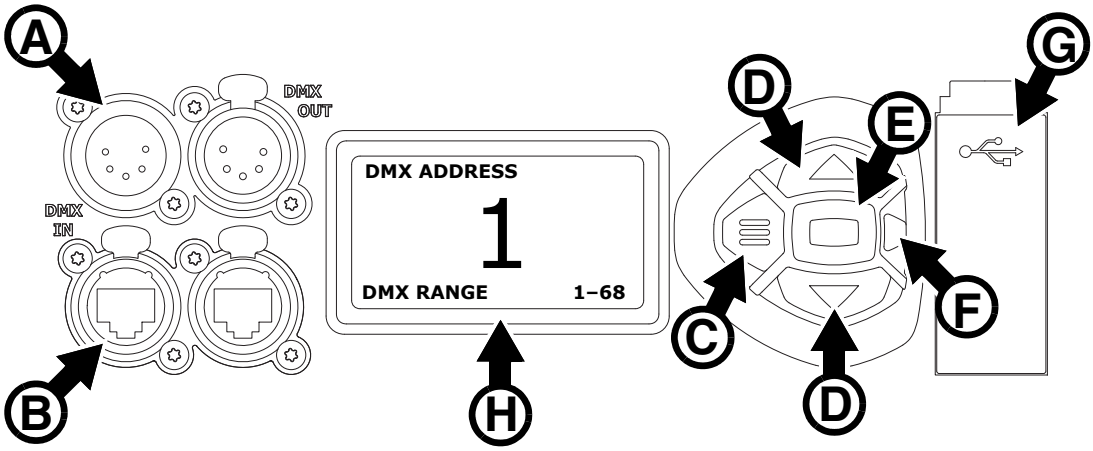

A - XLR connectors
B - EtherCON connectors
C - Menu
D - Up/Down
E- Enter
F - Status LED
G - USB port / battery compartment
H - LCD display

Figure 3: Display and control panel

When the MAC Aura PXL is powered on, it first boots and resets, then it displays its DMX address (or its fixture ID number, if one has been set) and any status messages (see page 50) in the display **H**.

The display can be set to automatically rotate to match standing or hanging fixture orientation in the **PERSONALITY** → **DISPLAY** menu or the Shortcuts menu (see "Shortcuts" on page 12).

Using the control panel

- Press the Menu button **C** or Enter button **E** to access the menus.
- Use the Up and Down buttons **D** to scroll up and down menus.
- Press the Enter button **E** to enter a menu or make a selection.
- The currently selected item in a menu is indicated by a star ✛.
- Press the Menu button **C** to step backwards through the menus.

Status LED

The LED **F** next to the control buttons indicates fixture status by showing a color and DMX status by flashing or lighting constantly:

- **GREEN**: All parameters normal.
- **AMBER**: Warning (service interval exceeded, for example).
  If **ERROR MODE** is set to **Normal**, the warning message will be shown in the display. If **ERROR MODE** is set to **Silent**, the display must be activated by pressing the Enter button C to display the warning message.
- **RED**: Error detected.
  If **ERROR MODE** is set to **Normal**, the error message will be shown in the display. If **ERROR MODE** is set to **Silent**, display the error message BY GOING TO NORMAL OR SERVICE - ERROR LIST.
- **FLASHING**: No DMX signal detected.
- **CONSTANT**: Valid DMX signal detected.

The status LED is only active when the display is active. If the display enters sleep mode, the LED will also sleep.

Battery power

The MAC Aura PXL's onboard battery gives access to the most important functions in the control panel when the fixture is not connected to AC power. The following functions are available on battery power:

- DMX address
- DMX control mode (Compact/Basic/Extended/Ludicrous)
- Fixture ID
- All personality settings (pan/tilt, cooling, fan clean mode, dimming curve, DMX reset, parameter shortcuts, all display settings, error mode)
- Default settings
- Information (Power On Hours and Power Cycles counters, Software version)
- Error list

To activate the display when the fixture is not connected to power, press the Menu button **C**. Press again to enter the menus. The display extinguishes after 10 seconds with no user input and the control panel is de-activated after 1 minute with no user input. Press the Menu button **C** again to re-activate.

Shortcuts

If you hold the Menu button **C** pressed in for 2 - 3 seconds, a shortcut menu with the most important commands appears. Select a command with the Up and Down buttons **D** and press the Enter button **E** to activate, or press the Menu button **C** again to cancel.

- **RESET ALL** resets the whole fixture
- **ROTATE DISPLAY** rotates the MAC Aura PXL display 180°.

Settings stored permanently

The following settings are stored permanently in the fixture memory and are not affected by powering the MAC Aura PXL off and on or by updating the fixture software:

- DMX address
- DMX control mode (Compact/Basic/Extended/Ludicrous)
- Fixture ID
- All personality settings (pan/tilt, cooling, dimming curve, DMX reset, parameter shortcuts, all display settings, error mode, etc.)
- Resettable counters
- Service settings (adjustment, calibration)

These settings can be returned to factory defaults using the control menus or via DMX.

Service mode

Holding the Menu and Enter buttons **C** and **E** both pressed in while powering the fixture on puts the fixture into service mode, in which pan and tilt are disabled and a **SERV** warning appears in the display. Service mode removes the risk of unexpected head movement during service adjustments.

Cycling power and allowing the fixture to start normally takes it out of service mode.

Control options

You can control the MAC Aura PXL using DMX and/or Martin P3 protocol. The fixture auto-senses the type of data that it is receiving and will respond correctly with no need for manual protocol selection.

The following options are available:

- DMX control over standard DMX cable connected to the fixture's 5-pin XLR connectors.
- DMX control using Art-Net over Ethernet cable connected to the fixture's etherCON connectors.
- DMX control using streaming ACN over Ethernet cable connected to the fixture's etherCON connectors.
- DMX control over DMX cable and P3 video data over Ethernet cable.
- P3 video data with embedded DMX commands over Ethernet cable. If you connect DMX / Art-Net / sACN to the P3 system controller, the controller can merge the DMX commands into the P3 signal and send them to the fixture over Ethernet.

You can decide how the fixture should behave if it receives both DMX data and P3 video data. The default setting is for DMX data to take priority, but you can set the fixture to give priority to P3 pixels and you can crossfade between DMX colors and P3 pixels.

Fail-safe connection

The MAC Aura PXL has a fail-safe network connection. If the fixture loses power or if you shut it down, it will continue to relay an Ethernet signal, and the Art-Net / sACN / P3 signal to the other networked fixtures in the daisy chain will not be interrupted.

Data rate

Any Ethernet switch used to relay Art-Net, streaming ACN or P3 data to the MAC Aura PXL must be capable of running at 10/100 Mbps speed, as the fixture does not support Gigabit Ethernet data rates.

DMX

The MAC Aura PXL accepts a DMX-512A data signal.

DMX setup

The DMX address, also known as the start channel, is the first channel used to receive instructions from the controller. For independent control, each fixture must be assigned its own control channels. If you give two MAC Aura PXL fixtures the same address, they will behave identically. Address sharing can be useful for diagnostic purposes and symmetrical control, particularly when combined with the inverse pan and tilt options.

DMX addressing is limited to make it impossible to set the DMX address so high that you are left without enough control channels for the fixture.

To set the fixture's DMX address:

1. Press Enter to open the main menu.
2. Press Enter to enter the **DMX ADDRESS** menu, then scroll to the desired address and press Enter to save.
3. Press Menu to exit.

DMX modes

The **CONTROL MODE** menu lets you set the MAC Aura PXL to one of the fixture's four DMX operating modes:

- **Compact Mode** controls all the fixture's pixels, Beam and Aura, together as one unit. It offers a strobe/shutter, 16-bit dimming control, 16-bit RGB control, CTC adjustment, a virtual color wheel, zoom

and 16-bit control of pan and tilt. It also includes a Fixture Control / Settings channel that lets you configure fixture settings over the DMX link.

- **Compact Direct Mode** (available from firmware 1.5.xx) includes all the functionality of Compact Mode, but with direct control over the white emitters added and color temperature and virtual color wheel removed.
- **Basic Mode** includes all the functionality of Compact Mode but it but it also offers a P3 Mix channel that allows you drive colors by DMX, P3 video pixels or a mix of both. It also gives you two separately controllable FX engines. FX can be synchronized across fixtures for identical behavior, or you can configure them with offsets in 10° steps which lets you run FX chases. Basic Mode also lets you control the Aura separately from the Beam, with a shutter/strobe, 16-bit dimming, RGB color mixing, CTC control, a virtual color wheel and P3 Mix.
- **Extended Mode** includes all the functionality of the previous modes but adds individual RGB control of each of the fixture's 19 Beam pixels. Figure 2 on page 8 shows how the Beam pixels are numbered. Extended Mode lets you patch virtual dimmers to individual Beam pixels.
- **Ludicrous Mode** includes all the functionality of the previous modes but adds individual RGB control of each of the fixture's 141 Aura pixels. Figure 2 on page 8 shows how the Aura pixels are numbered. Ludicrous Mode lets you patch virtual dimmers to individual Aura pixels.

To set the fixture's DMX mode:

1. Press Enter to enter the main menu.
2. Scroll to **CONTROL MODE**, then press Enter. Scroll to select either **COMPACT, BASIC**, **EXTENDED, LUDICROUS** or **COMPACT DIRECT**, then press Enter to confirm.
3. Press Menu to exit.

Note that a P3 controller connected to the MAC Aura PXL will always treat the fixture as 160 individual pixels even if the fixture is in Basic or Extended DMX mode.

Art-Net and streaming ACN setup

The MAC Aura PXL automatically assigns itself an IP address when connected to Art-Net and sACN, as provided for in the Art-Net and sACN standards. Manually assigning IP addresses is not necessary but you can do this using the control panel if needed for a specific network configuration.

In the **DMX SETUP** menu in the control panel, you can allocate the fixture to a DMX universe for DMX control via Art-Net or sACN.

Using the **ETHERNET SETUP** menu in the control panel, you can display the fixture's current IP address and subnet mask or assign new ones by entering them manually. You can also display the fixture's MAC address.

RDM

The MAC Aura PXL can communicate over standard DMX cable and over Art-Net and sACN Ethernet links using RDM (Remote Device Management) in accordance with ESTA's *American National Standard E1.20-2006*. See "RDM" on page 25 for information on using RDM.

P3

The MAC Aura PXL accepts video pixel control using Martin's proprietary P3 protocol that has been a well-established standard in the industry for over 10 years. It lets you send a video signal from a media server or other video source to P3-compliant video display devices and LED lighting fixtures over Ethernet cable using Martin's reliable P3 data protocol.

The intuitive graphic user interface in Martin P3 controllers lets you visualize and set up a custom installation that can contain a huge number of display devices in any kind of physical arrangement within a few minutes. Device identification is automatic. You can arrange devices on the monitor using drag-and-drop. System latency is often zero and typically < 1 ms. If you use P3 you do not need to worry about IP addresses, as P3 does not use IP addresses or communication.

The MAC Aura PXL's 19 Beam and 141 Aura pixels will always be treated as individual pixels in by a P3 video system controller, regardless of which DMX mode the fixture is set to.

If both video from a media server (or other source) and DMX, Art-Net or sACN data from a lighting console are sent into the P3 System Controller, the P3 System Controller will merge these together and send them to the fixtures over one single network, avoiding the need to run two data cables.

If you use a P3 System Controller, it is also no longer necessary to use the control panels on fixtures, as the P3 System Controller will configure all DMX modes, start addresses, universes and other settings remotely. This feature lets you address tens or hundreds of fixtures in a matter of seconds without needing to access the control panel of each fixture.

A P3 System Controller will also monitor all fixtures for warnings and errors, letting you manage the installation remotely from one central location.

Fixture setup

The onboard control panel (see “Control panel” on page 11) and the Control / settings DMX channel let you configure the fixture via a range of fixture settings.

DMX address

The fixture lets you set its DMX address or DMX start channel from 001 to the highest number available in one 512-channel DMX universe that let you operate the fixture completely. This depends on the fixture’s DMX footprint in the DMX mode that it is currently set to.

DMX control mode

You can set the fixture to Compact, Basic, Extended, Ludicrous or Compact Direct DMX modes to match the control options that you would like to use and the number of DMX channels that you have available for the fixture. See “DMX protocol” on page 28 for details of these modes.

DMX universe

You can set the fixture to use the DMX channels in one DMX universe numbered from 1 - 63 999.

IP address

When sending control data to the fixture using its Ethernet connectivity, you can either:

- use the default IP address (which is displayed as soon as you open the **IP ADDRESS** menu), or
- manually set the fixture’s IP address.

Subnet mask

As with the fixture’s IP address, when operating in a networked installation you can either:

- use the default Subnet mask (which is displayed as soon as you open the **SUBNET MASK** menu), or
- manually set the fixture’s Subnet mask.

Fixture ID

The Fixture ID is a number in the range 1-65535 which can be set freely by the user. It can help you easily identify a fixture in an installation if you set Fixture IDs in line with how fixtures are numbered on the lighting console. The Fixture ID is also used by Martin P3 System Controllers to link fixtures on the P3 workspace with actual fixtures in the rig.

Personality

The MAC Aura PXL provides several options that let you optimize the fixture for different applications in the **PERSONALITY** menu:

- The **PAN/TILT** menu lets you swap and/or invert pan and tilt. It also lets you set minimum and maximum limits for pan and tilt.
- The **SPEED** menu lets you set **PAN/TILT** to **FAST** (optimized for speed) or **SMOOTH** (optimized for smooth movement – useful for slow movements in long-throw applications). Likewise, you can select an

overall speed for all the effects by setting **EFFECT** speed to **FAST** or **SMOOTH**. You can also set effect speed to **FOLLOW P/T**, in which effects will always use whatever speed is set for pan and tilt.

- **DIMMER CURVE** provides four dimming options (see Figure 4):

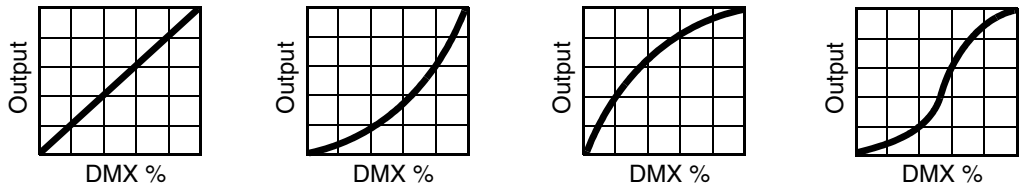

Linear **Square law** **Inverse square law** **S-curve**

Figure 4: Dimming curve options

  - **LINEAR** – (optically linear) the increase in light intensity appears to be linear as DMX value is increased.
  - **S-CURVE** – light intensity control is finer at low levels and high levels and coarser at medium levels. This curve emulates the RMS voltage dimming characteristics of an incandescent lamp such as the tungsten halogen lamp of the Martin™ MAC TW1™.
  - **SQUARE LAW** – light intensity control is finer at low levels and coarser at high levels.
  - **INV SQUARE LAW** – light intensity control is coarser at low levels and finer at high levels.
- **TUNGSTEN EMULATOR** lets you choose to have the look and feel of a tungsten lamp. Color temperature and dimming characteristics emulate tungsten lamp behavior, with a shift towards warmer white when you dim the fixture down.
- **COLOR MODE** offers two options that affect color saturation and evenness between fixtures:
  - **Extended Color** mode optimizes LED deployment for color saturation and gets the deepest color saturation possible from the LEDs. The white color point is calibrated and even across different fixtures, but as the fixture approaches full color saturation there can be very small differences in color rendition between different fixtures.
  - **Calibrated Color** mode optimizes LED deployment for even color rendition between fixtures. All fixtures display identical color from white point to full color saturation, and maximum color saturation levels are limited slightly to ensure this.
- **VIDEO TRACKING** optimizes performance if the MAC Aura PXL is used with a video source.
  In normal use, the fixture processes the signal it receives, tracking (or smoothing out) changes in values in order to ensure smooth fading between colors and/or intensities. This signal processing takes fractions of a second and is normally invisible, but if the fixture is used to display video the processing can interfere with video response times. If you enable video tracking, the fixture does not ‘smooth out’ input but instead snaps instantly when a value changes.

  For best results, we recommend that you enable video tracking during P3 video display and disable it (the default setting) during DMX control.
- **DMX RESET** defines whether the fixture or individual effects can be reset by sending a DMX command on the fixture settings channel. Setting it to OFF can help you avoid accidentally sending a Reset command during a show, for example.
- **EFFECT SHORTCUT** determines whether the effects take the shortest path between two positions (shortcuts enabled) or not (shortcuts disabled). If shortcuts are enabled, the virtual color wheel effect can go through a virtual open position during changes from one color to another just as a mechanical color wheel would.
- **COOLING MODE** lets you select between five cooling fan options depending on whether your priority is highest light output or quietest cooling fan operation:
  - **CONSTANT FAN FULL** optimizes cooling fan operation for the lowest possible temperature by setting cooling fans to run constantly at full speed. Light output intensity is kept at its maximum, as the LEDs operate at the coolest temperature possible.
  - **CONSTANT FAN MEDIUM** sets cooling fans to run constantly at medium speed. Light output intensity is reduced if necessary to prevent the fixture from exceeding its maximum operating temperature during medium speed fan operation.
  - **CONSTANT FAN LOW** sets cooling fans to run constantly at low speed. Light output intensity is reduced if necessary to prevent the fixture from exceeding its maximum operating temperature during low speed fan operation.

- **CONSTANT FAN ULOW** (ULTRALOW) optimizes cooling fan operation for the lowest possible noise by setting cooling fans to run constantly at ultra-low speed. Light output intensity is reduced if necessary to prevent the fixture from exceeding its maximum operating temperature during ultra-low speed fan operation.
- **REGULATED FANS** adjusts cooling fan operation to balance the fixture's noise and light output characteristics. Cooling fans are set to the lowest speed possible and then increased as fixture operating temperature rises. If the fixture reaches maximum operating temperature and full-speed fan operation is not enough to control fixture temperature, light output intensity is limited to keep the fixture within its operating temperature range.

Because the MAC Aura PXL adjusts the maximum possible output intensity level as a function of fixture temperature, the choice of cooling mode will affect the maximum intensity level available. The exact level will vary depending on factors such as ambient temperature, airflow in the installation etc., but to give an approximate indication, you can expect to obtain the following intensity levels in the fixture's different cooling modes relative to the CONSTANT FAN REGULATED mode:

- CONSTANT FAN FULL: 103%
- CONSTANT FAN MEDIUM: 101%
- CONSTANT FAN LOW: 74%
- CONSTANT FAN ULOW: 29%
- REGULATED FANS: 100%

- **LOW NOISE LED MODE** offers two options to balance dimming smoothness and the possibility of high frequency noise:
  - With **LOW NOISE LED MODE** disabled (default) the fixture will offer the best dimming performance, particularly at very low intensity levels. However, in a silent or very quiet environment some minor high frequency noise may be heard from the electronics of the fixture.
  - With **LOW NOISE LED MODE** enabled this high frequency noise will be removed entirely, but the fixture will offer slightly reduced dimming smoothness. Any loss of smoothness will typically only be visible at very low intensity levels.

  You can enable or disable **LOW NOISE LED MODE** using the fixture's integrated control panel, via the Control and Settings DMX channel, via RDM or via a P3 System Controller.
- **DISPLAY** offers the following options for the LCD display:
  - **DISPLAY SLEEP** determines whether the display remains on permanently, or goes into sleep mode 2, 5 or 10 minutes after the last time a control panel button is pressed.
  - **DISPLAY INTENSITY** lets you define the brightness of the display backlighting. Select **Auto** for automatic adjustment to match the ambient light level, or manually set the intensity to a level from 0% to 100%.
  - **DISPLAY ROTATION** lets you rotate the display manually through 180° so that it can be read easily no matter how the fixture is oriented. If set to **Auto**, the MAC Aura PXL senses its orientation and rotates the display automatically.
  - **DISPLAY CONTRAST** lets you define the contrast of the backlit graphic display. Select **Auto** for automatic adjustment to match display intensity, or manually set the contrast to a level from 0% to 100%.
- **ERROR MODE** enables or disables error warnings. If set to **NORMAL**, the display is activated and lights up if the fixture needs to report an error. If set to **SILENT**, the fixture does not light the display with error warnings but error messages can still be read when the display is activated manually. In both **NORMAL** and **SILENT** modes, the status LED lights amber to indicate a warning and red to indicate an error.
- **HIBERNATION MODE** sets light output intensity to zero and disables effect deployment and pan/tilt movement. The main purpose of the mode is to protect the fixture from the intake of airborne material such as dust and confetti and to provide an option for situations where noise is critical. The small reduction in power consumption obtained in Hibernation Mode is a by-product.
  When you bring the fixture out of hibernation mode, it performs a full reset.
- **AURA IN COMPACT MODE** lets you activate or deactivate the Aura pixels when you are controlling the fixture in Compact or Compact Direct DMX mode.

Factory defaults

FACTORY DEFAULT lets you reload the fixture's factory default settings. Effect calibration settings are not affected, so any changes you have made to zoom, pan and tilt offsets will be kept.

Custom settings

The custom configuration function CUSTOM 1 - CUSTOM 3 allows you to save and recall up to three sets of fixture settings. The savable settings comprise:

- all the settings in the PERSONALITY menu,
- the fixture's DMX address, and
- the fixture's DMX control mode: Compact, Basic, Extended or Ludicrous.

Fixture information readouts

The following fixture information can be called up in the display:

- **POWER ON TIME** provides two counters:
  - The **TOTAL** counter is not user-resettable and displays total hours powered on since manufacture.
  - The **RESETTABLE** counter is user-resettable and displays the number of hours the fixture has been powered on since the counter was last reset.
- **POWER ON CYCLES** also provides two counters:
  - The **TOTAL** counter is not user-resettable and displays the total number of power on/off cycles since manufacture.
  - The **RESETTABLE** counter is user-resettable and displays the number of power on/off cycles since the counter was last reset.
- **SW VERSION** displays the currently installed firmware (fixture software) version.
- **RDM UID** displays the fixture's factory-set unique ID for identification in RDM systems.
- **FAN SPEEDS** provides separate status readouts from the fixture's cooling fans.
- **TEMPERATURES** provides separate PCB temperature readouts. You can choose to see the current readout or the minimum and maximum temperature levels since the fixture was last powered on.

DMX signal monitoring

The MAC Aura PXL provides data on the DMX signal it is receiving in the **DMX LIVE** menu. This information can be useful for troubleshooting control problems.

- **RATE** displays the DMX refresh rate in packets per second. Values lower than 10 or higher than 44 may result in erratic performance, especially when using tracking control.
- **QUALITY** displays the quality of the received DMX data as a percentage of usable packets from the data received. Values much below 100 indicate interference, poor connections, or other problems with the serial data link that are the most common cause of control problems.
- **START CODE** displays the DMX start code. Packets with a start code other than 0 may cause irregular performance.

The remaining options under **DMX LIVE** display the DMX values in a range from 0 - 255 that are being received on each channel. The DMX channels displayed depend on whether the fixture is in Compact, Basic, Extended or Ludicrous DMX mode.

Test sequences

The **TEST** menu lets you test all the fixture's effects, test LED effects only, test mechanical effects only or test pan and tilt only. If you are going to run a test, be prepared for the head to move without warning and be prepared for the fixture to light up suddenly.

To run a test:

- In the TEST menu, scroll to TEST ALL, TEST LEDS, TEST EFFECTS or TEST PAN/TILT and press Enter.
- Scroll to the item you want to test and press Enter to start a test sequence for that item.
- Press Menu to stop the test sequence.

Manual control

The **MANUAL CONTROL** menu lets you reset the MAC Aura PXL and operate the fixture without a DMX controller. To execute commands in the **MANUAL CONTROL** menu, select a menu item for the effect that you want to control, then enter a value from 0 to 255 to apply a command. The menu items and values correspond to the commands listed in the DMX protocol on page 28.

Service utilities

The control panel **SERVICE** menu provides utilities for technicians rigging or servicing the fixture:

- **ERROR LIST** displays any error messages that are stored in internal memory.
- **FAN CLEAN** lets you set all cooling fans to run at maximum speed for short periods for cleaning purposes.
- **PT FEEDBACK** lets you disable feedback to the fixture software from the pan, tilt and effects positioning systems. If feedback is set to **ON** and a pan, tilt or effect position error is detected, the shutter closes and the effect resets. This feature can be disabled by setting feedback to **OFF**.
  The **OFF** setting is not saved when the fixture is powered off, and the system will be re-enabled the next time the fixture starts. If a pan/tilt position error occurs and the system cannot correct pan/tilt position within 10 seconds, feedback is automatically disabled.
- **ADJUST** lets you set the pan and tilt home positions in the unlikely event that the fixture loses pan and tilt adjustment. Adjustment may also be required by some firmware updates. If so, this will be mentioned in the firmware release notes.
- **CALIBRATION** lets you set new default positions for calibration purposes, set effects to their factory default positions or overwrite the factory default positions with new values. See ”Calibration” below.
- **USB** lets you updates the firmware (fixture software) using a USB memory device. For a detailed guide to updating the firmware, see ”Installing using a USB memory device” later in this chapter.

Calibration

Martin fixtures are adjusted and calibrated at the factory, and further calibration should only be necessary if fixtures have been subjected to abnormal shocks during transport or if normal wear and tear has affected alignment after an extended period of use. You can also use calibration to fine-tune fixtures for a particular location or application.

The **CALIBRATION** menu lets you define offsets in the fixture software to adjust the positions of pan, tilt and effects relative to the DMX values the fixture receives. This allows you to fine-tune fixtures and achieve uniform behavior in different fixtures.

Calibration can be carried out using the fixture’s onboard control panel and via DMX (see ”Changing calibration offsets using DMX” on page 24).

A recommended procedure is to set pan, tilt and effects to the same DMX values in multiple fixtures and then calibrate each fixture using its onboard control panel while comparing its light output with a reference fixture. The calibration range available for each effect varies. Calibration values are expressed as percentages. After selecting a value, press Enter to set the effect to that value.

Loading and storing default calibration offsets

In the **SERVICE** → **CALIBRATION** menu, **LOAD DEFAULTS** lets you erase the calibration offsets that you have defined and reload the default calibration offsets that are stored in memory**.**

SERVICE → **CALIBRATION** → **SAVE DEFAULTS** lets you overwrite the factory default calibration offsets that are stored in memory with any new offsets that you have defined. Overwriting is permanent, so once you have saved new default offsets, **LOAD DEFAULTS** will load the new defaults, not the original factory defaults.

Installing firmware

You can check the currently installed firmware (fixture software) version in the **INFORMATION** menu in the MAC Aura PXL's control panel.

Firmware updates are available from the Martin website and can be downloaded automatically from within the Martin Companion software suite on a PC connected to the Internet. You can install firmware updates using one of the following methods:

- A USB memory device inserted into the USB port beside the control panel.
- A Windows PC running the Martin Companion application with a Martin Companion Cable USB/DMX hardware interface connected to the DMX link.
- A Martin P3 system controller connected to the fixture via the Ethernet cable.

Calibration data is stored in the relevant modules wherever possible so that a module will stay calibrated if is removed from the fixture or installed in another fixture.

Important! Do not switch the fixture off or disconnect the source of the firmware during an update, or the firmware will be corrupted.

Installing using a USB memory device

The following are required in order to install firmware using a USB memory device:

- The MAC Aura PXL '.BANK' firmware update file, available for automatic download from within the Martin Companion software suite running on a PC connected to the Internet.
- A USB memory stick or other USB memory device with the update file copied from a PC into the USB stick's root directory.

To install the MAC Aura PXL firmware:

1. Download the '.BANK' firmware file from within the Martin Companion Application and press **Download USB Stick FIrmware...**
2. Read the firmware release notes carefully to check for any instructions or warnings, and copy the firmware file to the root directory of a USB stick.
3. Disconnect the data link from the MAC Aura PXL.
4. Insert the USB stick into the MAC Aura PXL's USB host socket. The fixture should recognize the USB stick and illuminate the display. If the fixture does not recognize the USB stick, navigate to **SERVICE** → **USB** in the control panel.
5. **AVAILABLE FIRMWARE** will appear in the display. You can now scroll through the firmware versions available.
6. To install a firmware version, select it and press Enter. The MAC Aura PXL asks you to confirm installation of the new firmware. Press Enter to confirm and press Menu to exit without confirming.
7. Allow the fixture to install the firmware and reboot. Do not remove the USB stick until the fixture has successfully rebooted.
8. Remove the USB stick. The newly-installed firmware version will now be displayed in the **INFORMATION** menu.
9. Reconnect the data link.
10. If you have installed a new firmware version, check the MAC Aura PXL area of www.martin.com to see whether an updated version of this User Manual is available for the new firmware.

Fixture information and settings are not affected when you upload new firmware to the fixture.

Installing using a PC running Martin Companion

The following are required in order to install firmware using a PC:

- A Windows PC running the latest version of the Martin Companion software suite (available for download free of charge from the Martin website at www.martin.com).
- The MAC Aura PXL firmware file, which the Martin Companion application will download automatically when you run Martin Companion on a PC with an Internet connection.
- The Martin Companion Cable USB-DMX hardware interface, available from your Martin supplier by ordering P/N 91616091.

To install the MAC Aura PXL firmware:

1. Connect your PC to the Internet and launch the Martin Companion application. The application will automatically download the latest Martin fixture firmware from the Martin cloud.
2. Read the firmware release notes carefully to check for any instructions or warnings.
3. Connect the Martin Companion Cable hardware interface to your PC and to the DMX link. Any fixtures on the DMX link that are powered on will automatically recognize that Martin Companion has been connected.
4. Carry out a firmware upload from within the Martin Companion application (see the application's help files if necessary). Do not disconnect the Martin Companion cable until the upload is complete.

Installing from a P3 controller

To install firmware in the MAC Aura PXL from a Martin P3 controller, you must first download the latest MAC Aura PXL firmware file automatically from the Martin cloud using the Martin Companion application running on a PC connected to the Internet. You must then import the firmware into the P3 controller. Once imported, you can use the P3 controller to upload the firmware to all the fixtures on the network that are powered on.

When you import new firmware into a P3 controller, it will automatically recognize old firmware in fixtures and suggest a firmware update.

When carrying out firmware updates, the P3 controller must be connected to fixtures via Ethernet cable as normal. Updating the firmware is a fairly intuitive process using the commands available in the controller interface. Any fixtures that are powered on will recognize that the P3 controller is offering a firmware update and prepare to receive the firmware.

Adjusting settings via DMX

Certain fixture settings and parameters can be adjusted from the DMX controller on the Fixture Control / Settings channel.

Commands sent on this channel override any settings entered in the fixture's onboard control menus.

To help you avoid accidentally applying a setting that may disrupt a light show, for example, most of the commands must be held for a certain time before they are applied. For example, the command that turns off the display illumination must be held for one second to activate it. The command that resets the fixture must be held for five seconds to activate it. The times required to apply DMX commands on the Fixture control/settings channel are listed for each command on page 29 in the DMX protocol.

Resetting

Either the entire fixture or individual effects can be reset to their initial positions. Resetting individual effects can allow on-the-fly recovery if an effect loses its correct position, for example, without having to reset the entire fixture.

Illuminating the display

The fixture's display panel can be brought out of sleep mode with a DMX command. This makes it possible to read the fixture's DMX address while the fixture is installed in the rig.

After being illuminated in this way, the display will return to sleep mode according to the setting entered in the onboard control menus.

Control menu setting overrides

The following fixture settings can be adjusted via DMX, overriding the settings entered in the onboard control menus. See under "Control panel menus" on page 44 for details of these settings.

- Dimming curve
- Pan and tilt speed
- Parameter shortcuts
- Video tracking
- Color mode
- Fan speed
- Low-noise LED mode
- Pan/tilt and zoom calibration offsets
- Control panel display on/sleep mode
- Hibernation mode
- Pan/tilt range limits
- Tungsten emulation
- Compact Mode Aura

Changing calibration offsets using DMX

The Fixture control/settings DMX channel allows pan, tilt and zoom to be calibrated by changing their factory default offsets IN PERCENT from the DMX controller.

To set an effect offset:

1. Set the effect you want to calibrate to a specific value via DMX (for example, set all the fixtures in a group to DMX value 200 on the zoom channel).
2. Select ‘Enable calibration’ on the Fixture control/settings channel and hold for 5 seconds to activate.
3. The DMX control channels for pan, tilt and zoom now adjust the calibration offsets for those effects. Adjust each offset until the effect is in the required position (for example, adjust the zoom offset on each fixture in the group until the beam angle on all fixtures is identical – this is the position you will obtain when you send DMX value 200).
4. Send a ‘Store ...’ command for the effect on the Fixture control/settings channel and hold for 5 seconds to activate. Calibration offsets are now stored in memory and normal DMX control is restored.

Calibration offsets that are stored in memory are not affected by powering the fixture off and on or by updating the fixture software.

You can reset all calibration offsets to their default values by sending a DMX value on the Fixture control/settings channel. You must hold the value for 5 seconds. The fixture will return to factory default calibration values. If you have overwritten the factory default values by applying a CALIBRATION → SAVE DEFAULTS command in the SERVICE menu, the fixture will return to the last default calibration values that were saved).

RDM

The MAC Aura PXL can communicate using RDM (Remote Device Management) in accordance with ESTA's *American National Standard E1.20-2006: Entertainment Technology RDM Remote Device Management Over DMX512 Networks*.

RDM is a bi-directional communications protocol for use in DMX512 control systems, it is the open standard for DMX512 device configuration and status monitoring.

The RDM protocol allows data packets to be inserted into a DMX512 data stream without affecting existing non-RDM equipment. It allows a console or dedicated RDM controller to send commands to and receive messages from specific fixtures.

RDM UID

Each MAC Aura PXL has a factory-set RDM UID (unique identification number) that makes it addressable and identifiable in RDM systems. The number can be found in the control panel **INFORMATION** menu under **RDM UID**.

RDM communication

The MAC Aura PXL supports the standard RDM PIDs (Parameter IDs) required by ESTA plus a range of manufacturer-specific PIDs. Sending SUPPORTED_PARAMETERS and PARAMETER_DESCRIPTION commands from an RDM controller will call up a list of the PIDs supported in the firmware version installed in the fixture.

The PIDs in the following tables are supported in software v.1.5.xx. Other PIDs may be added in later firmware versions. In this case, firmware release notes will give details.

Martin Companion and RDM

The Martin Companion Windows application (downloadable free of charge from the Martin website at www.martin.com) gives access to all the fixture's RDM parameters. It supports the fixture's standard and manufacturer-specific PIDs. It gives full control of all fixture settings remotely, eliminating the need to physically climb to the fixture in a rig, for example.

Martin Companion can also update multiple RDM parameters at once, using the built-in Settings Template system.

Standard RDM Parameter IDs

GET allowed	SET allowed	RDM parameter ID's (slot 21-22)	Notes
		Network Management	
		DISC_UNIQUE_BRANCH	
		DISC_MUTE	
		DISC_UN_MUTE	
		Status Collection	
✓		QUEUED_MESSAGE	
✓		STATUS_MESSAGES	
✓		STATUS_ID_DESCRIPTION	
	✓	CLEAR_STATUS_ID	
		RDM Information	
✓		SUPPORTED_PARAMETERS	
✓		PARAMETER_DESCRIPTION	

GET	SET	Product information	
✓		DEVICE_INFO	
✓		DEVICE_MODEL_DESCRIPTION	
✓		MANUFACTURER_LABEL	
✓	✓	DEVICE_LABEL	
✓	✓	FACTORY_DEFAULTS	
✓		SOFTWARE_VERSION_LABEL	
		DMX Setup	
✓	✓	DMX_PERSONALITY	
✓		DMX_PERSONALITY_DESCRIPTION	
✓	✓	DMX_START_ADDRESS	
✓		SLOT_DESCRIPTION	
		Sensors	
✓		SENSOR_DEFINITION	
✓		SENSOR_VALUE	
		Usage information	
✓		DEVICE_HOURS	
✓		DEVICE_POWER_CYCLES	
		Onboard LCD display	
✓	✓	DISPLAY_INVERT	
✓	✓	DISPLAY_LEVEL	
		Configuration	
✓	✓	PAN_INVERT	
✓	✓	TILT_INVERT	
		IP configuration	
✓		LIST_INTERFACES	
✓		INTERFACE_LABEL	
✓		INTERFACE_HARDWARE_ADDRESS_TYPE1	
✓		IPV4_DHCP_MODE	
✓		IPV4_CURRENT_ADDRESS	
✓	✓	IPV4_STATIC_ADDRESS	
	✓	INTERFACE_APPLY_CONFIGURATION	
		Control	
✓	✓	IDENTIFY_DEVICE	
	✓	RESET_DEVICE	
✓	✓	PERFORM_SELFTEST	
✓		SELF_TEST_DESCRIPTION	

Manufacturer-specific RDM Parameter IDs

GET allowed	SET allowed	RDM parameter ID's (slot 21-22)	Notes
		DMX protocol	
✓	✓	DMX_RESET_ENABLE	
		Fixture behavior	
✓	✓	EFFECT_SPEED	
✓	✓	EFFECT_SHORTCUTS_ENABLE	
✓	✓	DISPLAY ERRORS ENABLE	
✓	✓	DIMMER_CURVE	
✓	✓	COLOR_MODE	
✓	✓	VIDEO_TRACKING	
✓	✓	DISPLAY_AUTO_OFF	
✓	✓	DISPLAY_CONTRAST	
✓	✓	HIBERNATION MODE	
✓	✓	TUNGSTEN MODE	
✓	✓	AURA_IN_COMPACT_MODE	Aura On/Off in Compact and Compact Direct DMX Modes
		Pan/tilt	
✓	✓	PAN_TILT_SPEED	
✓	✓	PAN_TILT_LIMITATION_ENABLE	
✓	✓	PAN_LIMIT_MIN	
✓	✓	PAN_LIMIT_MAX	
✓	✓	TILT_LIMIT_MIN	
✓	✓	TILT_LIMIT_MAX	
	✓	PAN_TILT_LIMIT_RESET	
		Fixture cooling	
✓	✓	FAN_MODE	
✓	✓	FAN_CLEAN	
		Fixture information	
✓	✓	FIXTURE_ID	
✓		SERIAL_NUMBER	

DMX protocol

MAC Aura PXL firmware version 1.6.xxx.

Compact DMX Mode

Channel	DMX Value	Function	Fade type	Default value
Strobe / Intensity				
1	0 - 19 20 - 49 50 - 200 201 - 210 211 - 255	**Strobe/shutter effect** Shutter closed Shutter open Strobe, slow → fast Shutter open Random strobe, slow → fast	Snap	30
2 **3**	0 - 65535	**Dimmer (16-bit)** Overall intensity 0 → 100%	Fade	0
Color: all 19 Beam pixels and all Aura pixels controlled as one single pixel				
4 **5**	0 - 65535	**Red, 16-bit** Intensity 0 → 100%	Fade	65535
6 **7**	0 - 65535	**Green, 16-bit** Intensity 0 → 100%	Fade	65535
8 **9**	0 - 65535	**Blue, 16-bit** Intensity 0 → 100%	Fade	65535
10	0 - 10 11 - 171 172 - 255	**CTC** Disabled Color temperature 2000 K to 10 000 K in 50 K steps 10 000 K	Fade	0
11	0 -10 11 13 15 17 19 21 23 25 27 29 31 33 35 37 39 41 43 45 47 49 51 53 55 57 59	**Virtual color wheel** **Indexing, solid colors** Open Moroccan pink (Lee 790) Pink (Lee 157) Special rose pink (Lee 332) Follies pink (Lee 328) Fuchsia pink (Lee 345) Surprise pink (Lee 194) Congo blue (Lee 181) Tokyo blue (Lee 071) Deep blue (Lee 120) Just blue (Lee 079) Medium blue (Lee 132) Double CT blue (Lee 200) Slate blue (Lee 161) Full CT blue (Lee 201) Half CT blue (Lee 202) Steel blue (Lee 117) Lighter blue (Lee 353) Light blue (Lee 118) Medium blue green (Lee 116) Dark green (Lee 124) Primary green (Lee 139) Moss green (Lee 089) Fern green (Lee 122) Jas green (Lee 738) Lime green (Lee 088)	Snap	0

Table 1: Compact DMX Mode

Channel	DMX Value	Function	Fade type	Default value
11 cont.	61 63 65 67 69 71 73 75 77 79 81 83 85 87 89 91 93 95 97 99 101 103 105 107- 190 191 - 214 215 - 219 220 - 243 244 - 247 248 - 251 252 - 255	Spring yellow (Lee 100) Deep amber (Lee 104) Chrome orange (Lee 179) Orange (Lee 105) Gold amber (Lee 021) Millennium gold (Lee 778) Deep golden amber (Lee 135) Flame red (Lee 164) Red magenta Medium lavender Pure white Pure red Pure yellow Pure green Pure cyan Pure blue Pure magenta Peacock blue (LEE 115) Dark lavender (LEE 180) Double CT orange (LEE 287) Full CT orange (LEE 204) Half CT orange (LEE 205) Deep Straw (LEE 015) *No function* **Continuous rotation** CW, fast → slow Stop (wheel stops at current color) CCW slow → fast **Random colors** Fast Medium Slow	Snap	0
Beam angle				
12	0 - 255	**Zoom** Narrow → wide	Fade	128
Movement				
13 **14**	0 - 65535	**Pan, 16-bit** Left → right (32768 = neutral)	Fade	32768
15 **16**	0 - 65535	**Tilt, 16-bit** Forward → backward (32768 = neutral)	Fade	32768
Control / Settings				
17	0 - 9 10 - 14 15 - 16 17 18 19 - 22 23 24 25 26 27 28 29 30 - 35 36 37 38 39 40 - 51	**Fixture control/settings** *(hold for number of seconds indicated to activate)* *No function (disables calibration)* – 5 sec. Reset entire fixture – 5 sec. *No function* Reset beam only– 5 sec. Reset pan and tilt only – 5 sec. *No function* Linear dimming curve – 1 sec. (menu override, setting unaffected by power off/on) Square law dimming curve – 1 sec. (menu override, default setting, setting unaffected by power off/on) Inverse square law dimming curve – 1 sec. (menu override, setting unaffected by power off/on) S-curve dimming curve– 1 sec. (menu override, setting unaffected by power off/on) *No function* Fast pan and tilt speed– 1 sec. (default setting, menu override - setting returns to MENU setting after power on/off) Smooth pan and tilt speed– 1 sec. (menu override - setting returns to MENU setting after power on/off) *No function* Video tracking = ON – 1 sec. Video tracking = OFF (default) – 1 sec. Extended color mode (default) – 1 sec. Calibrated color mode – 1 sec. *No function*		

Table 1: Compact DMX Mode

Channel	DMX Value	Function	Fade type	Default value
17 cont.	52	Control panel display = ON (default) – 1 sec.	Snap	0
	53	Control panel display = OFF – 1 sec.		
	54	Regulated fan speed, fixed light output intensity (default) – 1 sec.		
	55	Full fan speed, regulated light output intensity – 1 sec.		
	56	Medium fan speed, regulated light output intensity – 1 sec.		
	57	Low fan speed, regulated light output intensity – 1 sec.		
	58	Ultra-low fan speed, regulated light output intensity – 1 sec.		
	59 - 60	*No function*		
	61	Hibernation mode = ON – 5 sec.		
	62	Hibernation mode = OFF (default) – 5 sec.		
	63 - 64	*No function*		
	65	Pan and tilt limits = ON – 5 sec.		
	66	Pan and tilt limits = OFF (default) – 5 sec.		
	67	Store lower pan limit – 5 sec.		
	68	Store upper pan limit – 5 sec.		
	69	Store lower tilt limit – 5 sec.		
	70	Store upper tilt limit – 5 sec.		
	71	Reset pan and tilt limits – 5 sec.		
	72	Tungsten emulation = ON – 1 sec.		
	73	Tungsten emulation = OFF (default) – 1 sec.		
	74 - 84	*No function*		
	85	Low-noise LED mode = ON – 1 sec.		
	86	Low-noise LED mode = OFF (default) – 1 sec.		
	87 - 91	*No function*		
	92	Compact Mode Aura = ON – 1 sec.		
	93	Compact Mode Aura = OFF (default setting) – 1 sec.		
	94 - 99	*No function*		
	100	Enable calibration – 5 sec.		
	101	Store pan and tilt calibration – 5 sec.		
	102	Store dimmer calibration – 5 sec.		
	103 - 113	*No function*		
	114	Store zoom calibration – 5 sec.		
	115 - 198	*No function*		
	199	Reset all calibration values to factory default – 5 sec.		
	200 - 255	*No function*		

Table 1: Compact DMX Mode

Basic DMX Mode

Channels 1- 17 in Basic Mode are identical to Compact Mode apart from channels 1 - 11. In Compact Mode, channels 1 - 11 control the whole fixture (Beam and Aura) as one unit. In Basic Mode, channels 1 - 11 control the Beam only, and channels 24 - 32 control the Aura.

Channel	DMX Value	Function	Fade type	Default value
Beam P3 Mix				
18	0 - 26 27 27 - 227 228 229 - 255	**Beam P3 Mix** *DMX Mode* Beam output fully controlled by DMX (P3 pixel data ignored) *Mixed Mode* Beam output fully controlled by DMX (P3 pixel data ignored) Progressive crossfade from DMX to P3 control Beam output fully controlled by P3 (DMX data ignored) *Video Mode* P3 pixel control with DMX superimposed (DMX channels ‘color’ the P3 pixel data)	Snap	0
Macro FX				
19	0 - 255	**FX1 selection (see Table 6 on page 40)** Effect selection (adjust speed and direction on DMX channel 20)	Snap	0
20	0 - 126 127 - 129 130 - 255	**FX1 speed** Effect reversed fast → slow Effect stops Effect forward slow → fast	Fade	128
21	0 - 255	**FX2 selection (see Table 6 on page 40)** Effect selection (adjust speed and direction on DMX channel 22)	Snap	0
22	0 - 126 127 - 129 130 - 255	**FX2 speed** Effect reversed fast → slow Effect stops Effect forward slow → fast	Fade	128
23	0 1 2 3 4 5 6 7 8 9 10 11 12 13 14 15 16 17 18 19 20 21 22 23 24 25 26 27 28	**FX synchronization** No sync Offset shift 10° Offset shift 20° Offset shift 30° Offset shift 40° Offset shift 50° Offset shift 60° Offset shift 70° Offset shift 80° Offset shift 90° Offset shift 100° Offset shift 110° Offset shift 120° Offset shift 130° Offset shift 140° Offset shift 150° Offset shift 160° Offset shift 170° Offset shift 180° Offset shift 190° Offset shift 200° Offset shift 210° Offset shift 220° Offset shift 230° Offset shift 240° Offset shift 250° Offset shift 260° Offset shift 270° Offset shift 280°	Snap	36

Table 2: Basic DMX Mode

Channel	DMX Value	Function	Fade type	Default value
23 cont.	29 30 31 32 33 34 35 36 37 - 100 101 - 120 121 - 140 141 - 255	Offset shift 290° Offset shift 300° Offset shift 310° Offset shift 320° Offset shift 330° Offset shift 340° Offset shift 350° Synchronized: all fixtures start FX cycles at same time *No function* Random start (Channel 20 controls overall speed) Random duration *No function*	Snap	36
Aura control				
24	0 - 19 20 - 49 50 - 200 201 - 210 211 - 255	**Aura strobe shutter** Shutter closed Shutter open Strobe slow → fast Shutter open Random strobe slow → fast	Snap	30
25 **26**	0 - 65535	**Aura dimmer (16-bit)** Intensity 0 - 100%	Fade	0
27	0 - 255	**Aura Red** 0 - 100%	Fade	255
28	0 - 255	**Aura Green** 0 - 100%	Fade	255
29	0 - 255	**Aura Blue** 0 - 100%	Fade	255
30	0 - 10 11 - 171 172 - 255	**Aura CTC** Disabled Color temperature 2000 K to 10 000 K in 50 K steps 10 000 K	Fade	0
31	0 -10 11 13 15 17 19 21 23 25 27 29 31 33 35 37 39 41 43 45 47 49 51 53 55 57 59 61 63	**Aura virtual color wheel** **Indexing, solid colors** Open Moroccan pink (Lee 790) Pink (Lee 157) Special rose pink (Lee 332) Follies pink (Lee 328) Fuchsia pink (Lee 345) Surprise pink (Lee 194) Congo blue (Lee 181) Tokyo blue (Lee 071) Deep blue (Lee 120) Just blue (Lee 079) Medium blue (Lee 132) Double CT blue (Lee 200) Slate blue (Lee 161) Full CT blue (Lee 201) Half CT blue (Lee 202) Steel blue (Lee 117) Lighter blue (Lee 353) Light blue (Lee 118) Medium blue green (Lee 116) Dark green (Lee 124) Primary green (Lee 139) Moss green (Lee 089) Fern green (Lee 122) Jas green (Lee 738) Lime green (Lee 088) Spring yellow (Lee 100) Deep amber (Lee 104)	Snap	0

Table 2: Basic DMX Mode

Channel	DMX Value	Function	Fade type	Default value
31 cont.	65	Chrome orange (Lee 179)	Snap	0
	67	Orange (Lee 105)		
	69	Gold amber (Lee 021)		
	71	Millennium gold (Lee 778)		
	73	Deep golden amber (Lee 135)		
	75	Flame red (Lee 164)		
	77	Red magenta		
	79	Medium lavender		
	81	Pure white		
	83	Pure red		
	85	Pure yellow		
	87	Pure green		
	89	Pure cyan		
	91	Pure blue		
	93	Pure magenta		
	95	Peacock blue (LEE 115)		
	97	Dark lavender (LEE 180)		
	99	Double CT orange (LEE 287)		
	101	Full CT orange (LEE 204)		
	103	Half CT orange (LEE 205)		
	105	Deep Straw (LEE 015)		
	107 - 190	*No function*		
		Continuous rotation		
	191 - 214	CW, fast → slow		
	215 - 219	Stop (wheel stops at current color)		
	220 - 243	CCW slow → fast		
		Random colors		
	244 - 247	Fast		
	248 - 251	Medium		
	252 - 255	Slow		
32		**Aura P3 Mix**	Snap	0
		DMX Mode		
	0 - 26	Output fully controlled by DMX (P3 pixel data ignored)		
		Mixed Mode		
	27	Output fully controlled by DMX (P3 pixel data ignored)		
	28 - 227	Progressive crossfade from DMX to P3 control		
	228	Output fully controlled by P3 (DMX data ignored)		
		Video Mode		
	229 - 255	P3 pixel control with DMX superimposed (DMX channels ‘color’ the P3 pixel data)		

Table 2: Basic DMX Mode

Extended DMX Mode

DMX channels 1 - 32 in Extended Mode are identical to Basic Mode. Note that, as in Basic Mode, channels 1 - 11 control the Beam only, and channels 24 - 32 control the Aura.

Channel	DMX Value	Function	Fade type	Default value
Beam pixel color (pixel color control of 19 x Beam LEDs, global Beam RGB channels are added using HTP)				
33	0 - 255	**Beam pixel 1 Red** 0 - 100%	Fade	0
34	0 - 255	**Beam pixel 1 Green** 0 - 100%	Fade	0
35	0 - 255	**Beam pixel 1 Blue** 0 - 100%	Fade	0
36	0 - 255	**Beam pixel 2 Red** 0 - 100%	Fade	0
37	0 - 255	**Beam pixel 2 Green** 0 - 100%	Fade	0
38	0 - 255	**Beam pixel 2 Blue** 0 - 100%	Fade	0
39	0 - 255	**Beam pixel 3 Red** 0 - 100%	Fade	0
40	0 - 255	**Beam pixel 3 Green** 0 - 100%	Fade	0
41	0 - 255	**Beam pixel 3 Blue** 0 - 100%	Fade	0
42	0 - 255	**Beam pixel 4 Red** 0 - 100%	Fade	0
43	0 - 255	**Beam pixel 4 Green** 0 - 100%	Fade	0
44	0 - 255	**Beam pixel 4 Blue** 0 - 100%	Fade	0
45	0 - 255	**Beam pixel 5 Red** 0 - 100%	Fade	0
46	0 - 255	**Beam pixel 5 Green** 0 - 100%	Fade	0
47	0 - 255	**Beam pixel 5 Blue** 0 - 100%	Fade	0
48	0 - 255	**Beam pixel 6 Red** 0 - 100%	Fade	0
49	0 - 255	**Beam pixel 6 Green** 0 - 100%	Fade	0
50	0 - 255	**Beam pixel 6 Blue** 0 - 100%	Fade	0
51	0 - 255	**Beam pixel 7 Red** 0 - 100%	Fade	0
52	0 - 255	**Beam pixel 7 Green** 0 - 100%	Fade	0
53	0 - 255	**Beam pixel 7 Blue** 0 - 100%	Fade	0
54	0 - 255	**Beam pixel 8 Red** 0 - 100%	Fade	0
55	0 - 255	**Beam pixel 8 Green** 0 - 100%	Fade	0
56	0 - 255	**Beam pixel 8 Blue** 0 - 100%	Fade	0
57	0 - 255	**Beam pixel 9 Red** 0 - 100%	Fade	0
58	0 - 255	**Beam pixel 9 Green** 0 - 100%	Fade	0
59	0 - 255	**Beam pixel 9 Blue** 0 - 100%	Fade	0

Table 3: Extended DMX Mode

Channel	DMX Value	Function	Fade type	Default value
60	0 - 255	**Beam pixel 10 Red** 0 - 100%	Fade	0
61	0 - 255	**Beam pixel 10 Green** 0 - 100%	Fade	0
62	0 - 255	**Beam pixel 10 Blue** 0 - 100%	Fade	0
63	0 - 255	**Beam pixel 11 Red** 0 - 100%	Fade	0
64	0 - 255	**Beam pixel 11 Green** 0 - 100%	Fade	0
65	0 - 255	**Beam pixel 11 Blue** 0 - 100%	Fade	0
66	0 - 255	**Beam pixel 12 Red** 0 - 100%	Fade	0
67	0 - 255	**Beam pixel 12 Green** 0 - 100%	Fade	0
68	0 - 255	**Beam pixel 12 Blue** 0 - 100%	Fade	0
69	0 - 255	**Beam pixel 13 Red** 0 - 100%	Fade	0
70	0 - 255	**Beam pixel 13 Green** 0 - 100%	Fade	0
71	0 - 255	**Beam pixel 13 Blue** 0 - 100%	Fade	0
72	0 - 255	**Beam pixel 14 Red** 0 - 100%	Fade	0
73	0 - 255	**Beam pixel 14 Green** 0 - 100%	Fade	0
74	0 - 255	**Beam pixel 14 Blue** 0 - 100%	Fade	0
75	0 - 255	**Beam pixel 15 Red** 0 - 100%	Fade	0
76	0 - 255	**Beam pixel 15 Green** 0 - 100%	Fade	0
77	0 - 255	**Beam pixel 15 Blue** 0 - 100%	Fade	0
78	0 - 255	**Beam pixel 16 Red** 0 - 100%	Fade	0
79	0 - 255	**Beam pixel 16 Green** 0 - 100%	Fade	0
80	0 - 255	**Beam pixel 16 Blue** 0 - 100%	Fade	0
81	0 - 255	**Beam pixel 17 Red** 0 - 100%	Fade	0
82	0 - 255	**Beam pixel 17 Green** 0 - 100%	Fade	0
83	0 - 255	**Beam pixel 17 Blue** 0 - 100%	Fade	0
84	0 - 255	**Beam pixel 18 Red** 0 - 100%	Fade	0
85	0 - 255	**Beam pixel 18 Green** 0 - 100%	Fade	0
86	0 - 255	**Beam pixel 18 Blue** 0 - 100%	Fade	0
87	0 - 255	**Beam pixel 19 Red** 0 - 100%	Fade	0
88	0 - 255	**Beam pixel 19 Green** 0 → 100%	Fade	0
89	0 - 255	**Beam pixel 19 Blue** 0 → 100%	Fade	0

Table 3: Extended DMX Mode

Ludicrous DMX Mode

DMX channels 1 - 89 in Ludicrous Mode are identical to Extended Mode and Basic Mode. Note that, as in Basic and Extended Modes, channels 1 - 11 control the Beam only, and channels 24 - 32 control the Aura

Channel	DMX Value	Function	Fade type	Default value
Aura pixel color (pixel color control of 141 x Aura LEDs, global Aura RGB channels are added using HTP)				
90	0 - 255	**Aura pixel 1 Red** 0 - 100%	Fade	0
91	0 - 255	**Aura pixel 1 Green** 0 - 100%	Fade	0
92	0 - 255	**Aura pixel 1 Blue** 0 - 100%	Fade	0
...	**...**	**...**	**...**	**...**
510	0 - 255	**Aura pixel 141 Red** 0 - 100%	Fade	0
511	0 - 255	**Aura pixel 141 Green** 0 - 100%	Fade	0
512	0 - 255	**Aura pixel 141 Blue** 0 - 100%	Fade	0

Table 4: Ludicrous DMX Mode

Compact Direct DMX Mode

Channels 1- 9 in Compact Direct Mode are identical to Compact Mode. Channels 10 and 11 give 16-bit control of White intensity. Channels 12 - 17 are identical to Compact Mode.

Channel	DMX Value	Function	Fade type	Default value
Strobe / Intensity				
1	0 - 19 20 - 49 50 - 200 201 - 210 211 - 255	**Strobe/shutter effect** Shutter closed Shutter open Strobe, slow → fast Shutter open Random strobe, slow → fast	Snap	30
2 **3**	0 - 65535	**Dimmer (16-bit)** Overall intensity 0 → 100%	Fade	0
RGBW Color: all 19 Beam pixels and all Aura pixels controlled as one single pixel				
4 **5**	0 - 65535	**Red, 16-bit** Intensity 0 → 100%	Fade	65535
6 **7**	0 - 65535	**Green, 16-bit** Intensity 0 → 100%	Fade	65535
8 **9**	0 - 65535	**Blue, 16-bit** Intensity 0 → 100%	Fade	65535
10 **11**	0 - 65535	**White, 16-bit** Intensity 0 → 100%	Fade	65535
Beam angle				
12	0 - 255	**Zoom** Narrow → wide	Fade	128
Movement				
13 **14**	0 - 65535	**Pan, 16-bit** Left → right (32768 = neutral)	Fade	32768
15 **16**	0 - 65535	**Tilt, 16-bit** Forward → backward (32768 = neutral)	Fade	32768
Control / Settings				
17	0 - 9 10 - 14 15 - 16 17 18 19 - 22 23 24 25 26 27 28 29 30 - 35 36 37 38 39 40 - 51	**Fixture control/settings** *(hold for number of seconds indicated to activate)* *No function (disables calibration)* – 5 sec. Reset entire fixture – 5 sec. *No function* Reset beam only– 5 sec. Reset pan and tilt only – 5 sec. *No function* Linear dimming curve – 1 sec. (menu override, setting unaffected by power off/on) Square law dimming curve – 1 sec. (menu override, default setting, setting unaffected by power off/on) Inverse square law dimming curve – 1 sec. (menu override, setting unaffected by power off/on) S-curve dimming curve– 1 sec. (menu override, setting unaffected by power off/on) *No function* Fast pan and tilt speed– 1 sec. (default setting, menu override - setting returns to MENU setting after power on/off) Smooth pan and tilt speed– 1 sec. (menu override - setting returns to MENU setting after power on/off) *No function* Video tracking = ON – 1 sec. Video tracking = OFF (default) – 1 sec. Extended color mode (default) – 1 sec. Calibrated color mode – 1 sec. *No function*		

Table 5: Compact DMX Mode

Channel	DMX Value	Function	Fade type	Default value
17 cont.	52	Control panel display = ON (default) – 1 sec.	Snap	0
	53	Control panel display = OFF – 1 sec.		
	54	Regulated fan speed, fixed light output intensity (default) – 1 sec.		
	55	Full fan speed, regulated light output intensity – 1 sec.		
	56	Medium fan speed, regulated light output intensity – 1 sec.		
	57	Low fan speed, regulated light output intensity – 1 sec.		
	58	Ultra-low fan speed, regulated light output intensity – 1 sec.		
	59 - 60	*No function*		
	61	Hibernation mode = ON – 5 sec.		
	62	Hibernation mode = OFF (default) – 5 sec.		
	63 - 64	*No function*		
	65	Pan and tilt limits = ON – 5 sec.		
	66	Pan and tilt limits = OFF (default) – 5 sec.		
	67	Store lower pan limit – 5 sec.		
	68	Store upper pan limit – 5 sec.		
	69	Store lower tilt limit – 5 sec.		
	70	Store upper tilt limit – 5 sec.		
	71	Reset pan and tilt limits – 5 sec.		
	72	Tungsten emulation = ON – 1 sec.		
	73	Tungsten emulation = OFF (default) – 1 sec.		
	74 - 84	*No function*		
	85	Low-noise LED mode = ON – 1 sec.		
	86	Low-noise LED mode = OFF (default) – 1 sec.		
	87 - 91	*No function*		
	92	Compact Mode Aura = ON – 1 sec.		
	93	Compact Mode Aura = OFF (default setting) – 1 sec.		
	94 - 99	*No function*		
	100	Enable calibration – 5 sec.		
	101	Store pan and tilt calibration – 5 sec.		
	102	Store dimmer calibration – 5 sec.		
	103 - 113	*No function*		
	114	Store zoom calibration – 5 sec.		
	115 - 198	*No function*		
	199	Reset all calibration values to factory default – 5 sec.		
	200 - 255	*No function*		

Table 5: Compact DMX Mode

FX: pre-programmed effects

Important: FX are implemented in the MAC Aura PXL from firmware version 1.1.0 onward. You can quickly check which firmware version a fixture is running using INFORMATION → FW in the fixture's control menus. For information on updating firmware, see "Installing firmware" on page 21.

The table on the following pages lists the pre-programmed dynamic FX (effect macros) available in Basic, Extended and Ludicrous DMX modes in the MAC Aura PXL from *firmware version 1.1.0 onward*. You can select an FX on DMX channels 19 and 21 by sending the values listed in the table. Adjust effect speed on channels 20 and 22, and adjust synchronization of effects across different fixtures on channel 23.

Effects types

Beam intensity effects (1-63)

These effects modulate the intensity of the Beam LEDs while maintaining the color(s) set by the RGB channels, RGB pixel channels and P3 pixels.

When the Beam virtual color wheel (DMX channel 11) is set to 0 (open), the intensity modulation uses black/off as reference. So (for example) the Beam Wave effect will sweep between full intensity and off.

When the Beam virtual color wheel (DMX channel 11) is set to any other color, the intensity modulation will use that selected color as reference. So (for example) the Beam Wave effect will sweep between the 'normal' color(s) and the color selected on the virtual color wheel.

Beam color effects (64-95)

These effects override the color(s) set by the RGB channels, RGB pixel channels, virtual color wheel and P3 pixels.

Aura intensity effects (96-191)

These effects modulate the intensity of the Aura LEDs while maintaining the color(s) set by the RGB channels, RGB pixel channels and P3 pixels.

When the Aura virtual color wheel (DMX channel 31) is set to 0 (open), the intensity modulation uses black/off as reference. So (for example) the Aura Wave effect will sweep between full intensity and off.

When the Aura virtual color wheel (DMX channel 31) is set to any other color, the intensity modulation will use that selected color as reference. So (for example) the Aura Wave effect will sweep between the 'normal' color(s) and the color selected on the virtual color wheel.

Aura color effects (192-223)

These effects override the color(s) set by the RGB channels, RGB pixel channels, virtual color wheel and P3 pixels.

Beam & Aura combined effects (224-239)

These effects apply to both the Beam and Aura LEDs and provide a complete effect.

Full fixture effects (240-254)

These effects also control the zoom of the fixture.

Dimming curve effect (255)

This FX applies a *Square Law* dimming curve to virtual dimmers used on a lighting console.

Effects types

Available from MAC Aura PXL firmware version 1.1.0 onward.

DMX value	Effect
0	No FX
Beam intensity FX	
1	Beam Wave (sine wave)
2	Beam Step (50/50 on/off)
3	Beam Pulse
4	Beam Blackout Strobe
5	Beam 2x Strobe
6	Beam 3x Strobe
7	Beam 4x Strobe
8	Beam Up, Down, Flash
9	Beam Up, Flash, Down, Flash
10	Beam Random Levels
11	Beam Sparkle Stars
12	Beam Starfield
13	Beam Fiber Optic
14	Beam Pixel Killer
15	Beam Build Up/Down (pixel after pixel turned on at random then off at random)
16	Beam In-Out Wave (crossfade between 3 rings)
17	Beam In-Out Step (step between 3 rings)
18	Beam In-Out Pulse (pulse 3 rings)
19	Beam Waterdrop (intensity from inner to outer gradually increasing / moving)
20	Beam Radar Spinning
21	Beam Cross (X) Spinning
22	Beam Cross (X) Circle (O) Wave
23	Beam Circling Snake
24	Beam Pie Slice Chase
25	Beam Random Chase 1 pixel Wave
26	Beam Random Chase 1 pixel Step
27	Beam Random Chase 1 pixel Pulse
28	Beam Random Chase 3 pixel Wave
29	Beam Random Chase 3 pixel Step
30	Beam Random Chase 3 pixel Pulse
31	Beam Random Chase 6 pixel Wave
32	Beam Random Chase 6 pixel Step
33	Beam Random Chase 6 pixel Pulse
34	Beam Vertical Wave
35	Beam Horizontal Wave
36	Beam Vertical Bouncing Line
37	Beam Horizontal Bouncing Line
38	Beam Vertical + Horizontal Bouncing Line
39	Beam Noise
40	Beam Movie Flicker
41	Beam Atomic Lighting
42	Beam Thunderstorm
43 - 63	*No function*

Table 6: FX in the MAC Aura PXL

Beam color FX	
64	Beam Rainbow Wave
65	Beam Rainbow Step
66	Beam Rainbow Pulse
67	Beam RGB Wave
68	Beam RGB Step
69	Beam RGB Pulse
70	Beam CMY Wave
71	Beam CMY Step
72	Beam CMY Pulse
73	Beam Random Mix Wave
74	Beam Random Mix Step
75	Beam Random Mix Pulse
76	Beam Spectrum Shifter
77	Beam Red White Blue Fade
78	Beam Red White Blue Snaps
79	Beam Fire
80	Beam Water
81	Beam Swimming Pool
82	Beam Ice
83	Beam Hot and Cold
84	Beam Warm and Fuzzy
85	Beam Silver and Gold
86	Beam Gold and Silver
87	Beam Electric Arc
88	Beam Plasma
89 -95	*No function*
Aura intensity FX	
96	Aura Wave (sine wave)
97	Aura Step (50/50 on/off)
98	Aura Pulse
99	Aura Blackout Strobe
100	Aura 2x Strobe
101	Aura 3x Strobe
102	Aura 4x Strobe
103	Aura Up, Down, Flash
104	Aura Up, Flash, Down, Flash
105	Aura Random Levels
106	Aura Sparkle Stars
107	Aura Starfield
108	Aura Fiber Optic
109	Aura Pixel Killer
110	Aura Build Up/Down (pixel after pixel turned on at random then off at random)
111	Aura In-Out Wave (crossfade between 3 rings)
112	Aura In-Out Step (step between 3 rings)
113	Aura In-Out Pulse (pulse 3 rings)
114	Aura Waterdrop (intensity inner to outer gradually increasing)
115	Aura Radar Spinning
116	Aura Cross (X) Spinning
117	Aura Cross (X) Circle (O) Wave
118	Aura Circling Snake
119	Aura Pie Slice Chase
120	Aura Random Chase 1 pixel Wave

Table 6: FX in the MAC Aura PXL

121	Aura Random Chase 1 pixel Step
122	Aura Random Chase 1 pixel Pulse
123	Aura Random Chase 3 pixel Wave
124	Aura Random Chase 3 pixel Step
125	Aura Random Chase 3 pixel Pulse
126	Aura Random Chase 6 pixel Wave
127	Aura Random Chase 6 pixel Step
128	Aura Random Chase 6 pixel Pulse
129	Aura Vertical Wave
130	Aura Horizontal Wave
131	Aura Vertical Bouncing Line
132	Aura Horizontal Bouncing Line
133	Aura Vertical + Horizontal Bouncing Line
134	Aura Noise
135	Aura Movie Flicker
136	Aura Atomic Lightning
137	Aura Thunderstorm
138	Aura A Wave
139	Aura B Wave
140	Aura C Wave
141	Aura D Wave
142	Aura E Wave
143	Aura F Wave
144	Aura G Wave
145	Aura H Wave
146	Aura I Wave
147	Aura J Wave
148	Aura K Wave
149	Aura L Wave
150	Aura M Wave
151	Aura N Wave
152	Aura O Wave
153	Aura P Wave
154	Aura Q Wave
155	Aura R Wave
156	Aura S Wave
157	Aura T Wave
158	Aura U Wave
159	Aura V Wave
160	Aura W Wave
161	Aura X Wave
162	Aura Y Wave
163	Aura Z Wave
164	Aura 0 Wave
165	Aura 1 Wave
166	Aura 2 Wave
167	Aura 3 Wave
168	Aura 4 Wave
169	Aura 5 Wave
170	Aura 6 Wave
171	Aura 7 Wave
172	Aura 8 Wave
173	Aura 9 Wave
174 - 191	*No function*

Table 6: FX in the MAC Aura PXL

Aura color FX	
192	Aura Rainbow Wave
193	Aura Rainbow Step
194	Aura Rainbow Pulse
195	Aura RGB Wave
196	Aura RGB Step
197	Aura RGB Pulse
198	Aura CMY Wave
199	Aura CMY Step
200	Aura CMY Pulse
201	Aura Random Mix Wave
202	Aura Random Mix Step
203	Aura Random Mix Pulse
204	Aura Spectrum Shifter
205	Aura Red White Blue Fade
206	Aura Red White Blue Snaps
207	Aura Fire
208	Aura Water
209	Aura Swimming Pool
210	Aura Ice
211	Aura Hot and Cold
212	Aura Warm and Fuzzy
213	Aura Silver and Gold
214	Aura Gold and Silver
215	Aura Electric Arc
216	Aura Plasma
217 - 223	*No function*
Beam / Aura combined FX	
224	Full Thunderstorm
225	Full Welding
226	Full 3-Step Strobe
227	Full Tick Tock
228	Aura Ramp, Beam Flash
229	Beam Ramp, Aura Flash
230	Beam-Aura Wave (sine wave)
231	Beam-Aura Step (50/50 on/off)
232	Beam-Aura Pulse (sine wave)
233 - 239	*No function*
Full fixture FX	
240	Beam Splash
241	Beam Splash Invert
242	Aura Splash
243	Aura Splash Invert
244	Beam Zoom Out Towards Aura
245	Beam Zoom In Towards Aura
246 - 254	*No function*
Dimming curve FX	
255	Applies a dimming curve to virtual dimmers used on a lighting console.

Table 6: FX in the MAC Aura PXL

Control panel menus

Available when running MAC Aura PXL firmware version 1.5.xx.

The table below gives details of the menus available in the fixture's control panel.

Menu level 1	Menu level 2	Menu level 3	Menu level 4	Notes (Default settings in bold print)
DMX SETUP	DMX ADDRESS	**1** – XXX		DMX address (default address = **1**). The DMX address range is limited so that the fixture will always have enough DMX channels within the 512 available. Note that Ludicrous Mode uses 512 channels so in this mode the address can only be 001.
	DMX CONTROL MODE	COMPACT		Set DMX control mode
		BASIC		
		EXTENDED		
		LUDICROUS		
		COMPACT DIRECT		
	DMX UNIVERSE	1 - 63999		Set DMX universe
ETHERNET SETUP	IP ADDRESS	XXX.XXX.XXX.XXX		Display fixture's static IP address
		PART 1 MSB	0 - 255	Set far left block (most significant byte) of IP address
		PART 2	0 - 255	Set middle left block of IP address
		PART 3	0 - 255	Set middle right block of IP address
		PART 4 LSB	0 - 255	Set far right block (least significant byte) of IP address
	SUBNET MASK	XXX.XXX.XXX.XXX		Display fixture's subnet mask
		EDIT SUBNET MASK	XXX.XXX.XXX.XXX	Display fixture's subnet mask
			XXX.XXX.XXX.XXX	Set subnet mask with 1 bit increments from the left
	MAC ADDRESS	XX:XX:XX:XX:XX:XX		Display fixture's MAC address
	RESET IP SETUP	RESET	ARE YOU SURE? YES/NO	Reset static IP address and subnet mask to default values
FIXTURE ID	**1** – 65535			User-settable fixture ID number and P3 address. Default = **1**

Table 7: Control menus

Menu level 1	Menu level 2	Menu level 3	Menu level 4	Notes (Default settings in bold print)
PERSONALITY	PAN/TILT	PAN INVERT	ON/**OFF**	Inverse DMX pan control: right → left
		TILT INVERT	ON/**OFF**	Inverse DMX tilt control: down → up
		LIMIT PAN/TILT	LIMIT ENABLE ON/**OFF**	Enable limits for pan and tilt
			PAN MIN → -32767 degrees	Set minimum pan angle
			PAN MAX → 32768 degrees	Set maximum pan angle
			TILT MIN → -32767 degrees	Set minimum tilt angle
			TILT MAX → 32768 degrees	Set maximum tilt angle
	SPEED	PAN/TILT	**FAST**	**Optimize pan/tilt movement for speed**
			SMOOTH	Optimize pan/tilt movement for smoothness
		EFFECT	**FOLLOW P/T**	**Effects speed follows the speed setting applied to pan and tilt via DMX or in control menu**
			FAST	Optimize effects movement for speed
			SMOOTH	Optimize effects movement for smoothness

Table 7: Control menus

Menu level 1	Menu level 2	Menu level 3	Menu level 4	Notes (Default settings in bold print)
PERSONALITY (continued)	DIMMER CURVE	LINEAR		Optically linear dimming curve
		SQUARE LAW		**Square law dimming curve**
		INV SQ LAW		Inverse square law dimming curve
		S-CURVE		S-curve (fixture emulates incandescent lamp voltage linear RMS dimming curve)
	TUNGSTEN EMULATOR	ON		Color temperature and dimming characteristics emulate tungsten lamp behavior
		OFF		
	COLOR MODE	**EXTENDED COLOR**		**Color mixing optimized for saturation**
		CALIBRATED		Color mixing optimized for even color rendition across fixtures
	VIDEO TRACKING	ENABLED		Color fading optimized for speed of color changes
		DISABLED		**Color fading optimized for smoothness**
	DMX RESET	**ON**		**Fixture can be reset via DMX**
		OFF		Fixture cannot be reset via DMX (note that this menu item can be overridden: see DMX protocol)
	EFFECT SHORTCUT	**ON**		**Effects take shortest route during changes, crossing open positions if necessary**
		OFF		Effects avoid open positions during effects changes
	COOLING MODE	CONSTANT FAN FULL		Fans optimized for maximum light intensity, fans run at full speed, light intensity reduced if necessary to keep fixture within temperature limits
		CONSTANT FAN MEDIUM		Fans run at medium speed, light intensity reduced if necessary to keep fixture within temperature limits
		CONSTANT FAN LOW		Fans run at low speed, light intensity reduced if necessary to keep fixture within temperature limits
		CONSTANT FAN ULOW		Fans optimized for lowest noise, fans run at ultra-low speed, light intensity reduced if necessary to keep fixture within temperature limits
		REGULATE FANS		**Compromise between light intensity and quietness, fan speed temperature-regulated, light intensity only reduced if fans reach full speed and further action necessary to keep fixture within temperature limits**
	LOW NOISE LED MODE	ON		Reduce high frequency noise coming from electronics with slightly less smooth low level dimming performance
		OFF		**Optimized low level dimming performance, but with minor high frequency noise coming from electronics (not noticeable in majority of applications)**

Table 7: Control menus

Menu level 1	Menu level 2	Menu level 3	Menu level 4	Notes (Default settings in bold print)
PERSONALITY (continued)	DISPLAY	DISPLAY SLEEP	10 MINUTES	Display goes into sleep mode 10 minutes after last key press
			5 MINUTES	Display goes into sleep mode five minutes after last key press
			2 MINUTES	**Display goes into sleep mode two minutes after last key press**
			ON	Display permanently on
		DISPLAY INTENSITY	10 ... **100 %**	Set display intensity in % (default = **100**)
		DISPLAY ROTATION	**NORMAL** / ROTATE 180	Display orientation **normal** or rotated 180°
		DISPLAY CONTRAST	1 ...100	Adjust contrast of display (default = **41**)
	ERROR MODE	**NORMAL**		**Enable error messages and warnings in display**
		SILENT		Disable error messages and warnings in display (the status LED will still light to indicate fixture status if an error has been detected or the fixture has a warning)
	HIBERNATION MODE	ON		Enable Hibernation Mode (light output set to zero, all effect movement disabled)
		OFF		Disable Hibernation Mode
	AURA IN COMPACT	ENABLE		Disabling allows Aura pixels to be OFF in Compact DMX Mode, enabling allows Aura pixels to follow Beam LEDs.
		DISABLE		
DEFAULT SETTINGS**	FACTORY DEFAULT	LOAD	ARE YOU SURE? YES/NO	Return all settings (except calibrations) to factory defaults
	CUSTOM 1	LOAD	ARE YOU SURE? YES/NO	Load Custom Settings 1
		SAVE	ARE YOU SURE? YES/NO	Save fixture's current settings as Custom Settings 1
	CUSTOM 2	LOAD	ARE YOU SURE? YES/NO	Load Custom Settings 2
		SAVE	ARE YOU SURE? YES/NO	Save fixture's current settings as Custom Settings 2
	CUSTOM 3	LOAD	ARE YOU SURE? YES/NO	Load Custom Settings 3
		SAVE	ARE YOU SURE? YES/NO	Save fixture's current settings as Custom Settings 3
INFORMATION	POWER ON TIME	TOTAL	0 ... XXX HR	Display hours fixture has been powered on since manufacture (not user-resettable)
		RESETTABLE	CLEAR COUNTER? YES/NO	Display hours fixture has been powered on since last counter reset (user-resettable)
	POWER ON CYCLES	TOTAL	0 ... XXX HR	Display number of times fixture has been powered on since manufacture (not user-resettable)
		RESETTABLE	CLEAR COUNTER? YES/NO	Display number of times fixture has been powered on since last counter reset (user-resettable)
	FW VERSION	XX.XX.XX		Displays currently active firmware version
	RDM UID**	4D50.XXXXXXXX		Displays fixture's unique RDM ID
	FAN SPEEDS**	HEAD FAN 1 ... 4, BASE FAN 1 - 2	0 - XXX RPM	Scroll to display current speed of each cooling fan (head and base)
	TEMPERA-TURES**	UI ... AURA PIXEL	CURRENT / MIN / MAX X C	Scroll through PCB temperature sensors, then display current, minimum* and maximum* temperature in °C of all PCBs *Since fixture was last powered on

Table 7: Control menus

Menu level 1	Menu level 2	Menu level 3	Menu level 4	Notes (Default settings in bold print)
DMX LIVE**	RATE	0 - 44 HZ		DMX transmission speed in packets per second
	QUALITY	0 - 100%		Percent of packets received
	START CODE	0 - 255		Value of the DMX start code
	STROBE/ SHUTTER ... AURA P3 MIX	XXX		Scroll to see values received on each DMX channel
TEST**	TEST ALL	BEAM DIMMER ... TILT		Run test sequence of all functions To test a specific function, use Up/Down buttons to scroll through functions. Press Enter to pause and press again to restart test sequence. Press Menu button to exit test
	TEST LEDS	BEAM DIMMER ... AURA V COLOR WHEEL		Run test sequence of LEDs only. To test a specific LED group, use Up/Down buttons to scroll through groups. Press Enter to pause and press again to restart test sequence. Press Menu button to exit test
TEST (continued)**	TEST EFFECTS	BEAM DIMMER ... AURA V COLOR WHEEL		Run test sequence of effects. To test a specific effect, use Up/Down buttons to scroll through groups. Press Enter to pause and press again to restart test sequence. Press Menu button to exit test
	TEST PAN/TILT	PAN		Run test sequence of pan functions. Press Menu button to exit test
		TILT		Run test sequence of tilt functions. Press Menu button to exit test
MANUAL CONTROL**	RESET			Reset fixture
	STROBE/SHUTTER ... AURA P3 MIX			Scroll through effects, then manually control an effect

Table 7: Control menus

Menu level 1	Menu level 2	Menu level 3	Menu level 4	Notes (Default settings in bold print)
SERVICE	ERROR LIST	Empty or up to 20 errors		Display any errors in memory
	FAN CLEAN**	ON/**OFF**		Start/stop fan cleaning
	PT FEEDBACK**	**ON**		**Enable pan/tilt position feedback systems**
		OFF		Disable pan/tilt position feedback
	ADJUST**	PAN/TILT AT END STOP	STEP 1	To adjust, move head to P/T adjustment position, then press Enter
			STEP 2	To adjust, move head to P/T adjustment position again, then press Enter
	CALIBRATION**	DIMMER	-30.00 ... 0.00%	Set max. dimmer intensity level
		RED	-30.00 ... 0.00%	Set max. red intensity level
		GREEN	-30.00 ... 0.00%	Set max. green intensity level
		BLUE	-30.00 ... 0.00%	Set max. blue intensity level
		ZOOM	-5.00 ... 5.00%	Set zoom home position
		PAN	-2.00 ... 2.00%	Set pan home position
		TILT	-2.00 ... 2.00%	Set tilt home position
		AURA DIMMER	-30.00 ... 0.00%	Set max. Aura dimmer intensity level
		AURA RED	-30.00 ... 0.00%	Set max. Aura red intensity level
		AURA GREEN	-30.00 ... 0.00%	Set max. Aura green intensity level
		AURA BLUE	-30.00 ... 0.00%	Set max. Aura blue intensity level
		LOAD DEFAULTS	LOAD	Load factory default calibration settings
		SAVE DEFAULTS	SAVE	Replace factory default calibration settings with current calibration settings
	USB**	NO DEVICE		No USB device present or no firmware on USB device
		UPDATING FILES		Fixture updating internal memory from USB device
		AVAILABLE FIRMWARE	XX.XX.XX ... XX.XX.XX	Select firmware from versions stored in internal memory. Scroll to select version, then press Enter and confirm your choice to update

Table 7: Control menus

***Menus or menu items marked ** are available only when the fixture is connected to mains power. All other menus are available in mains- and battery-powered operation.*

Service and display messages

The MAC Aura PXL gives service and maintenance information by displaying a large 3- or 4-character short code and a smaller full-text message in the fixture's display. The short code is visible at a distance, allowing easier reading with the fixture still in the rig, for example, while the full-text message gives more detailed information.

Warning messages

Warning messages indicate that either:

- problems might appear in the future if no action is taken, or
- the user needs to pay special attention to a function or procedure when working with the fixture.

The MAC Aura PXL communicates warnings as follows:

- Warning codes are shown continuously in the display and disappear when the user reacts to the warning.
- If more than one warning is detected, all warnings are displayed in sequence.
- If the display is inactive, the fixture's status LED (see Figure 3 on page 11) flashes orange to indicate that there is a warning. Activating the display will show the warning.

The possible warning messages are listed in Table 8 below:

Short code	Long message and explanation
BANK	BANK NO ACCESS Error unpacking firmware bank during/after software upload. Fixture will continue to operate on existing firmware. Warning message is cleared by a successful software upload or at the next power off/on cycle.
DCTW	DC TEMP HIGH DC PCB sensor detects abnormally high operating temperature.*
LDTW	LED DRV TMP HIGH LED driver temperature sensor detects abnormally high operating temperature.*
PFTW	PFC TEMP HIGH PFC unit temperature sensor detects abnormally high operating temperature.*
PTTW	PT TEMP HIGH Pan/tilt PCB sensor detects abnormally high operating temperature.*
SERV	SERVICE MODE Fixture in service mode.
SL W	SAFETY LOOP A safety loop error occurred but is no longer active. Warning message is cleared at the next power off/on cycle.
UITW	UI TEMP HIGH User interface (LCD display and control panel) PCB sensor detects abnormally high operating temperature.*
ZFTW	ZF TEMP HIGH Zoom PCB sensor detects abnormally high operating temperature.*

Table 8: Warning messages

**High temperature warnings are canceled as soon as temperature returns to normal. If temperature reaches cutoff level, the warning is replaced by a cutoff error message.*

Error messages

Error messages indicate that a problem is present. The MAC Aura PXL communicates errors as follows:

- Error messages flash in the display.
- If more than one error is detected, the fixture flashes all errors three times each.
- Errors are shown in the display regardless of display status: they override an inactive display and any other information that the display might be showing.
- If an error is present, the status LED flashes red.

The possible error messages are listed in Table 9 below:

Short code	Long message and explanation
CELD	COM ERR LED DRV LED driver communication error.
COLD	FIXTURE COLD Fixture too cold. Physical movement of effects is disabled until fixture has warmed up.
FAN	BASE FAN 1 ERR
FAN	BASE FAN 2 ERR
FAN	BASE FAN 3 ERR
FAN	HEAD FAN 1 ERR
FAN	HEAD FAN 2 ERR
FAN	HEAD FAN 3 ERR
FAN	HEAD FAN 4 ERR
FBEP	PAN FBACK ERR Pan position magnetic indexing system timeout. Fixture is unable to correct pan position (but pan movement will often still be possible).
FBET	TILT FBACK ERR Tilt position magnetic indexing system timeout. Fixture is unable to correct tilt position (but tilt movement will often still be possible).
FBEZ	ZOOM FBACK ERR Zoom position indexing system timeout. Fixture is unable to correct zoom position.
LDTC	LED TEMP SEN ERR LED board temperature sensor error.
LDTE	LED TEMP SEN ERR LED board temperature sensor error.
MMER	MISSING MODULE ERR Impossible to communicate with a module that should be present. Module missing or not correctly connected.
PAER	PAN ERROR Pan position electrical indexing system timeout.
PFTC	PFC TEMP CUT OFF Power factor correction system temperature cutoff.
PFTE	PFC TEMP SEN ERR Power factor correction system temperature sensor error.
PSER	PAN SENSOR ERROR Fixture unable to retrieve reliable data from pan position sensor.
PTCM	P/T SENSOR ADJUST Pan/tilt sensors are incorrectly adjusted.
SLER	SAFETY LOOP Safety loop circuit activated. A temperature circuit breaker has shut down LEDs. Circuit breaker resets automatically after temperature has returned to normal operating range.
TIER	TILT ERROR Tilt position electrical indexing circuit timeout.
TSER	TILT SENSOR ERR Fixture unable to retrieve reliable data from tilt position sensor.

Table 9: Error messages

Short code	Long message and explanation
UELD	UPL ERR LED DRV Could not upload new LED driver firmware during a firmware upload. Error cleared when new firmware is uploaded successfully or power is cycled off and on.
UITC	UI TEMP CUTOFF User interface (LCD display and control panel) temperature cutoff activated.
ZSER	ZOOM SENSOR ERR Zoom position electrical indexing system timeout.

Table 9: Error messages

The fixture reports a calibration error if valid calibration data is not detected in EEPROM. The fixture may be unable to read/write calibration data to EEPROM.

Control orientation reference

Pan and tilt control

Home position / Front of fixture

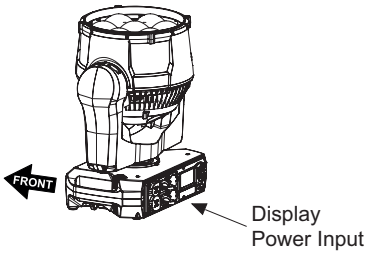

DMX disconnected

Tilt range = 220°

Tilt = DMX 0

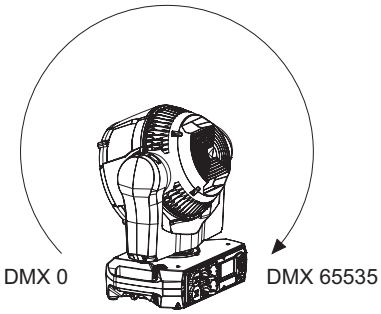

Pan = DMX 32768

Tilt = DMX 32768

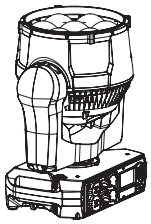

Pan = DMX 32768

Tilt = DMX 65535

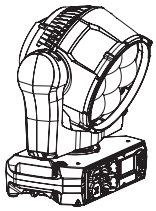

Pan = DMX 32768

Pan range = 540°

Pan = DMX 0

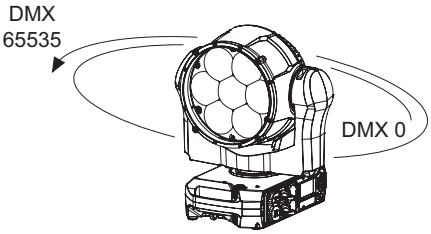

Tilt = DMX 5500

Pan = DMX 32768

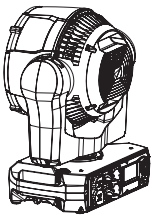

Tilt = DMX 5500

Pan = DMX 65535

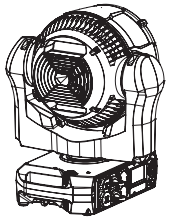

Tilt = DMX 5500

Fixture shown is an example for reference only

Zoom control

Zoom Wide = DMX 65535

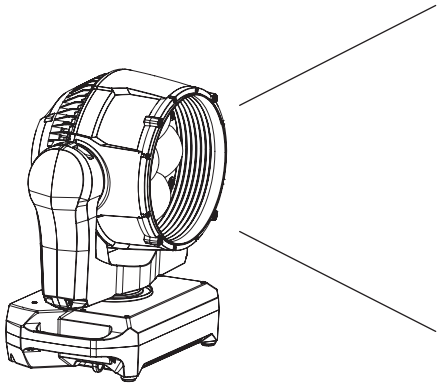

Zoom Narrow = DMX 0

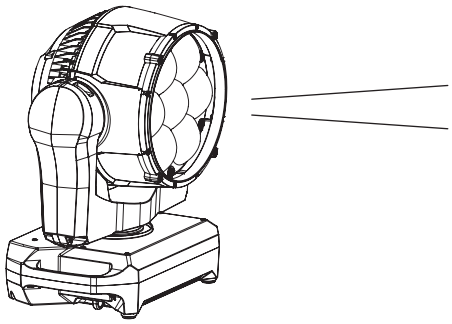

Fixture shown is an example for reference only

Martin®

www.martin.com

MAC Aura™ PXL

Safety and Installation Manual

Martin®

Dimensions

All measurements are given in millimeters

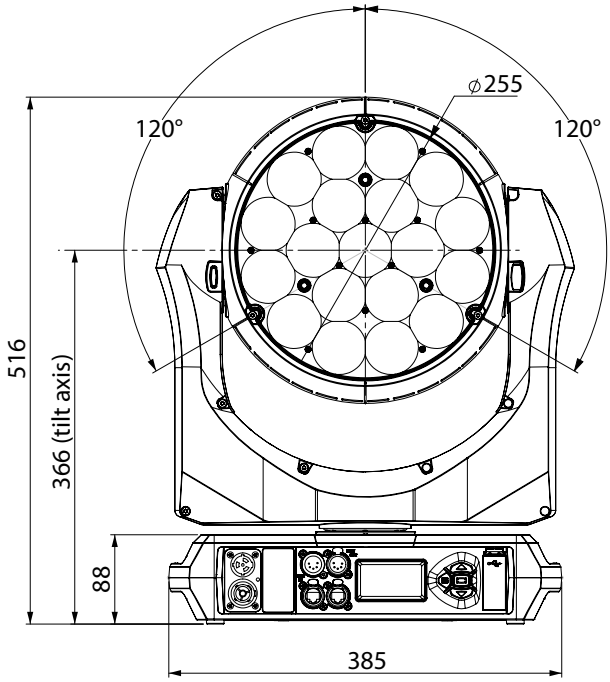

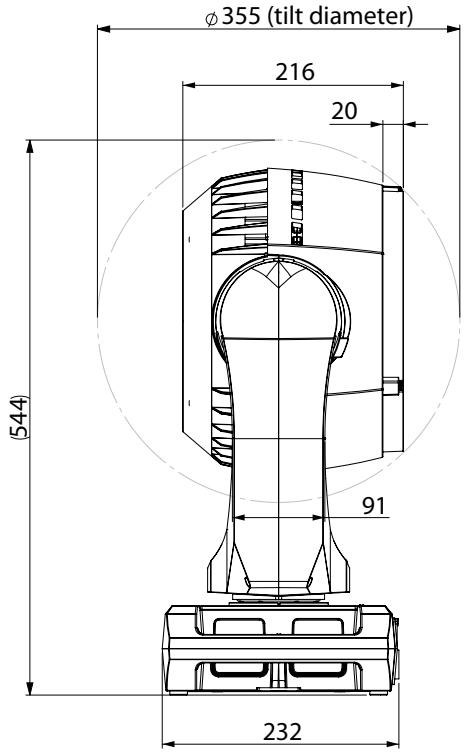

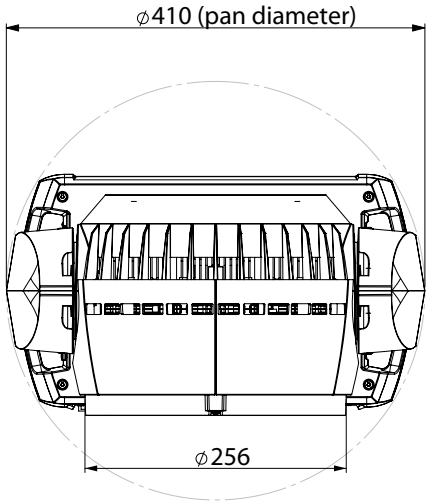

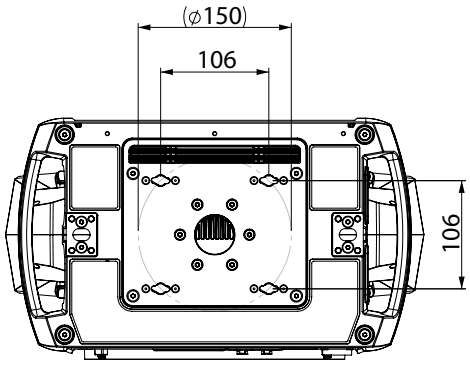

©2020-2026 HARMAN PROFESSIONAL DENMARK ApS. All rights reserved. Features, specifications and appearance are subject to change without notice. HARMAN PROFESSIONAL DENMARK ApS and all affiliated companies disclaim liability for any injury, damage, direct or indirect loss, consequential or economic loss or any other loss occasioned by the use of, inability to use or reliance on the information contained in this document. Martin is a registered trademark of HARMAN PROFESSIONAL DENMARK ApS registered in the United States and/or other countries.

HARMAN PROFESSIONAL DENMARK ApS, Olof Palmes Alle 44, 8200 Aarhus N, Denmark

HARMAN PROFESSIONAL, INC., 8500 Balboa Blvd., Northridge CA 91325, USA

www.martin.com

MAC Aura PXL Safety and Installation Manual (English) Revision F

Contents

Safety Information 4
Introduction 8
Unpacking 8
Packing 8
Physical installation 9
AC power 12
Power input 12
Electrical safety 12
Service and maintenance 14
Tilt lock 14
Cleaning 14
Lubrication 15
Battery replacement 15
Using the fixture 17
Applying power 17
Troubleshooting 18
Compliance and legal 19

Safety Information

WARNING!
Read the safety precautions in this section before installing, powering, operating or servicing this product.

The following symbols are used to identify important safety information on the product and in this document:

DANGER! Safety hazard. Risk of severe injury or death.	DANGER! Hazardous voltage. Risk of lethal or severe electric shock.	WARNING! Fire hazard.	WARNING! Burn hazard. Hot surface. Do not touch.	WARNING! Intense light emission.	WARNING! Refer to user documentation.

Warning! The MAC Aura PXL™ from Martin® contains components that are accessible and live at high voltage while the fixture is connected to power. These components remain under tension for up to 30 minutes after power is disconnected. Only technicians who are authorized by Martin and who have access to the Martin service documentation for the MAC Aura PXL are permitted to open the fixture.

Warning! Risk Group 3 product according to EN 62471 and Risk Group 2 product according to EN 62471, IEC/TR 62778 (see "Protection from eye injury" on page 6 for full details). This product produces intense light output that may be hazardous if suitable precautions are not taken. Do not view the light output with optical instruments or any device that may concentrate the beam.

This product presents risks of severe injury or death due to fire and burn hazards, electric shock and falls if the safety precautions in this manual are not followed.

Read this manual before installing, powering or servicing the fixture. Follow the safety precautions and observe all warnings in this manual, in the MAC Aura PXL User Guide, and printed on the fixture.

The latest versions of this Safety and Installation Manual and the MAC Aura PXL User Guide are available for download from the MAC Aura PXL area of the Martin website at www.martin.com. Before you install, operate or service the MAC Aura PXL, check the Martin website and make sure that you have the latest user documentation for the fixture. Document revisions are indicated at the bottom of page 2.

The MAC Aura PXL is for professional use as a stage light only. It is not for household or general lighting applications. Respect all locally applicable laws, codes and regulations when installing, powering, operating or servicing the fixture.

Install, operate and service Martin products and accessories only as directed in their user documentation, or you may create a safety hazard or cause damage that is not covered by product warranties.

The latest software, manuals and other documentation for all Martin products are available for download at www.martin.com

Technical Support

If you have questions about how to install or operate the fixture safely, please contact Harman Professional Technical support:

- For technical support in North America, please contact: HProTechSupportUSA@harman.com
  Phone: (844) 776-4899
- For technical support outside North America, please contact your national distributor.

PROTECTION FROM ELECTRIC SHOCK

- The fixture has an ingress protection rating of IP20. Do not expose it to rain or moisture.
- Do not remove any cover from the fixture except as described under “Service and maintenance” on page 14.
- Disconnect the fixture from AC mains power before servicing it and when it is not in use.
- Ensure that the fixture is electrically connected to ground (earth).
- Use only a source of AC mains power that complies with local building and electrical codes, that is rated to safely supply the current that you will draw from it, and that has both overload and ground-fault (earth-fault) protection.
- The fixture accepts AC mains power at 100-240 V (nominal), 50/60 Hz. Do not connect the fixture to power that is not within this range.
- The fixture has a maximum total power consumption of 560 W.
- The fixture draws a maximum total current of 6.4 A at 100-120 V and a maximum total current of 2.8 A at 200-240 V.
- The fixture draws a typical half-cycle RMS inrush current of 15.9 A for the first 10 milliseconds when mains power is first applied to the fixture at 230 V, 50 Hz.
- The voltage and frequency at the fixture’s power throughput socket are the same as that applied at the power input socket.
- Do not connect devices to power in a chain that will exceed the electrical ratings of any cable or connector used in the chain.
- Power input and throughput cables must be rated 16 A minimum, 12 AWG or 2.5 mm^2 minimum conductor size and heat-resistant to 90° C (194° F) minimum. Cables must have three conductors and an outer cable diameter of 6 - 12 mm (0.24 - 0.47 in.). In North America the cable must be UL/CSA-recognized, hard usage, type SJT, SJOOW or better. In the EU, the cable must be type H05VV-F, H07RN-F or better.
- Connect only a Neutrik powerCON TRUE1 TOP NAC3FX-W cable connector to the power input socket. Connect only a Neutrik powerCON TRUE1 TOP NAC3MX-W cable connector to the power throughput socket.
- Before connecting any devices to the fixture’s power throughput socket, check the maximum current draw of all the devices that you will connect to power in a chain. Do not exceed a total of 16 amps maximum when you add together the current draw for the entire chain, including the first device in the chain.
- If you relay power from one fixture to another using power throughput sockets, observe the following safety limits, or you may create a risk of fire and electric shock:
  - Do not connect more than two (2) MAC Aura PXL fixtures in total to each other in an interconnected chain when supplying the fixture with mains power from 100 V to 120 V.
  - Do not connect more than five (5) MAC Aura PXL fixtures in total to each other in an interconnected chain when supplying the fixture with mains power from 200 V to 240 V.
- Before using the fixture, check that all power distribution equipment, connectors and cables are in perfect condition and rated for the current requirements of all connected devices.
- Isolate the fixture from power immediately if the power plug or any seal, cover, cable, or other component is damaged, defective, deformed, wet or showing signs of overheating. Do not reapply power until repairs have been completed.
- The DMX and Ethernet transceivers of the fixture are isolated/SELV to prevent ground loops and for safety reasons.
- The MAC Aura PXL contains components that are accessible and live at high voltage while the fixture is connected to power and that remain under tension for 30 minutes after power is disconnected. Only technicians who are authorized by Martin and who have the Martin service documentation for the MAC Aura PXL are permitted to open the fixture.
- Refer any service operation not described in this manual or in the MAC Aura PXL User Guide to Martin Service or an authorized Martin Service partner.
- The light source contained in this fixture shall be replaced by Martin Service or an authorized Martin Service partner only.
- Do not use this equipment at an altitude of more than 2000 m (6570 ft.) above sea level.

PROTECTION FROM BURNS AND FIRE

- The exterior of the fixture becomes hot during use. After 5 minutes of operation a surface temperature of 53° C (128° F) shall be expected. The maximum steady state surface temperature is also 53° C (128° F). Avoid contact by persons and materials.
- Allow the fixture to cool for at least 30 minutes before handling.
- Keep all combustible materials (e.g. fabric, wood, paper) at least 0.2 m (8 in.) away from the fixture.
- Keep flammable materials well away from the fixture.
- Ensure that there is free and unobstructed airflow around the fixture.
- Provide a minimum clearance of 0.2 m (8 in.) around fans and air vents.
- Do not illuminate surfaces within 2.4 m (7.9 ft.) of the fixture.
- Do not expose the front glass to sunlight or any other strong light source from any angle. Lenses can focus the sun's rays inside the fixture, creating a potential fire hazard.
- Do not attempt to bypass thermostatic switches or fuses.
- Do not operate the fixture if the ambient temperature (Ta) exceeds 40° C (104° F).
- Do not modify the fixture in any way not described in this manual or the fixture's User Guide or install other than genuine Martin parts. Do not stick filters, masks or other materials onto any lens or other optical component. Use only accessories approved by Martin to mask or modify the light beam.

PROTECTION FROM EYE INJURY

- Do not stare at the light source.
- Do not look directly into the fixture's light output.
- Do not look at LEDs with magnifiers, telescopes, binoculars or similar optical instruments that may concentrate the light output.
- Ensure that persons are not looking at the fixture when the fixture lights up suddenly. This can happen when power is applied, when the fixture receives a DMX signal, or when certain control menu items are selected.
- Disconnect the fixture from power at all times when the fixture is not in use.
- Provide well-lit conditions to reduce the pupil diameter of anyone working on or near the fixture.
- This fixture corresponds to Risk Group 3 according to EN 62471 when all photobiological risks are considered and Risk Group 2 according to IEC/TR 62778 for blue light only. It emits possibly hazardous optical radiation.
- The fixture falls into the Risk Group categories shown below according to both EN 62471 and IEC/TR 62778 under worst-case conditions:

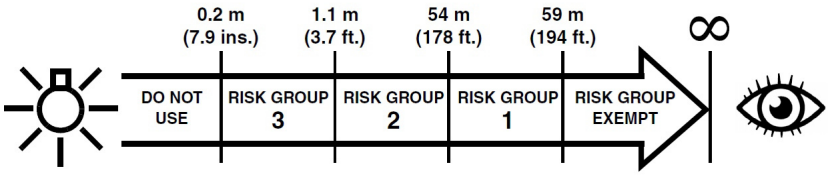

- At a distance of less than 1.1 m (3.7 ft.) from the fixture, the light output can potentially cause eye or skin injury before an exposed person's natural aversion responses (blink reflex and reaction to skin discomfort) can protect them. At distances greater than 1.1 m (3.7 ft.), potential eye and skin injury hazards from the light output are normally prevented by natural aversion reflexes.
- Position the fixture so that persons cannot be exposed to the fixture's light output at a distance of less than 1.1 m (3.7 ft.) from the fixture, and so that prolonged staring into the light output at less than 54 m (178 ft.) from the fixture is not expected.

PROTECTION FROM INJURY

- Fasten the fixture securely to a fixed surface or structure when in use. The fixture is not portable when installed.
- Do not lift or carry the fixture alone.
- Use two evenly spaced omega brackets with clamps to suspend the fixture from rigging structures. Do not use only one clamp.
- When clamping the fixture to a truss or other supporting structure, use two half-coupler clamps. Do not use G-clamps, quick-trigger clamps or any other type of clamp that does not completely encircle the supporting structure when fastened.
- The fixture weighs 15.6 kg (34.4 lbs.). When suspending the fixture, check that the supporting structure and all hardware used to suspend the fixture can hold at least six (6) times the weight of all devices suspended from them and that the installation respects all similar safety factors that are required by

locally applicable regulations. Check that the structure and hardware are in perfect condition and suitable for their purpose.

- If the fixture is installed in a location where it may cause injury or damage if it falls, install as described in this manual a secondary attachment such as a safety cable that is approved by an official body such as TÜV as a safety attachment for the weight that it secures. The safety cable must comply with EN 60598-2-17 Section 17.6.6 or BGV C1 / DGUV 17, and must be capable of bearing a static suspended load at least six times (or more if required by locally applicable regulations) the weight that it secures.
- Eliminate as much slack as possible in the safety cable (by looping it more than once around the rigging truss, for example). Make sure that, if the primary attachment fails, the fixture cannot fall more than 20 cm (8 inches) maximum before the safety cable catches it.
- If the safety cable attachment point becomes deformed, do not suspend the fixture. Have the fixture repaired by an authorized Martin service partner.
- Check that all external covers and rigging hardware are securely fastened.
- Block access below the work area and work from a stable platform whenever installing, servicing or moving the fixture.
- Allow enough clearance around the head to ensure that it cannot collide with a person or object such as another fixture when it moves.

Introduction

Thank you for selecting the MAC Aura PXL from Martin®. This moving-head fixture is the world's first wash light to offer dual- layer individual control of every one of its pixels, including those in the Aura backlight layer.

This Safety and Installation Manual is supplied with the fixture. It gives details of installing and servicing the fixture. The MAC Aura PXL User Guide, containing full instructions to help you set up, control and monitor the fixture, is available for download from the MAC Aura PXL area of the Martin website at www.martin.com. If you have any difficulty locating this document, please contact your Martin supplier for assistance. The MAC Aura PXL area of the Martin website also contains information to help you order accessories such as cables, flightcases etc.

Before installing, operating or servicing the MAC Aura PXL, please check the fixture's area of the Martin website at www.martin.com and make sure that you have the latest user documentation for the product.

Full product specifications are not included in the fixture's user documentation. You can find these in the MAC Aura PXL area of the Martin website.

For the latest firmware updates, documentation, and other information about this and all Martin products, please visit the Martin website at http://www.martin.com

Unpacking

The MAC Aura PXL is packed in a cardboard box that is designed to protect the fixture during shipment. Two packaging options are available in the cardboard box – the fixture can be supplied in either:

- expanded polystyrene that is not intended for re-use, or
- a SIP (Superior Impact Protection) insert that is designed to be installed in the 3-unit MAC Aura PXL flightcase or custom-made flightcases.

Tilt lock

Release the tilt lock before applying power to the fixture.

See Figure 1. Release the tilt lock by pushing the lock in towards the yoke (you can reapply the tilt lock by first checking that the power is off and then pushing the lock back in towards the yoke from the other side).

Figure 1: Tilt lock

Packing

Important! ***Allow the fixture to cool and release the tilt lock before packing it in its flightcase.***

A rugged three-unit flightcase is available from Martin for the MAC Aura PXL. The flightcase accepts durable molded SIP (Superior Impact Protection) foam inserts that are supplied in cardboard boxes with fixtures if you select the SIP option at time of ordering.

The SIP inserts are designed to protect the head without the tilt lock (see Figure 1) applied. Release the tilt lock before putting a fixture into a flightcase for transport. Leaving the tilt lock applied may cause damage that is not covered by the product warranty.

Physical installation

Warning! Read the "Safety Information" section starting on page 4 before installing the fixture.

Warning! The MAC Aura PXL has a powerful pan motor. The torque reaction when the head is panned suddenly can cause the base to move if the fixture is standing unsecured on a surface. Do not apply power to the MAC Aura PXL unless the base is securely fastened to a surface or to rigging hardware.

Warning! Use two clamps to rig the fixture. Do not hang the fixture from only one clamp. Lock each clamp with both 1/4-turn fasteners. Fasteners are locked only when turned a full 90° clockwise.

Warning! When suspending the fixture above ground level, secure it against failure of primary attachments by attaching a safety cable that is approved as a safety attachment for the weight of the fixture to the attachment point in the base. Do not use the carrying handles for secondary attachment.

Warning! When clamping the fixture to a truss or other structure at any other angle than with the yoke hanging vertically downwards, use two clamps of half-coupler type. Do not use any type of clamp that does not completely encircle the structure when fastened.

Warning! Position or shade the head so that the front of the head will not be exposed to sunlight or another strong light source from any angle – even for a few seconds. See Figure 2. The MAC Aura PXL's lens array can focus the sun's rays, creating a potential fire hazard and causing damage.

Important! Do not point the output from other lighting fixtures at the MAC Aura PXL, as powerful light can damage the display.

See Figure 2. Lenses can focus sunlight and strong light, presenting a risk of fire and damage to the fixture. Shield or shade the head if necessary.

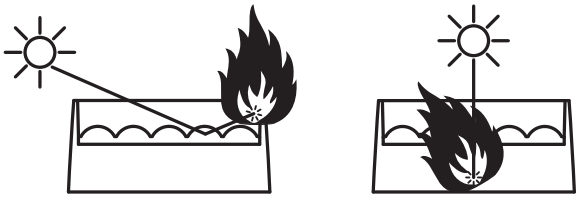

Figure 2: Potential sunlight damage

The MAC Aura PXL can be fastened to a surface such as a stage or clamped to a truss in any orientation. Clamps must be half-coupler type (see Figure 4) or equivalent type that fully encircles the truss unless the fixture is installed with the yoke hanging vertically downwards, in which case other clamp types that are approved for the supported weight may be used.

The mounting points in the base allow omega brackets and rigging clamps to be fastened as shown in Figure 3.

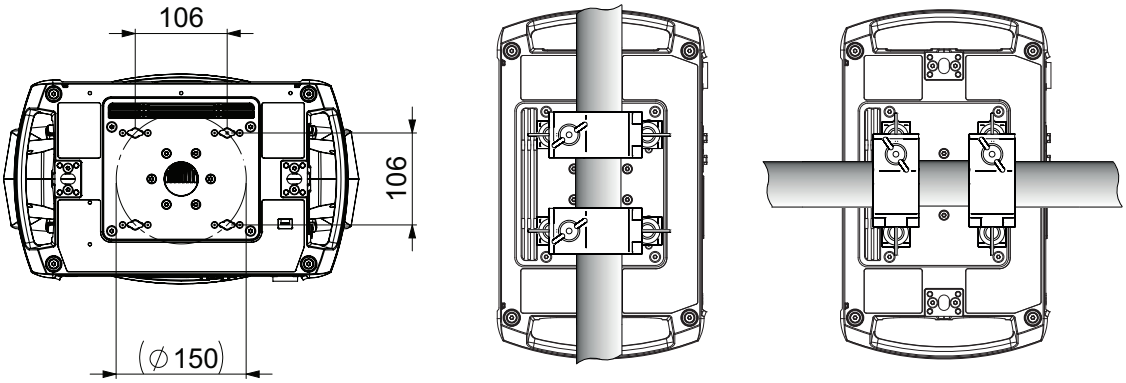

Figure 3: Clamp bracket positions

Clamping the fixture to a truss

1. Check that all rigging hardware is undamaged and can bear at least six (6) times the weight of the fixture or as required by locally applicable regulations. Check that the supporting structure can safely bear the weight of all installed fixtures, clamps, cables, auxiliary equipment, etc. and complies with locally applicable regulations.
2. Bolt each rigging clamp securely to an omega bracket with an M12 bolt (minimum grade 8.8) and self-locking nut.

Half-coupler rigging clamp

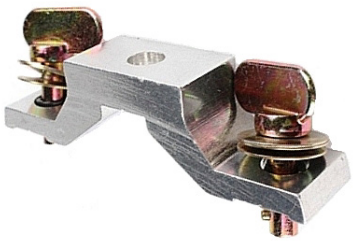

Omega bracket for rigging clamp attachment

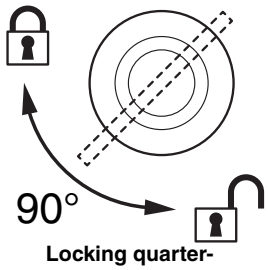

Locking quarter-turn fasteners

Figure 4: Martin rigging hardware

3. See Figure 3 on page 10. Align the first clamp and bracket with 2 mounting points in the base, and engage both the clamp bracket's quarter-turn fasteners in corresponding sockets in the base. See Figure 4. Turn the levers on the quarter-turn fasteners a full 90° clockwise to lock. Repeat for the second clamp.
4. Block access under the work area. See Figure 5. Note the position of the arrow marked **FRONT** on the base of the fixture. Working from a stable platform, hang the fixture on the truss with the arrow marked **FRONT** facing towards the area to be illuminated. Tighten the rigging clamps.
5. See Figure 6. Install a safety cable that is approved as a safety attachment for the weight of the fixture by looping it through a safety attachment point (arrowed) in the bottom of the

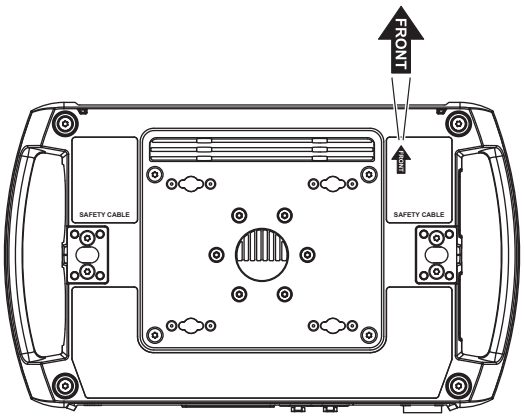

Figure 5: Front of fixture

base and around a secure anchoring point so that the safety cable will catch the fixture if a primary attachment fails. Remove as much slack as possible from the safety cable (by looping it more than once around the truss bar, for example).

6. Check that the tilt lock is released. Check that there are no combustible materials within 0.2 m (8 in.) or surfaces to be illuminated within 2.4 m (7.9 ft.) of the fixture, and that there are no flammable materials nearby.
7. Check that there is no possibility of heads or yokes colliding with other fixtures.
8. Check that other lighting fixtures cannot project light at the MAC Aura PXL, as powerful illumination can damage the fixture's display.

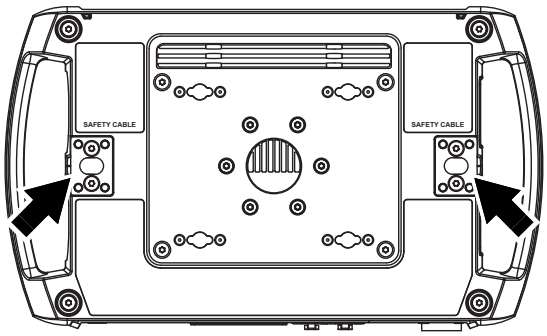

Figure 6: Safety cable attachment points

AC power

Warning! Read the "Safety Information" section starting on page 4 before connecting the fixture to AC mains power.

For protection from electric shock, the fixture must be electrically connected to ground (earth). The AC mains power distribution circuit must be equipped with a fuse or circuit breaker and ground-fault (earth-fault) protection.

Power input

Important! Connect the MAC Aura PXL directly to AC mains power. Do not connect it to a dimmer system; doing so may damage the fixture.

Electrical safety

The MAC Aura PXL features an auto-sensing switch-mode power supply that automatically adapts to AC mains power at 100-240 V (nominal), 50/60 Hz. Do not connect the fixture to power that is not within this range.

The MAC Aura PXL requires a power input cable with a Neutrik powerCON TRUE1 TOP NAC3FX-W female cable connector for AC mains power input. The cable must meet the requirements listed under "Protection from electric shock" on page 5. Martin can supply suitable cables with female TRUE1 TOP input connectors 1.5 m (4.9 ft.) or 5 m (16.4 ft.) long. Alternatively, Martin can supply loose female TRUE1 TOP input connectors (see Martin website at www.martin.com).

Maximum current draw is as follows:

- At 100-120 V~: 6.4 A
- At 208-240 V~: 2.8 A

Typical half-cycle RMS inrush current: 15.9 A at 230 V, 50 Hz.

Typical earth-leakage current: 0.36 mA.

Connection to an AC mains power source

The power cable can be hard-wired to a building installation circuit or fitted with a mains plug (cord cap) to allow connection to local AC mains power outlets.

If you install a mains plug on the power cable, install a grounding-type (earthed) plug rated minimum 16A, 250 V (example rating: EN 60309-2 CEE 2P+E 16A/250VAC), following the plug manufacturer's instructions. Table 1 shows some possible mains power pin identification schemes; if the pins are not clearly identified, or if you have any doubts about proper installation, consult a qualified electrician.

Wire Color (US)	Wire Color (EU)	Pin	Symbol	Screw (US)
black	brown	live	**L**	yellow or brass
white	blue	neutral	**N**	silver
green	yellow/green	ground (earth)	⏚ or ⏚	green

Table 1: Cord cap (mains plug) connections

If you need to install a Neutrik powerCON TRUE1 TOP connector on a power cable, follow the instructions on the Neutrik website at www.neutrik.com.

Linking fixtures to power in a chain

If you obtain a 16 A-rated power input cable and 16 A-rated power relay cables from Martin (see the Martin website at www.martin.com), you can relay mains power from one fixture to another by connecting fixtures to power in a linked daisy-chain, MAINS OUT throughput socket to MAINS IN input socket. If you create a linked daisy-chain like this, you must respect the following safety limits, or you may create a risk of fire and electric shock:

Using 16 amp-rated power input and power relay cables from Martin, you can link:

- maximum two (2) MAC Aura PXL fixtures total in one chain at 100-120 V, or
- maximum five (5) MAC Aura PXL fixtures total in one chain at 200-240 V.

If you connect multiple fixtures to power in a daisy-chain, we recommend that you draw power from a circuit that is protected by a type D MCB (Miniature Circuit Breaker). This will avoid the breaker tripping unnecessarily because of inrush current. If the only available power circuits have type C MCBs, you may need to connect maximum four (4) fixtures per daisy-chain at 200-240 V in order to avoid tripping breakers unnecessarily.

Connecting to power

Warning! The MAC Aura PXL does not have a power On/Off switch. As soon as you connect an energized power input cable to the fixture or apply power to a power input cable that has already been connected, the fixture will power up: check that there is no safety risk from head movement or intense light output.

To apply power to the MAC Aura PXL:

1. Check that the tilt lock is released and that the base is held securely. Be prepared for the fixture to light up and the head to move suddenly when power is applied.
2. See Figure 7. line up the keys in the power input cable's TRUE1 TOP connector with the keyways in the MAINS IN socket (arrowed). Insert the connector into the socket and twist clockwise to engage.

   If the connector seems difficult to twist, remove it from the socket, check that you have lined up the keyways correctly and try again – do not use excessive force. Make sure that the connector latch clicks and that the connector is locked into the socket.

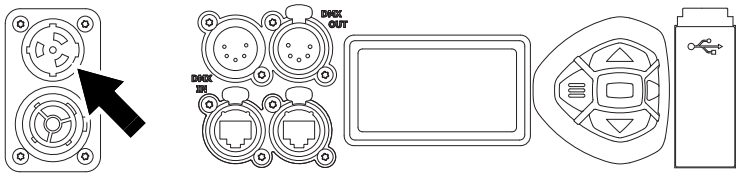

Figure 7: Mains input socket

3. Apply power to the power input cable to power the fixture on.

To disconnect the MAC Aura PXL from power, pull the release latch on the connector towards you to unlock the connector, twist the connector counter-clockwise, and then withdraw it from the MAINS IN socket.

Service and maintenance

Warning! Read "Safety Information" on page 4 before servicing the MAC Aura PXL.

Warning! Disconnect the fixture from AC mains power and allow to cool for at least 30 minutes before handling. Do not stare into the light output. Be prepared for the fixture to light and move suddenly when connected to power.

Warning! The MAC Aura PXL contains components that are accessible and live at high voltage while the fixture is connected to power and that remain under tension for 30 minutes after power is disconnected. Only technicians who are authorized by Martin and who have the Martin service documentation for the MAC Aura PXL are permitted to open the fixture. Users may carry out external cleaning as described in this section, following the warnings and instructions provided, but any service operation not described in this manual or in the fixture's User Guide must be referred to a qualified service technician.

Important! Excessive dust, smoke fluid, and particle buildup degrades performance, causes overheating and will damage the fixture. Damage caused by inadequate cleaning or maintenance is not covered by the product warranty.

The user must clean the MAC Aura PXL periodically to maintain optimum performance and cooling. The user may also upload firmware (fixture software) to the fixture via the DMX data input port, USB port or Ethernet port using firmware and instructions from Martin. All other service operations on the MAC Aura PXL must be carried out by Martin, its approved service agents or trained and qualified personnel using the official Martin service documentation for the MAC Aura PXL.

Installation, on-site service and maintenance can be provided worldwide by the Martin Professional Global Service organization and its approved agents, giving owners access to Martin's expertise and product knowledge in a partnership that will ensure the highest level of performance throughout the product's lifetime. Please contact your Martin supplier for details.

It is Martin policy to apply the strictest possible calibration procedures and use the best quality materials available to ensure optimum performance and the longest possible component lifetimes. However, optical components are subject to wear and tear over the life of the product, resulting in gradual changes in color over many thousands of hours of use. The extent of wear and tear depends heavily on operating conditions and environment, so it is impossible to specify precisely whether and to what extent performance will be affected. However, you may eventually need to replace optical components if their characteristics are affected by wear and tear after an extended period of use and if you require fixtures to perform within very precise optical and color parameters.

Tilt lock

The tilt position of the head can be locked for service. See Figure 1 on page 8. Push the lock in towards the yoke in one direction to lock the head and back in from the other side to unlock the head.

Important! ***Release the tilt lock before applying power to the fixture and before packing the fixture in its flightcase.***

Cleaning

Regular cleaning is very important for fixture life and performance. Buildup of dust, dirt, smoke particles, fog fluid residues, etc. degrades the fixture's light output and cooling ability.

Cleaning schedules for lighting fixtures vary greatly depending on the operating environment. It is therefore impossible to specify precise cleaning intervals for the MAC Aura PXL. Cooling fans suck in airborne dust and smoke particles, and in extreme cases fixtures may require cleaning after surprisingly few hours of operation. Environmental factors that may result in a need for frequent cleaning include:

- Use of smoke or fog machines.
- High airflow rates (near air conditioning vents, for example).
- Presence of cigarette smoke.

- Airborne dust (from stage effects, building structures and fittings or the natural environment at outdoor events, for example).

If one or more of these factors is present, inspect fixtures within their first few hours of operation to see whether cleaning is necessary. Check again at frequent intervals. This procedure will allow you to assess cleaning requirements in your particular situation. If in doubt, consult your Martin dealer about a suitable maintenance schedule.

Follow these precautions when cleaning the fixture:

- Work in a clean, dry, well-lit area.
- Use gentle pressure only. Do not use any product that contains abrasives. Do not use solvents. Use care when cleaning optical components: surfaces are fragile and easily scratched.
- Use a vacuum cleaner – do not use a pressurized air jet. A vacuum cleaner will remove dirt from the fixture and from the area where you are working. An air jet may blow dirt into the fixture, and this can cause visible objects in light output or on the front lens array and possibly even damage to the fixture.
- Do not apply a strong vacuum directly to a cooling fan, as the strong airflow may spin the fan blades fast enough to cause damage. Instead, hold the vacuum cleaner nozzle a few centimeters away from the fan and dislodge dust with a soft brush.

Cleaning procedure

To clean the fixture:

1. Disconnect the fixture from power and allow it to cool for at least 30 minutes.
2. Vacuum dust and loose particles from the outside of the fixture and the air vents at the back and sides of the head and in the base.
3. Clean the front glass on the front of the head by wiping gently with a soft, clean, lint-free cloth moistened with a weak detergent solution. Do not rub the surface hard: lift particles off with a soft repeated press. Dry with a soft, clean, lint-free cloth or low-pressure compressed air. Remove stuck particles with an unscented tissue or cotton swab moistened with glass cleaner or distilled water.
4. Check that the fixture is dry before reapplying power.

Lubrication

The MAC Aura PXL does not require lubrication under normal circumstances. Moving parts can be checked and a long-lasting Teflon-based grease reapplied by a Martin service partner if necessary.

Battery replacement

Warning! ***Disconnect the fixture from AC power before replacing its battery. Do not attempt to recharge the battery, or you may create a risk of fire or explosion.***

The MAC Aura PXL has a non-rechargeable 3-volt lithium battery that provides power to the control panel and display when the fixture is not connected to AC mains power. If the battery runs flat, you must replace it. Do not attempt to recharge it.

See Figure 8. The battery is located in the USB port / battery compartment next to the control panel on the base of the fixture.

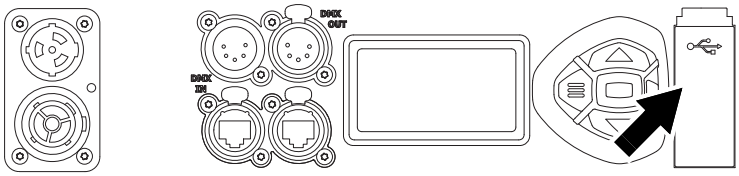

Figure 8: Battery compartment

To replace the battery:

1. Order Martin P/N 05801011 (CR123A, 3 V lithium battery).
2. Disconnect the fixture from AC mains power and allow to cool.
3. See Figure 9. Push down on the locking tab (arrowed) with a screwdriver to release the USB port / battery compartment cover and remove the cover.
4. Remove the used battery and insert the new one, respecting the correct battery polarity (positive terminal facing downwards, away from the head).
5. Reinstall the compartment cover and check that it is closed securely before reapplying power.
6. Dispose of the used battery responsibly: send to an authorized waste recycling and disposal center.

Figure 9: Battery compartment

Using the fixture

Before using the fixture, download and read the latest version of the MAC Aura PXL User Guide from the MAC Aura PXL area of the Martin website at www.martin.com. The User Guide contains details of:

- The effects available in the fixture.
- The control options available using DMX, RDM, Art-Net, sACN and/or P3.
- The setup, monitoring and control options available using the onboard control and display panel.
- Software service functions.

Applying power

Warning! Before applying power to the fixture:

- ***Read the safety information section of this manual starting on page 4.***
- ***Read "Connecting to power" on page 13.***
- ***Check that the installation is safe and secure.***
- ***Check that the base is fastened securely so that the torque reaction when the head moves will not cause the base to move.***
- ***Check that the head tilt lock is released (see "Tilt lock" on page 8).***
- ***Be prepared for the fixture to light up suddenly. Check that no-one is looking at the fixture from close range.***
- ***Be prepared for the head to move suddenly. Check that there will be no risk of collision with persons or objects.***

The MAC Aura PXL does not have an On/Off switch. To apply power to the fixture, apply power to the power input cable.

Troubleshooting

Problem	Probable cause(s)	Remedy
One or more of the fixtures is completely dead.	No power to fixture.	Check that power is switched on and cables are plugged in.
	Fuse blown or internal fault.	Contact Martin Service or authorized service partner. Do not remove base or yoke covers, attempt to replace a fuse or carry out any repairs or service that are not described in this Safety and Installation Manual unless you have both authorization from Martin and official Martin service documentation.
Fixtures reset correctly but respond erratically or not at all to the controller.	Bad data link.	Inspect connections and cables. Correct poor connections. Repair or replace damaged cables.
	Data link not terminated.	Insert DMX termination plug in data output socket of the last MAC Aura PXL on the data link.
	Incorrect addressing of fixtures.	Check fixture address and protocol settings.
	One of the fixtures is defective and is disturbing data transmission on the link.	Unplug the XLR in and out connectors and connect them directly together to bypass one fixture at a time until normal operation is regained. Have the fixture serviced by a qualified technician.
Timeout error after fixture reset.	Zoom, pan or tilt requires mechanical adjustment.	Check fixture's stored error messages for more information. Contact Martin Service or authorized Martin service partner.
Zoom loses position.	Zoom car requires cleaning, adjustment, or lubrication.	Check fixture's stored error messages for more information. Contact Martin Service or authorized Martin service partner.
Light output cuts out intermittently.	Fixture is too hot.	Check fixture's stored error messages for more information. Allow fixture to cool. Clean fixture. Reduce ambient temperature.

Table 2: Troubleshooting

Compliance and legal

Approvals

This product has been tested and found to comply with the following standards:

- Global CB Certification/IECEE: IEC 60598-2-17 (IEC 60598-1)
- EU safety: EN 60598-2-17 (EN 60598-1), EN 62471, EN 62493
- EU EMC: EN 55015; EN 55032; EN 55035; EN 61547; EN 61000-3-2; EN 61000-3-3
- US safety: UL 1573
- US EMC: FCC Part 15 Class B
- Canadian safety: CSA C22.2 No. 166
- Canadian EMC: ICES-003 Class B, ICES-005 Class B
- Australia/NZ: RCM
- United Kingdom: UKCA

FCC Compliance

This equipment has been tested and found to comply with the limits for a Class B digital device, pursuant to part 15 of the FCC Rules. These limits are designed to provide reasonable protection against harmful interference when the equipment is operated in a commercial environment. This equipment generates, uses and can radiate radio frequency energy and, if not installed and used in accordance with the instructions, may cause harmful interference to radio communications. Operation of this equipment in a residential area is likely to cause harmful interference, in which case the user will be required to correct the interference at his own expense.

Supplier's Declaration of Conformity

Harman Professional, Inc. have issued an FCC Supplier's Declaration of Conformity for this product. The Declaration of Conformity is available for download from the MAC Aura PXL area of the Martin website at www.martin.com

Canadian Interference-Causing Equipment Regulations - *Règlement sur le Matériel Brouilleur du Canada*

This Class B digital apparatus meets all requirements of the Canadian Interference-Causing Equipment Regulations.
Cet appareil numérique de la classe A respecte toutes les exigences du Règlement sur le Matériel Brouilleur du Canada.

CAN ICES-003 (B) / NMB-003 (B); CAN ICES-005 (B) / NMB-005 (B)

EU Declaration of Conformity

An EU Declaration of Conformity covering this product is available for download from the MAC Aura PXL area of the Martin website at www.martin.com.

Hibernation Mode

'Hibernation mode' is intended as an option to reduce the consequences of having a product fully operational in dirty environments or in situations where noise level is crucial such as during live performances. The small reduction in energy consumption in Hibernation Mode is only a subordinate effect.

Intellectual Property Rights

Martin® MAC Aura PXL products are covered by one or more of the following patents:

BR 112012027037-0, CN 201410742540.7, CN 201410742572.7, CN 201480054899.3, CN 201510276233.9, CN 201510329396.9, CN 201510601081.5, CN 201610424237.1, CN ZL200580017895.9, CN ZL200810125883.3, CN ZL200810125884.8, CN ZL200810128720.0, CN ZL200810128776.6, CN ZL200810128777.0, CN ZL200810128784.0, CN ZL200810131481.4, CN ZL200810144668.8, CN ZL200880112488.X, CN ZL200880114210.6, CN ZL200980128546.2, CN ZL200980134093.4, CN ZL200980134469.1, CN ZL200980150776.9, CN ZL201080025103.3, CN ZL201080030180.8, CN ZL201080031189.0, CN ZL201080039052.X, CN ZL201080039458.8, CN ZL201080059685.7, CN ZL201080059701.2, CN ZL201080059935.7, CN ZL201080060235.X, CN ZL201110054524.5, CN ZL201180006613.0, CN ZL201180007013.6, CN ZL201180014884.0, CN ZL201180018962.4, CN ZL201180018964.3, CN ZL201180020424.9, CN ZL201180020462.4, CN ZL201180042758.6, CN ZL201180043192.9, CN ZL201180061956.7, CN ZL201280028484.X, CN ZL201280028487.3, CN ZL201280028546.7, CN ZL201280031840.3, CN ZL201280042866.8, CN ZL201280051693.6, CN ZL201280062887.6, CN ZL201310027943.9, CN ZL201310046301.3, CN ZL201310047318.0, CN ZL201310047379.7, CN ZL201310090258.0, CN ZL201310659104.9, CN ZL201380004370.6, CN ZL201380064467.6, CN ZL201410332055.2, CN ZL201410676196.6, CN ZL201410677173.7, CN ZL201410740291.8, CN ZL201410742583.5, CN ZL201480032085.X, CN ZL201510158768.6, CN ZL201510323275.3, CN ZL201510556631.6, CN ZL201610284329.4, CN ZL201610493268.2, CN ZL201920425584.5, DK 176875, DK 177371, DK 177534, DK 177579, DK 177878, DK 178386, DK 201400085, DK 2881650, DK 2881652, EP 1234197, EP 1747399, EP 1765480, EP 1898145, EP 1958483, EP 2058586, EP 2091302, EP 2096609, EP 2112431, EP 2113714, EP 2117284, EP 2136136, EP 2195573, EP 2324282, EP 2326150, EP 2332166, EP 2341994, EP 2359056, EP 2434636, EP 2442010, EP 2443381, EP 2454626, EP 2475931, EP 2475932, EP 2516921, EP 2536974, EP 2550686, EP 2561272, EP 2561273, EP 2561274, EP 2614292, EP 2614298, EP 2623855, EP 2623856, EP 2623860, EP 2629000, EP 2642827, EP 2718619, EP 2718620, EP 2718624, EP 2769143, EP 2795185, EP 2828577, EP 2837987, EP 2876473, EP 2876474, EP 2881650, EP 2881653, EP 2889534, EP 2927579, EP 2950618, EP 2953123, EP 2955626, EP 2988064,

EP 2995852, EP 3052858, EP 3081853, EP 3089553, EP 3106744, EP 3112745, EP 3112746, EP 3113157, EP 3203306, EP 3217083, EP 3290783, EP 3343103, EP 3356729, EP 3362738, EP 3457023, JP 5467175, JP 5587494, JP 5624677, JP 5756513, JP 5756543, RU 2527055, RU 2537700, RU 2539316, US 10/132473, US 10030853, US 10047916, US 10072834, US 10077881, US 10077885, US 10161598, US 10187949, US 10190751, US 10257909, US 10340782, US 10379804, US 10502391, US 10502398, US 10551028, US 10571087, US 10571088, US 10641463, US 6601973, US 6687063, US 6971770, US 7222997, US 7478916, US 7498756, US 7559676, US 7654693, US 7699506, US 7703948, US 7789525, US 7789533, US 7789543, US 7872585, US 7893633, US 7905630, US 7942535, US 7954981, US 7963507, US 7990673, US 8042972, US 8287144, US 8449141, US 8469546, US 8474986, US 8482226, US 8596836, US 8664858, US 8702276, US 8708535, US 8727570, US 8736527, US 8746891, US 8757809, US 8764229, US 8764250, US 8770762, US 8783895, US 8801225, US 8888294, US 8911120, US 8917980, US 8944640, US 8950895, US 9010967, US 9109788, US 9144120, US 9200776, US 9206962, US 9217551, US 9217559, US 9243760, US 9326347, US 9329379, US 9459001, US 9470397, US 9521721, US 9523806, US 9532422, US 9562672, US 9578713, US 9612380, US 9651222, US 9664361, US 9714745, US 9719668, US 9732942, US 9732950, US 9752748, US 9759528, US 9781779, US 9781808, US 9784436, US 9801259, US 9829174, US 9920914, US 9933137, US 9995456, US 9995463

and/or one or more of these patent applications:

BR 112012027036-2, BR 112012027038-9, CN 103270437, CN 103890485, CN 105280104, CN 106051624, CN 106128313, CN 106322183, CN 106322184, CN 107806572, CN 108027123, CN 108139067, CN 108413343, CN 108770140A, CN 109099392A, CN 109488978A, CN 109931574A, CN 109996989A, CN 110345414A, CN 110469797A, EP 2516923, EP 2517066, EP 2646751, EP 2656123, EP 2953119, EP 2958406, EP 3004732, EP 3091528, EP 3361149, EP 3392556, EP 3499117, EP 3545228, EP 3567302, JP 2019-53982, US 2015/0358555, US 2018/0368217, US 2019/0186720

and/or one or more other intellectual property rights, including one or more intellectual property rights listed on the ‘Legal’ page that can be accessed from the front page of the Martin website at www.martin.com

Disposing of this product

Martin products are supplied in compliance with Directive 2012/19/EC of the European Parliament and of the Council of the European Union on WEEE (Waste Electrical and Electronic Equipment), where applicable.

Help preserve the environment! Ensure that this product is recycled at the end of its life. Your supplier can give details of local arrangements for the disposal of Martin products.

This product contains a lithium battery. Ensure that it is disposed of correctly and responsibly by an authorized recycling or waste disposal center at the end of its life. Where applicable, Martin participates in schemes whose aim is to ensure that local recycling and/or waste disposal centers accept batteries from Martin products.