MAC One Beam
User Manual
with Safety and Installation Manual

Martin®

User documentation revision information

Revision E

Letter of non-objection requirement (USA and Canada) added to Safety and Installation Manual

Revision D

Safety and Installatoin Manual shipped with fixtures for a short period. Not released on Martin website.

Covers firmware version 1.1.x.

User Manual – Added requirement to set Offline Mode to BLACKOUT in Dimming Zones section, page 16. Added warning to 'Stand-alone operation' section that it must be possible for the operator to remotely shut down power

Safety and Installation Manual – Updated information on light output safety and FDA variance requirements. Added warning to provide possibility for the operator to remotely shut down power.

Revision C

Covers firmware version 1.1.x.

User Manual – Added information on visual feedback given by the fixture when programming Dimming Zones. Added information on Offline Mode and requirement to set to BLACKOUT (default option) when people can be closer than 5 m (16.5 ft.) to the fixture.

Safety and Installation Manual – Added information on replacing lithium battery in fixture base.

Revision B

First public release. Covers firmware version 1.0.x

©2026 HARMAN PROFESSIONAL DENMARK ApS. All rights reserved. Features, specifications and appearance are subject to change without notice. HARMAN PROFESSIONAL DENMARK ApS and all affiliated companies disclaim liability for any injury, damage, direct or indirect loss, consequential or economic loss or any other loss occasioned by the use of, inability to use or reliance on the information contained in this document. Martin is a registered trademark of HARMAN PROFESSIONAL DENMARK ApS registered in the United States and/or other countries.

HARMAN PROFESSIONAL DENMARK ApS, Olof Palmes Allé 44, 8200 Aarhus N, Denmark
HARMAN PROFESSIONAL, INC., 8500 Balboa Blvd., Northridge CA 91325, USA

www.martin.com

MAC One Beam User Manual with Safety and Installation Manual, English, P/N 5152316-00 Revision E

Table of contents

Introduction 5
- Before using the product for the first time 5

Connecting to data 6
- Data via DMX cable 6
- Data via Ethernet cable 7

Effects 8
- Beam and Backlight 8
- Shutter 8
- Dimmer 8
- RGB color mixing 8
- Color temperature 8
- Green-magenta shift (tint) control 8
- Virtual color wheel 8
- Pan and Tilt 9
- PWM frequency fine-tuning 9
- Pre-programmed FX 9
- Virtual dimmer enhancer 9

Control panel 10
- Using the control panel 10
- Display sleep 12
- Activating service mode 12

Control options 13
- Fail-safe connection 13
- Data rate 13
- P3 video 13
- P3 Mix 13
- RDM 14

Fixture setup 15
- DMX address 15
- DMX mode 15
- DMX universe 15
- Network settings 15
- Fixture ID 15
- Dimming zones 16
- Pan/tilt inversion 17
- Pan and tilt limits 18
- Pan/tilt speed 18
- Effects speed 18
- Dimming curves 18
- Tungsten emulation 19
- Color mode 19
- Video tracking 19
- DMX reset 19
- Cooling mode 19
- Display options 20

Error mode 20
Hibernation mode 20
Stand-alone operation 21
Offline Mode 22
Backlight in Compact Mode 22
Restoring factory defaults 22
DMX Live 22
Fixture self-testing 23
Manual control 23
Service utilities 24
Status messages 24
Fan clean function 24
Disabling pan and tilt feedback 24
Calibration 24
Calibrating effects via DMX 25
Managing internal modules 26
Fixture information 26
Adjusting settings via DMX 27
Using RDM 27
Martin Companion® and RDM 27
Fixture discovery 27
Supported parameters 28
Example: setting a DMX address 28
RDM utilities 28
RDM Parameter IDs 28
Operating the fixture 32
Controlling via DMX 32
Control menus 33
Service and diagnostic messages 40
Warning messages 40
Error messages 41
DMX protocols 43
Compact DMX Mode 43
Basic DMX Mode 49
Ludicrous DMX Mode 52
Control orientation reference 54
FX Macros 55
Accessories and service procedures 64
Uploading new firmware 64
Fixture-to-fixture firmware uploads 65
Compliance and specifications 66

Introduction

Warning! Before installing, operating or servicing the MAC One Beam lighting fixture, read the latest version of the fixture's Safety and Installation Manual, paying particular attention to the Safety Precautions section. The Safety and Installation Manual is supplied with the fixture and included at the back of this user manual.

Important! Full specifications for MAC One Beam fixtures and accessories are available in the MAC One Beam area of the Martin® website at www.martin.com.

Thank you for selecting the MAC One Beam lighting fixture from Martin.

This User Guide is a supplement to the Safety and Installation Manual that is supplied with the fixture and attached to the back of this User Manual. This combined User Manual plus Safety and Installation Manual is available for download from the MAC One Beam area of the Martin website at www.martin.com. The User Manual contains information that is mainly of interest for lighting designers and operators, whereas the Safety and Installation Manual contains important information for all users, especially installers and technicians.

We recommend that you check the Martin website regularly for updated documentation. We publish revised versions each time we can improve the quality of the information we provide and each time we release new firmware with changes or new features. Each time we revise this guide we list any important changes on page 2 so that you can keep track of updates.

Before using the product for the first time

1. Check the MAC One Beam area of the Martin website at www.martin.com for the most recent user documentation and technical information about the fixture. Martin user manual revisions are identified by the revision letter at the bottom of the inside cover. Read the latest revision of the MAC One Beam Safety and Installation Manual that is included at the end of the User Manual, paying particular attention to the 'Safety Precautions' section.
2. Unpack and ensure that there is no transportation damage before using the fixture. Do not attempt to operate a damaged fixture.
3. Before operating, ensure that the voltage and frequency of the power supply match the power requirements of the fixture.
4. If fixtures are exposed to a sudden temperature change, give them time to warm or cool to the ambient temperature before applying power. This will help avoid damage due to condensation.

Connecting to data

Warning! Before installing the MAC One Beam, read the latest version of the fixture's Safety and Installation Manual that is attached to the User Manual, paying particular attention to the 'Safety Precautions' section. Besides important safety information, the Safety and Installation Manual contains instructions for connecting to AC mains power.

If independent control of a fixture is required, it must have its own DMX channels. Fixtures that are required to behave identically can share the same DMX address and channels.

The number of fixtures that you can connect to DMX data in a daisy chain is limited by the number of DMX channels required by the fixtures. A maximum of 512 channels is available in one DMX universe. To add more fixtures or groups of fixtures when you no longer have enough DMX channels, add a DMX universe and another daisy-chained link.

The MAC One Beam has two pairs of connectors for control data In/Out:

- one pair of locking 5-pin XLR sockets, and
- one pair of etherCON sockets.

Data via DMX cable

The MAC One Beam has 5-pin locking XLR sockets for DMX and RDM input and output via DMX cable. The pin-out on both sockets is:

• Pin 1 to shield

• Pin 2 to data 1 cold (-)

• Pin 3 to data 1 hot (+).

Pins 4 and 5 are not used by the fixture but are bridged between input and output sockets. These pins can therefore be used as a pass-through connection for an additional data signal if required.

Tips for reliable data transmission via DMX cable

- Use shielded twisted-pair high-quality DMX cable.
- 24 AWG cable is suitable for runs up to 300 meters (1000 ft). Heavier gauge cable and/or an amplifier is recommended for longer runs.
- Do not use microphone cable, as standard microphone cable does not have the correct impedance and cannot transmit control data reliably over long runs.
- To split the data link into branches, use an optically isolated splitter-amplifier. Use an RDM-compatible splitter-amplifier if using RDM.
- Do not overload the DMX data link. You can connect up to a maximum of 32 devices on a serial DMX link.
- Install a DMX termination plug at the end of the DMX link.

Connecting to data via DMX cable

To connect the fixture to DMX and/or RDM data carried over DMX cable:

1. Connect the DMX data output from the controller to the fixture's data input (male XLR) socket using good-quality DMX cable.
2. Run DMX cable from the fixture's data output (female XLR) socket to the data input of the next fixture and continue until the link is complete.
3. Terminate the data link by connecting a 120 Ohm, 0.25 Watt resistor between the data 1 hot (+) and cold (-) conductors at the end of the link. If the link is divided into branches using a DMX splitter, terminate each branch of the link.

Data via Ethernet cable

The MAC One Beam has etherCON data sockets that support Art-Net (including RDM), sACN and Martin P3. Either socket can be used for input and the other socket used for throughput. The etherCON data sockets have a fail-safe bypass feature. This means that the fixture will relay a data signal from the socket used for input to the socket used for throughput even if power to the fixture is shut down or lost.

Tips for reliable data transmission via Ethernet cable

- Use shielded twisted-pair Ethernet cable of type S/UTP, SF/UTP, S/FTP or SF/FTP only. The cable must be rated Cat 5e or better.
- The cable shield must be electrically connected to connector housings, and the other devices on the data link must also support shielded connections.
- The MAC One Beam is compatible with 10/100 Mbit Ethernet only. Do not connect the fixture to a network port or device that is fixed to Gigabit Ethernet speed. If you need to integrate an MAC One Beam in a Gigabit Ethernet network, use a network switch to allow the link towards the fixture to operate at 100 Mbit/s Ethernet speed.
- To split the data link into branches, use a standard network switch that is able to operate at 100 Mbit/s towards the fixtures.
- Even though every fixture has a fail-safe bypass mechanism and minimal latency insertion, we recommend that you avoid connecting more than 50 devices in a single daisy-chain or branch.
- Unlike DMX cable, Ethernet cable does not require termination at the end of a daisy-chain of fixtures.

Connecting to data via Ethernet cable

To connect the fixture to Art-Net, sACN or P3 via Ethernet cable:

1. Connect the Ethernet cable to either of the fixture’s etherCON data sockets.
2. Run Ethernet cable from the fixture’s other etherCON data socket to a data socket on the next fixture.
3. Continue connecting data sockets as described above until the link is complete.

Effects

See the ‘DMX protocols’ section starting on page 43 for a full list of the DMX channels and values required to control the different effects.

Beam and Backlight

The MAC One Beam features two light engines:

- The Beam – a 20 W laser-illuminated light engine.
- The Backlight – an array of 24 x 0.25 W RGB LEDs distributed in a circle close to the edge of the front lens. The Backlight array can be controlled separately from the Beam in Basic DMX Mode. The Backlight LEDs can also be controlled individually as 24 separate pixels, each with RGB control, in Ludicrous DMX Mode or via P3 in any DMX mode.

The fixture’s effects can be controlled on the Beam and the Backlight *together* in all the fixture’s DMX Modes and can also be controlled on the Beam and the Backlight *separately* in Basic and Ludicrous DMX Modes.

Shutter

The electronic ‘shutter’ effect provides instant blackout and snap open as well as regular 1–20 Hz or random 0.25–5 Hz variable speed strobe.

Dimmer

Intensity can be adjusted 0-100% using smooth continuous electronic dimming with 16-bit control resolution.

RGB color mixing

Continuous RGB color mixing is available with 16-bit control.

Color temperature

The CTC effect lets you set the color temperature of the white point. Color mixing using RGB is then applied ‘on top of’ this white point.

Green-magenta shift (tint) control

The Green-Magenta shift effect adjusts the tint of the white point.

- At values 127-128, the fixture outputs white on the black body curve.
- Values from 126 to 0 shift the white point towards magenta.
- Values from 129 to 255 shift the white point towards green.

Color mixing using RGB is then applied ‘on top of’ this white point.

Virtual color wheel

The Beam virtual color wheel effect provides 23 color presets plus open. It consists of solid colors, split colors, shake between colors with variable speed and random colors with variable speed.

The Backlight virtual color wheel effect provides 95 color presets plus open. It consists of solid colors, color wheel rotation effects with variable speed and direction and random colors with variable speed.

In normal operation, the virtual color wheel effects override the color mixed by the RGB color mixing channels as well as the CTC and Green-Magenta shift channels.

When using the fixture’s FX, the virtual color wheel lets you select a background color while you use RGB color mixing channels to set the foreground color.

Pan and Tilt

The fixture's head can pan through a range of 540° and tilt through 225° with 16-bit control resolution.

PWM frequency fine-tuning

The PWM frequency of the fixture's Beam is set at 19200 Hz by default. This frequency has been chosen to avoid flickering on camera. In some situations, it may be necessary to fine-tune the Beam PWM frequency manually. The fixture offers from -2% to +2% PWM frequency adjustment in all DMX control modes.

Note that any new Beam PWM adjustment value is not stored permanently in the fixture, so you have to keep the PWM Frequency DMX channel at the chosen value in order to keep the frequency at the corresponding custom value.

Pre-programmed FX

The MAC One Beam offers a range of pre-programmed effect macros that we simply call FX. See a full description under 'FX Macros' on page 55. FX give instant access to complex dynamic effects with no need for time-consuming programming at the controller.

Virtual dimmer enhancer

When using virtual dimming on the Backlight pixel RGB channels (channels 36 – 107) in Ludicrous DMX Mode on a lighting console, you may notice color shifts at the bottom end of the dimming range. This is due to the fact that Backlight pixel RGB channels are only 8-bit and therefore do not offer enough resolution to maintain full color balance at that end of the dimming range.

This issue does not exist when you use the (real) 16-bit Backlight dimmer DMX channels 27 and 28.

If you want to use virtual dimmers on your lighting console, you can improve the bottom end of the dimming range by selecting the Virtual Dimmer Square Law FX Macro using DMX channel 21 or 23.

Control panel

You can configure individual fixture settings (such as the fixture's DMX address), read out data, execute service operations and view error messages using the fixture's backlit graphic display and control panel.

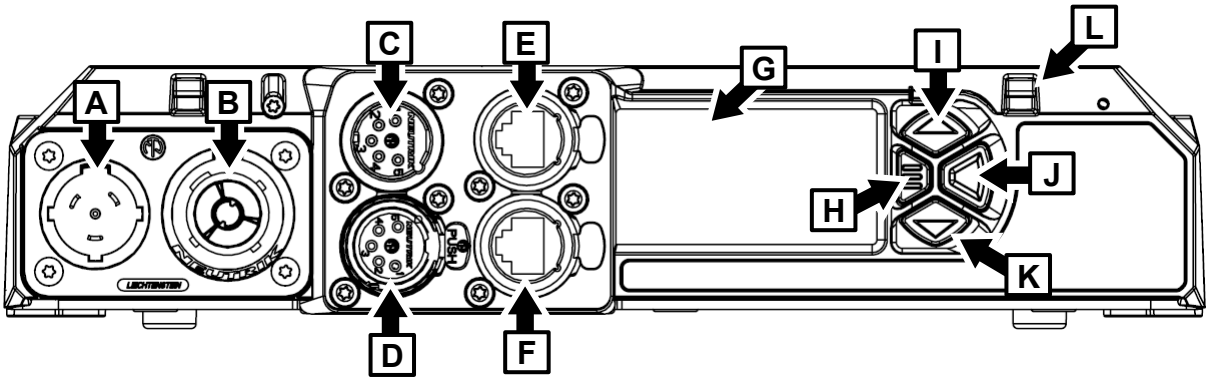

A – Mains power IN

B – Mains power THRU

C – DMX data IN (5-pin XLR)

D – DMX data THRU (5-pin XLR)

E – Ethernet port A

F – Ethernet port B

G – Control panel display

H – **Menu** button

I – **Up** button

J – **Enter** button

K – **Down** button

L – Status LED

Connections and control panel

When the MAC One Beam is powered on, it first boots and resets, then it displays its DMX address, DMX universe, fixture ID number and any status messages (see 'Service and diagnostic messages' on page 40) in the display **G**. The display can be rotated to match standing or hanging fixture orientation in the PERSONALITY → DISPLAY menu or the Shortcuts menu (see 'Shortcuts menu' on page 11).

Using the control panel

- Press the MENU button **H** or ENTER button **J** to access the menus.
- Use the UP and DOWN buttons to scroll up and down menus.
- Press the ENTER button **J** to enter a menu, make a selection or confirm a choice.
- The currently selected item in a menu is indicated by a star ✠ .
- Press the MENU button **H** to step backwards through the menus.

Special keypress functions

- Pressing the UP and DOWN buttons together rotates the control panel display through 180°.
- Pressing the MENU and UP buttons together resets the entire fixture.
- Pressing and holding the MENU button for two seconds opens a Shortcuts menu (see next page).
- Holding the MENU button pressed while applying power puts the fixture into Service Mode. Pan and tilt are disabled in order to avoid head movement causing problems during service operations with the fixture powered on.

  Cycling power and allowing the fixture to start up normally takes it out of Service Mode.

Status LED

The Status LED **L** next to the control buttons indicates fixture status by showing a color:

- GREEN: All parameters normal.
- AMBER: Warning (service interval exceeded, for example).
  - If ERROR MODE is set to NORMAL, the warning message will be shown in the display.
  - If ERROR MODE is set to SILENT, the display must be activated by pressing the ENTER button to display the warning message.
- RED: Error detected.
  - If ERROR MODE is set to NORMAL, the error message will be shown in the display.
  - If ERROR MODE is set to SILENT, display the error message by entering the menus and going to SERVICE → ERROR LIST.

At the same time, the Status LED indicates DMX status by flashing or lighting constantly:

- FLASHING: No DMX signal detected.
- CONSTANT: Valid DMX signal detected.

The status LED remains active even if the display enters sleep mode.

Battery power

The MAC One Beam contains a lithium battery that gives access to the most important functions in the control panel when the fixture is not connected to AC power. The following functions are available on battery power:

- DMX address
- DMX universe
- DMX Mode
- Fixture ID
- Personality settings (pan/tilt, cooling, fan clean mode, dimming curve, DMX reset, all display settings, error mode)
- Default settings
- Information (Power On Hours and Power Cycles counters, Software version)
- Error list

To activate the display when the fixture is not connected to power, press the MENU button H. Press again to enter the menus. The display extinguishes after 10 seconds with no user input and the control panel is de-activated after 1 minute with no user input. Press the MENU button again to re-activate.

Shortcuts menu

Pressing and holding the MENU button for two seconds opens a small Shortcuts menu with the most important menu items:

- RESET ALL carries out a complete reset of the fixture with all its effects.
- ROTATE DISPLAY rotates the control panel display through 180°. This function makes it easier to read the control panel menus when changing from standing to hanging installation.

Settings stored permanently

The following settings are stored permanently in the fixture memory and are not affected by powering the MAC One Beam off and on or by updating the fixture software:

- DMX address and DMX universe
- IP address, subnet mask and MAC address
- User-settable fixture ID number

- DMX mode
- Personality settings (pan/tilt, cooling, dimming curve, DMX reset, display settings, error mode, etc.)
- Resettable and non-resettable counters
- Service settings (adjustment, calibration)

These settings can be returned to factory defaults using the control menus, via RDM or from a P3 controller.

Display sleep

The control panel display remains permanently on by default, but you can set it to enter sleep mode and black out automatically after two, five or ten minutes with no key press.

When the display is in sleep mode, as soon as a button on the control panel is pressed, or if the fixture's self-diagnosis system detects an error, the display lights up again.

Activating service mode

Holding the MENU and ENTER buttons both pressed in while powering the fixture on puts the fixture into service mode, in which pan and tilt are disabled and a SERV warning appears in the display. Service mode removes the risk of unexpected head movement during service adjustments.

To take the fixture out of SERVICE mode, power the fixture off, then reapply power and allow the fixture to start normally.

Control options

You can control the MAC One Beam using DMX and/or Martin P3 protocol. The fixture auto-senses the type of data that it is receiving and will respond correctly with no need for manual protocol selection.

The following options are available:

- DMX control over standard DMX cable connected to the fixture's 5-pin XLR connectors.
- DMX control using Art-Net over Ethernet cable connected to the fixture's etherCON connectors.
- DMX control using streaming ACN over Ethernet cable connected to the fixture's etherCON connectors.
- DMX control over DMX cable and P3 video data over Ethernet cable.
- P3 video data with embedded DMX commands over Ethernet cable. If you connect DMX / Art-Net / sACN to the P3 system controller, the controller can merge the DMX commands into the P3 signal and send them to the fixture over Ethernet.

Fail-safe connection

The MAC One Beam has a fail-safe network connection. If the fixture loses power or if you shut it down, it will continue to relay an Ethernet signal, and the Art-Net / sACN / P3 signal to the other networked fixtures in the daisy chain will not be interrupted.

Data rate

Any Ethernet switch used to relay Art-Net, streaming ACN or P3 data to the MAC One Beam must be capable of running at 10/100 Mbps speed, as the fixture does not support Gigabit Ethernet data rates.

P3 video

The MAC One Beam accepts video data using Martin's proprietary P3 video protocol that has been a well-established standard in the industry for over 15 years. It lets you send a video signal from a media server or other video source to P3-compliant creative LED fixtures and moving heads over Ethernet cable using Martin's reliable P3 data protocol.

The intuitive graphic user interface in Martin P3 controllers lets you visualize and set up a custom installation that can contain a huge number of fixtures in any kind of physical arrangement within a few minutes. Device identification is automatic. You can arrange devices on the monitor using drag-and-drop. Latency from video input to output on fixtures is extremely low, while there is no latency between fixtures as they are fully synchronized via the P3 protocol. If you use P3 you do not need to worry about IP addresses, as P3 does not use IP addresses or IP communication.

The P3 protocol will supply both DMX data and video pixel data to fixtures over a network cable. On the MAC One Beam you can use the video pixel data to control the intensity and/or the color of the fixture's Beam, Backlight pixels or both with real-time control using the P3 Mix DMX channels.

P3 Mix

The *P3 Mix* DMX channels let you choose how the fixture should respond to color control commands from DMX and P3 control sources. You can:

- set color control to DMX control only, with P3 ignored,
- crossfade between DMX and P3 color control,
- set color control to P3 control only, with DMX ignored, or
- control color with P3 and overlay DMX color control over the top of the P3 color.

RDM

The MAC One Beam can use RDM communication over the DMX link. See ‘Using RDM’ on page 27 for details of the options and commands available.

Martin Companion and RDM

The Martin Companion Windows application (downloadable free of charge from the Martin website at www.martin.com) gives access to all the fixture’s RDM parameters. It supports the fixture’s standard and manufacturer-specific PIDs. It gives full control of all fixture settings remotely, eliminating the need to physically climb to the fixture in a rig, for example.

Martin Companion can also update multiple RDM parameters at once, using the built-in Settings Template system.

Fixture setup

You can adjust the fixture's settings using the following methods:

- Fixture's onboard control panel and control menus (see 'Control menus' on page 33)
- Control/Settings DMX channel (see "Adjusting settings via DMX" on page 25)
- RDM using Martin Companion or an RDM-compatible DMX controller (see 'Using RDM' on page 27)
- P3 using a Martin P3 System Controller.

This chapter covers all the settings adjustments available. The method or methods that you can use to adjust a setting are indicated in each case.

DMX address

Available using: onboard control panel, RDM, P3.

The DMX address, also known as the start channel, is the first channel used to receive instructions from a DMX controller. If you have a group of fixtures and you set the first fixture's DMX address to 1, the fixture will use DMX channel 1 and the channels immediately above it (the number of channels used will depend on the fixture's DMX mode). The channels above these are available for the next fixture.

For independent control, each fixture must be assigned its own control channels. You can give the same DMX address to two fixtures of the same type if you want them to behave identically. Giving the same DMX address to multiple fixtures can be useful for grouped control and troubleshooting.

DMX mode

Available using: onboard control panel, RDM, P3.

Three DMX modes are available: Compact, Basic and Ludicrous modes. See the 'DMX protocols' section on page 43 for details of the DMX control options available and the number of DMX channels used.

Because the fixture's DMX mode affects the number of DMX channels used, it will also affect the assignment of DMX addresses to fixtures. We therefore recommend that you set the DMX mode of all the fixtures in the installation before you set their DMX addresses.

DMX universe

Available using: onboard control panel, RDM, P3.

The fixture is set to communicate via DMX universe 1 by default, but if you have created multiple DMX universes in an installation, you can set the fixture to use any DMX universe from 1 to 63999.

Network settings

Available using the onboard control panel, RDM or P3.

The following Ethernet management options are available. You can:

- View and set the fixture's IP address.
- View and set the fixture's subnet mask.
- View the fixture's MAC address.

Fixture ID

Available using: onboard control panel, RDM, P3.

The Fixture ID is a number in the range 1-65535 which can be set freely by the user. It can help you easily identify a fixture in an installation if you set Fixture IDs to match how fixtures are numbered on the lighting console. The Fixture ID is also used by Martin P3 System Controllers to link fixtures on the P3 workspace with actual fixtures in the rig.

Dimming zones

Available using: onboard control panel, DMX.

Warning! Dimming Zones in the MAC One Beam are areas where the fixture's output intensity is automatically dimmed. They are an essential safety feature that you must understand and configure, otherwise you can cause eye injury in people who are closer than 5 m (16.5 ft.) to the front of the fixture. **See the Physical Installation chapter of the Safety and Installation Manual included at the end of this User Manual** for a full explanation of Dimming Zones and for guidance in setting up Dimming Zones using the fixture's onboard control panel.

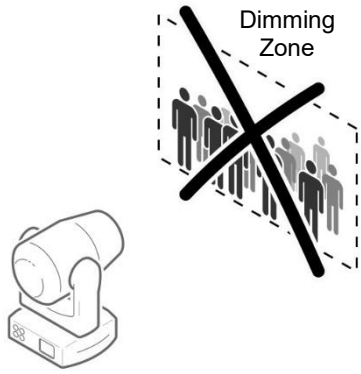

Do not use the fixture until you are sure that you understand how to plan and use Dimming Zones and you are sure that Dimming Zones have been configured for the fixture location. If you are in any doubt about this, contact your Martin distributor for advice and guidance.

Before using the fixture with Dimming Zones enabled in any location where people can be closer than 5 m (16.5 ft.) to the fixture, you must check that Standalone Mode is set to BLACKOUT using the fixture's control panel, Control/Settings DMX channel, RDM or P3 in order to prevent hazardous light output and possible eye injury if the control signal is lost.

Before using the fixture and every time the fixture has been moved or re-oriented, even by a small amount, you must configure the fixture with Dimming Zones that make it impossible for the fixture to project full-intensity light into any area where people may be closer than 5 m (16.5 ft.) to the front of the fixture.

Setting up Dimming Zones via DMX

The Safety and Installation Manual included at the end of this User Manual explains how to set up Dimming Zones using the fixture's *onboard control panel*. The section below explains how to manage Dimming Zones *via DMX*.

Dimming Zones are managed on DMX channel 18 in all the fixture's DMX modes. Note that some of the commands on this DMX channel must be held for 1 or 5 seconds to implement them.

Managing all Dimming Zones together via DMX

You can enable or disable the fixture's Dimming Zone functionality, and you can erase all Dimming Zones at the same time.

If you disable Dimming Zone functionality, the fixture switches to its default reduced-output mode in which it does not shine full-intensity light output in any direction. This is a precaution to avoid potential eyesight hazards.

Likewise, if you erase all Dimming Zones, the fixture switches to its default reduced-output mode and will not shine full-intensity light output in any direction until you have configured the fixture with at least one Dimming Zone.

Configuring individual Dimming Zones via DMX

You can configure up to eight Dimming Zones, and each Dimming Zone must have four corners. The following commands are available for each of the fixture's Dimming Zones individually:

- **Program Dimming Zone X Corner Y** (where **X** is Dimming Zone 1 to 8 and **Y** is Corner A to D) – Open the dimmer and use pan and tilt to move the fixture's beam to the position where you want to set a corner, then send a **Program Corner** command for 1 second. The fixture will store that position in memory as a Dimming Zone corner and flash its beam blue to confirm that the corner has been programmed. To set up a Dimming Zone correctly you must program four corners A to D.

- **Go to Dimming Zone X Corner Y** – Sending a **Go to Corner** command moves the fixture beam to a Dimming Zone corner so that you can check the position of the corner.

  If you want, you can now adjust the position of that corner. To do this, offset the beam position using pan and tilt – pan and tilt DMX channels will now behave as relative offsets from the previously stored corner position – then send a **Program Dimming Zone X Corner Y** command for that corner. The new corner position is now stored in memory and the fixture will flash its beam blue to confirm that the corner has been programmed.
- **Enable or Disable Dimming Zone X** – You can enable or disable each Dimming Zone individually by sending a command for 1 second.
  - The fixture will flash its beam green if the Dimming Zone that you have enabled is valid (four corners programmed and valid shape created) and therefore activated.
  - The fixture will flash its beam red if you try to enable a Dimming Zone that is incomplete or has an invalid shape, and it will not activate that Dimming Zone.
  - The fixture will flash its beam yellow to confirm that you have disabled a Dimming Zone.
- **Erase Dimming Zone X** – You can erase an individual Dimming Zone without affecting the other Dimming Zones. You must send an **Erase** command for 5 seconds to implement it.
- **Show Dimming Zone X corners** – You can check the correct positions of the corners of each Dimming Zone by sending a **Show Dimming Zone corners** command. The fixture will move the beam to each corner of the Dimming Zone, staying for one second in each corner and then taking one second to move to the next corner.

Repeat the process of programming and checking corners for all of the Dimming Zones that you plan to use.

When you have finished programming and checking corners for all the required Dimming Zones, return the Dimming Zones DMX channel to **No function** (value 0) to allow normal operation.

Useful commands during operation

Any time you are unsure of the correct corner positions for a Dimming Zone, use a **Show Dimming Zone X corners** command to check them.

If you need to adjust the position of a Dimming Zone corner, use a **Go to Dimming Zone X Corner Y** command, adjust the corner position using pan and tilt and then send a **Program Dimming Zone X Corner Y** command for that corner for 1 second.

If you disable all the Dimming Zones, the fixture switches to its default reduced-output mode and will not shine full-intensity light output in any direction until you have re-enabled at least one Dimming Zone. When the fixture is in this state, it shows a DMZW (No Dimming Zone Set) warning in the control panel display.

Moving fixtures or removing them from an installation

Before moving a MAC One Beam fixture or tearing down a MAC One Beam installation, use an **Erase all Dimming Zones** command to clear all Dimming Zones from memory and return the fixture to its default reduced-output mode. If you do not do this, there is a risk that the fixture will shine a full-intensity beam at people's eyes from a distance of less than 5 m (16.5 ft.) and cause eye injury the next time power is applied.

Pan/tilt inversion

Available using: onboard control panel, RDM, P3.

Reversing the direction of pan and tilt can be useful if you want to create symmetrical effects with multiple fixtures, or if you want to coordinate the movement of fixtures that are standing on the floor with fixtures that are being flown upside down in a rig.

Pan and tilt limits

Available using: onboard control panel, Control/Settings DMX channel, RDM, P3.

Defining minimum and maximum limits in degrees for pan and/or tilt ranges lets you install fixtures close to obstacles (such as other fixtures or trusses) with no risk of collision, ensure that the beam will only hit a certain area of a stage or set, or avoid the fixture shining into the eyes of the audience, for example. If you set limits, the fixture's pan and tilt movement will remain in a 'safe zone' within those limits.

To set a limit, you must first use the pan or tilt DMX channel to move the head to the position where you want to set the limit and then apply a MIN or MAX command.

Note that when you power the fixture off, the head may move under its own weight to a position that is outside its pan and tilt limits.

Pan/tilt speed

Available using: onboard control panel, Control/Settings DMX channel, RDM, P3.

Three pan and tilt speed settings are available:

- STANDARD is a compromise setting that gives reasonable smoothness, speed and responsiveness, even if the DMX controller has unstable DMX output.
- FAST (default setting) optimizes pan and tilt movement for speed and responsiveness. Slow pan and tilt movement may be less smooth if the DMX controller has unstable DMX output.
- SMOOTH optimizes pan and tilt movement for smoothness. Slow pan and tilt movement will be smoother than at the FAST setting, but maximum pan and tilt movement speed will be reduced.

Effects speed

Available using: onboard control panel, RDM, P3.

Three effects speed settings are available:

- FOLLOW P/T (default setting) – effects speed follows the speed that has been set for pan/tilt.
- STANDARD – gives reasonable smoothness, speed and responsiveness, even if the DMX controller has unstable DMX output.
- FAST – optimized for speed and responsiveness.
- SLOW – optimized for smooth movement – useful for slow, gradual effects changes.

Dimming curves

Available using: onboard control panel, Control/Settings DMX channel, RDM, P3.

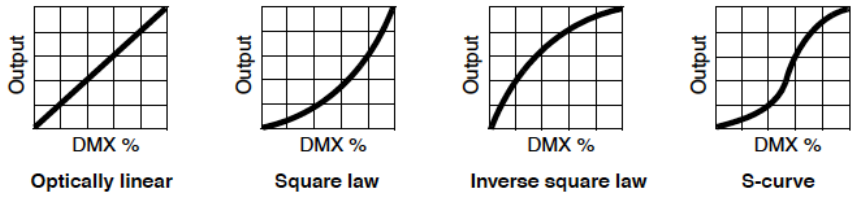

Four dimming curves are available:

- LINEAR – The increase in light intensity appears to be linear as DMX value is increased.
- SQUARE LAW (default setting) – light intensity control is finer at low levels and coarser at high levels.
- INVERSE SQUARE LAW – light intensity control is coarser at low levels and finer at high levels.
- S-CURVE – light intensity control is finer at low levels and high levels and coarser at medium levels.

Tungsten emulation

Available using: onboard control panel, Control/Settings DMX channel, RDM, P3.

In tungsten emulation mode, the fixture's white light output is made warmer, the warm shift is increased at lower dimming levels, and an 'afterglow' effect is added after dimming. This mode gives the 'look and feel' of a fixture that uses an incandescent light bulb as its source.

Color mode

Available using: onboard control panel, Control/Settings DMX channel, RDM, P3.

Two color modes give options for RGB color mixing that affect color saturation and evenness between fixtures:

- EXTENDED GAMUT (default setting) optimizes light output for color saturation and gets the deepest possible color saturation. The white color point is calibrated and even across different fixtures, but as the fixture approaches full color saturation there can be very small differences in color rendition between different fixtures.
- CALIBRATED COLOR optimizes light output for even color rendition between fixtures. All fixtures display identical color from white point to full color saturation. Maximum color saturation levels are limited slightly in order to ensure this.

  Calibrated Color Mode may be useful if you notice slight differences in color performance across multiple fixtures. Note that the colors obtained through RGB color mixing in Calibrated Color Mode may differ significantly from the colors obtained in Extended Gamut Color Mode. Multiple fixtures in the same installation should normally all be set to either Extended Gamut or Calibrated Color Mode in order to ensure the most consistent color behavior.

Video tracking

Available using: onboard control panel, Control/Settings DMX channel, RDM, P3.

VIDEO TRACKING optimizes performance if the fixture is used with a video source. In normal use, the fixture processes the signal it receives, tracking (or smoothing out) changes in values in order to ensure smooth fading between colors and/or intensities. This signal processing takes fractions of a second and is normally invisible, but if the fixture is used to display video the processing can interfere with video response times. If you enable video tracking, the fixture does not 'smooth out' input but instead snaps instantly when a value changes.

If you enable video tracking, some lack of smoothness may be visible when dimming slowly via DMX at low intensity levels.

For best results, we recommend that you enable video tracking when using video as a source and disable it (the default setting) during DMX control.

DMX reset

Available using: onboard control panel, RDM, P3.

DMX RESET lets you decide whether it should be possible to send a reset command to the fixture via DMX. Disabling DMX Reset makes it impossible to reset a fixture accidentally (an accidental reset could be a major disruption during a show).

Cooling mode

Available using: onboard control panel, Control/Settings DMX channel, RDM, P3.

There are five cooling fan options:

- CONSTANT FAN FULL optimizes cooling fan operation for the lowest possible temperature by setting cooling fans to run constantly at full speed. Light output intensity is kept at its maximum, as the fixture operates at the coolest temperature possible.

- CONSTANT FAN MEDIUM sets cooling fans to run constantly at medium speed. Light output intensity is reduced if necessary to prevent the fixture from exceeding its maximum operating temperature during medium speed fan operation.
- CONSTANT FAN LOW sets cooling fans to run constantly at low speed. Light output intensity is reduced if necessary to prevent the fixture from exceeding its maximum operating temperature during low speed fan operation.
- CONSTANT FAN ULOW (ULTRALOW) optimizes cooling fan operation for the lowest possible noise by setting cooling fans to run constantly at ultra-low speed. Light output intensity is reduced if necessary to prevent the fixture from exceeding its maximum operating temperature during ultra-low speed fan operation.
- REGULATED FANS (default setting) adjusts cooling fan operation to balance the fixture's noise and light output characteristics. Cooling fans are set to the lowest speed possible and then increased as fixture operating temperature rises. If the fixture reaches maximum operating temperature and full-speed fan operation is not enough to control fixture temperature, light output intensity is limited to keep the fixture within its operating temperature range.

Display options

Available using: onboard control panel, RDM, P3.

The following options for the fixture's onboard control panel display are available:

- DISPLAY SLEEP sets the fixture display to black out a certain number of minutes after the last key press on the fixture's control panel. If ERROR MODE (see below) is set to NORMAL, the display will light up again if the fixtures detects and error.
- DISPLAY INTENSITY lets you adjust the brightness of the display backlighting by setting the intensity to a level from 0% to 100%.
- DISPLAY ROTATION lets you rotate the contents of the control panel display through 180° so that it can be read easily if the fixture is installed in a hanging position.
- DISPLAY CONTRAST lets you adjust the contrast of the LCD display on the fixture's integrated control panel.

Disabling the display

It is possible to black out the fixture's control panel display by sending a DMX command on the Control/Settings channel. Blacking out fixtures' onboard displays reduces visual distractions in the lighting rig for audiences.

Error mode

Available using: onboard control panel, RDM, P3.

You can enable or disable the display of error messages and warnings:

- If set to NORMAL, the display is activated and lights up if the fixture needs to report an error.
- If set to SILENT, the fixture does not light the display with error warnings, but warnings and error messages can still be read when the display is activated manually.

In both NORMAL and SILENT modes, the status LED lights amber to indicate a warning and red to indicate an error.

Hibernation mode

Available using: onboard control panel, Control/Settings DMX channel, RDM, P3.

HIBERNATION MODE sets light output intensity to zero and disables effect deployment and pan/tilt movement. This mode can be used to protect the fixture from the intake of airborne material such as dust and confetti. It also provides an option to conserve electrical power when the fixture is not used for an extended period.

When you bring the fixture out of hibernation mode, it performs a full reset.

Stand-alone operation

Available using: onboard control panel, Control/Settings DMX channel, RDM, P3.

In stand-alone operation, the fixture can show one or more scenes (a 'scene' is a programmed 'look' or combination of effects) with no controller connected.

Warning! Make sure that mains power to the fixture can be shut down from a remote location by the operator should it be necessary to shut down the light output during stand-alone operation.

Single-scene stand-alone

Using the fixture's control panel or the DMX Control/Settings channel, you can set up single-scene stand-alone operation as follows:

1. Using either DMX or manual control in the fixture's control panel, set the fixture to display the scene that you want to store as the stand-alone scene.
2. Send a **Record Stand-alone Scene** command using the control panel or the Control/Settings DMX channel to store that scene into the fixture's memory.
3. Send an **Enable Stand-alone** command using the fixture's control panel or the Control/Settings DMX channel. The fixture will now show that scene at all times when it is powered on and not receiving a control signal.
4. If the fixture receives a DMX control signal during stand-alone scene playback, it will immediately stop showing its saved scene. If fixture power is cycled off and on again or if the fixture is reset, it will again show its saved scene.
5. If you disable stand-alone operation, the fixture simply keeps its last look if it stops receiving a control signal. However, disabling stand-alone operation does not delete the saved scene from memory: the scene will still be available if you enable stand-alone operation again.

Multi-scene stand-alone

Using RDM via the Martin Companion Desktop application you can set up a multi-scene stand-alone show. You can program up 20 scenes with individual hold (scene duration) and fade (scene change) times. You can synchronize the stand-alone show in multiple fixtures. Martin Companion features an intuitive interface, so we only give brief details of stand-alone programming below.

To program a stand-alone show using Martin Companion:

1. Connect a PC running the Martin Companion application to the data link. If fixtures are connected via a traditional DMX512 link, you can connect the PC to the link using the Martin Companion USB-to-DMX hardware interface that is available from Martin suppliers.
2. Apply power to the fixtures on the link that you want to program.
3. Navigate to the **Stand-Alone** screen in Martin Companion and wait for all fixtures to be discovered automatically. Then select which fixtures you want to program for stand-alone operation using the checkboxes in front of them.

   You can now:

   - click on **Create** to create a new stand-alone show for those fixtures, or
   - or click on **Edit** to modify the stand-alone show already present inside the selected fixtures, or
   - click on **Clear Fixture(s)** to delete any previous stand-alone show from the selected fixtures.

   You can also load a previously created show from a file if you click on **Load Show**.
4. The rest of the stand-alone programming process is fairly intuitive in Martin Companion's interface.

Note that not all fixtures in a stand-alone show have to show the same scenes – it is possible to create a different scene for each fixture. Martin Companion automatically selects one fixture to act as the host in synchronized stand-alone operation (see below).

If you enable stand-alone operation, fixtures will run their stand-alone show at all times when they are powered on and not receiving a control signal.

If fixtures receive a control signal during stand-alone scene playback, they will immediately stop showing their stand-alone show. If fixture power is cycled off and on again or if the fixture is reset, it will again show its saved stand-alone show.

If you disable stand-alone operation, fixtures simply keep showing their last look if they stop receiving a control signal. However, disabling stand-alone operation does not delete the saved show from memory: the show will still be available if you enable stand-alone operation again.

Synchronized stand-alone operation

All fixtures programmed together for stand-alone operation will synchronize the playback of their stand-alone scenes. Fixtures need to be connected to each other on a data link for synchronization to work, but they do not need to be connected to a DMX / P3 / Art-Net / sACN controller. Fixtures that are synchronized will switch to the same scene number with the same duration and fade time, but different fixtures can have a different lighting effect programmed into them for any one scene number.

Note that Martin Companion automatically assigns one fixture as the stand-alone host, and all the others as clients. The host fixture only tells the client fixtures to “go to scene X with fade time Y”. The lighting effect that each fixture uses in a specific scene is stored inside each fixture individually. Again, not all fixtures have to show the same lighting effect in each scene. Only the duration and fade times are synchronized.

Offline Mode

Available using: onboard control panel, Control/Settings DMX channel, RDM, P3.

OFFLINE MODE determines fixture behavior when there is no control input, including if the control signal is lost during operation. The available options are:

- BLACKOUT – fixture dims to zero when control input is lost. This is the default setting.

  Warning! To make sure that full-power light output is not aimed at people by accident if control input is lost, Offline Mode must be set to BLACKOUT when the fixture is installed in a location where people can be closer than 5 m (16.5 ft.) to the fixture.
- KEEP LAST LOOK – fixture freezes at last state when control input is lost.
- STAND-ALONE – fixture starts Stand-Alone Show when control input is lost.

Backlight in Compact Mode

Available using: onboard control panel, Control/Settings DMX channel, RDM, P3.

BACKLIGHT IN COMPACT MODE lets you activate or deactivate the Backlight pixels when you are controlling the fixture in Compact DMX mode. If you enable the Backlight in Compact Mode, the Backlight LEDs follow the color and intensity of the Beam.

Restoring factory defaults

Available using: onboard control panel, RDM, P3.

You can return the fixture to its factory default settings. Any custom settings that have been configured will be erased.

Important! Restoring the factory default settings erases all programmed Dimming Zones and returns the fixture to its default reduced-output mode.

Restoring the factory default settings does not affect the fixture’s calibration settings.

DMX Live

Available using: onboard control panel only.

You can view the DMX values currently being received on each of the fixture’s DMX channels using the onboard control panel only. Viewing DMX values can be useful for troubleshooting purposes.

To view the DMX values being received:

1. Select DMX LIVE and use the UP and DOWN buttons to scroll through the value being received on each channel.
2. To return to the previous level of the menu structure, press MENU.

Fixture self-testing

Available using: onboard control panel, RDM, P3.

You can run automatic self-test sequences as follows:

- Run a sequence that tests all of the fixture's effects including pan and tilt.
- Test light functionality only.
- Test pan and tilt functionality only.

Manual control

Available using: onboard control panel only.

The control panel's MANUAL CONTROL menu lets you can manually reset the fixture or control individual effects.

Resetting the fixture

You can reset the entire fixture to return it to its state when you powered it on. To carry out a full reset, select MANUAL CONTROL → RESET and press ENTER. The entire fixture will reset as if you had cycled power. The full reset process will take several seconds.

Manual control of effects

You can control all the fixture's effects including pan and tilt manually without the need for a DMX signal.

To manually control the fixture:

1. Select MANUAL CONTROL and then use the UP and DOWN buttons to scroll to the effect that you want to control. Press ENTER.
2. Use the UP and DOWN buttons to scroll to the DMX value from 000 to 255 that you want to send to that effect. Press ENTER to confirm and send that value.
3. To return to the list of effects, press MENU.
4. If you want to manually control other effects together with the first effect, repeat steps 1. and 2. and 3. above for the other effects.

   The fixture will continue to show the effects that you have set manually until you set new manual control values for the effects.

Exiting the MANUAL CONTROL menu by pressing the MENU button stops all the effects immediately.

For convenience, the MANUAL CONTROL menu also includes a RECORD CURRENT LOOK command that lets you save your current manual control settings as the fixture's stand-alone scene.

The effects are unaffected by a power OFF/ON cycle: if you power the fixture off and on again, it will resume showing the effects.

When in manual control mode, pressing any button on the control panel lights up the control panel display and shows the message MANUAL CONTROL MODE.

Service utilities

Status messages

Available using: onboard control panel, RDM.

The MAC One Beam features a self-diagnostic system that detects any issues concerning correct operation or safety (temperature that exceeds safe level, for example) and communicates the issues as status messages or warnings. These messages can be useful in connection with service and maintenance.

Error messages appear in the fixture's control panel display (the ERROR MODE setting defines when they are displayed), and you can also call them up via RDM.

It is possible to:

- Call up a list of up to 20 status messages that the fixture has stored in memory.
- View information on the messages.
- Clear the stored list of status messages.

Fan clean function

Available using: onboard control panel, RDM, P3.

The fan clean utility activates a sequence that runs fans at full speed in order to remove dust and dirt. This function will not clean fan blades completely, but it can remove the worst of any accumulated dust.

Disabling pan and tilt feedback

Available using: onboard control panel only.

The fixture features pan/tilt position feedback sensors to ensure accurate positioning of the head. Pan/tilt feedback is enabled by default. If you experience unexpected positioning behavior, it can be useful to disable the feedback system.

Calibration

Available using: onboard control panel, Control/Settings DMX channel.

Martin fixtures are adjusted and calibrated at the factory, and further calibration should only be necessary if fixtures have been subjected to abnormal shocks during transport or if normal wear and tear has affected alignment after an extended period of use. However, you can use calibration to fine-tune fixtures for a particular location or application.

Calibrating effects using the onboard control panel

The SERVICE → CALIBRATION menu lets you define values in the fixture software to adjust the positions of pan, tilt and effects relative to the DMX values the fixture receives. Creating calibration offsets like this allows you to fine-tune fixtures and achieve uniform behavior in multiple fixtures.

We recommend the following procedure to adjust the fixture's calibration settings:

1. Aim a reference fixture and the fixtures that you want to calibrate at a flat surface. You can calibrate fixtures one at a time or line up multiple fixtures in a row. Apply power and set pan, tilt and effects to the same DMX values.
2. In each fixture, scroll through the effects in the SERVICE → CALIBRATION menu and adjust the position of any effects that need calibration while comparing the light output with the reference fixture. The calibration range available varies depending on the effect.
3. After selecting a value, press ENTER to confirm. The fixture will remember any new calibration values that you have set, and the new positions will not be affected by powering the fixture off and on. To return to the list of effects, press MENU.

Loading factory default calibration values

The fixture keeps the original factory-set calibration values in memory. You can erase any custom calibration values that you have defined using the procedure outlined above and reload the default factory calibration values at any time by applying a SERVICE → CALIBRATION → LOAD DEFAULTS → LOAD command.

Overwriting factory default calibration values

It is possible to overwrite the factory-set calibration values and replace them with the currently defined calibration values, but take care when doing this. Please contact Martin Service if you have any questions about making this change.

Important! Overwriting factory default calibration values with custom values is permanent. If you have set a custom value and applied a CALIBRATION → LOAD DEFAULTS → SAVE command, you will not be able to recover the original factory default value.

To overwrite the factory default calibration values:

1. Set new calibration values for the effects that you want to recalibrate by adjusting them as described above.
2. Apply a SERVICE → CALIBRATION → LOAD DEFAULTS → SAVE command.

Deleting all factory default calibration values

It is possible to delete all factory-set calibration values and return all the fixture's calibration values to zero using the DEFAULT SETTINGS → LOAD control menu, RDM or P3.

Important! Setting all the default calibration values to zero is permanent. You will not be able to recover any of the original factory default calibration values once you have set them all to zero.

Calibrating effects via DMX

You can adjust the home positions of pan, tilt and all the fixture's effects remotely via DMX by setting custom calibration offsets on the Control/Settings DMX channel. The DMX option has the advantage of letting you calibrate multiple fixtures from the DMX controller when the fixtures are in position in the lighting rig.

Setting calibration offsets

To set a custom offset in the position of an effect:

1. Set the effect to a specific value via DMX (for example, set all the fixtures in a group to DMX value 32768 on the pan channel).
2. Select 'Enable calibration' on the first fixture's Control/Settings channel and hold for 5 seconds to activate.
3. The fixture now registers the current positions of all effects and holds them there. To select an effect to adjust, you must first release it from its hold position by changing the value on its DMX channel by +/- 10%. The effect first changes by +/- 10% in line with the changed DMX value that you have sent, and then immediately returns to its hold position. The effect's DMX channel now represents the full calibration range. The range can vary but is typically +/- 5-10%. In this case you can adjust the effect's position using that effect's DMX channel (8- or 16-bit) as follows:
   - DMX value 0 = -5%
   - DMX value 127/32767 = 0%
   - DMX value 255/65535 = +5%.
4. Adjust the effect until it is in the required position (for example, adjust the pan position on each fixture in the group until the position on all fixtures is identical – this is the position that you will obtain when you send DMX value 32768).
5. Send a 'Store XXX calibration' command on the Control/Settings channel for each effect that you adjust and hold that command for 5 seconds to activate. The new calibration offset is now stored in memory.

6. When you have finished adjusting calibration offsets, send value 0 on the Control/Settings channel and hold for 5 seconds to exit the DMX calibration procedure and return to normal DMX control. You can now calibrate the next fixture.

Calibration offsets that are stored in memory are not affected by powering the fixture off and on or by updating the fixture software.

Restoring default calibration offsets

If you want to delete all custom calibration offsets and return the offsets to their default values:

1. On the Control/Settings DMX channel, send a 'Reset ALL calibration values to their factory defaults' command and hold for 5 seconds.
2. The fixture will return all effects to their default calibration values.

Note that, If you have overwritten the factory default values by applying a SERVICE → CALIBRATION → LOAD DEFAULTS → SAVE command in the fixture's onboard control panel, the fixture will return to the calibration values that were saved as the default values at that time. The SAVE command in the fixture's control panel permanently replaces the factory default calibration settings with any custom calibration settings that are applied at that time.

Managing internal modules

The fixture identifies the modules that are installed inside it, mainly for calibration purposes. The EXPECTED MODULES menu lets you manage module identification.

Important! The EXPECTED MODULES menu is for use by, or with guidance from, Martin Service only.

Fixture information

The MAC One Beam can provide fixture and operating information as outlined below.

Operating time counters

Non-resettable counters

You can view the following non-resettable counters using the onboard control panel, RDM or P3:

- Power on time – Number of hours fixture has been powered on since manufacture.
- Number of power cycles –Number of times fixture has been powered on since manufacture.
- Beam operating time – Number of hours Beam has been powered on since manufacture.
- Backlight operating time – Number of hours Backlight has been powered on since manufacture.

Resettable counters

For each of the non-resettable counters listed above, there is also a resettable counter that you can use to monitor fixture use over the period of time since the counter was last reset.

Firmware version

You can view the currently installed firmware version using the onboard control panel, RDM or P3.

RDM unique ID number

You can view the fixture's unique non-resettable 12-digit RDM ID number using the onboard control panel, RDM or P3.

Fixture temperature readouts

You can view temperature readouts from the fixture's circuit boards using the onboard control panel, RDM or P3. For each temperature readout, you can view the current temperature as well as minimum and maximum recorded temperatures since the last time power was cycled off and on.

Fixture type, manufacturer information

You can view basic information about the fixture's type, model and manufacturer using RDM.

Adjusting settings via DMX

The Control/Settings DMX channel available in all the fixture's DMX modes lets you adjust fixture settings remotely via DMX. To implement a command on the Control/Settings channel, you must hold the required DMX value for a certain number of seconds. The amount of time required is given in the DMX protocol tables later in this manual.

Using RDM

The chapter covers the use of Martin Companion to set up and manage the MAC One Beam via RDM. While we recommend the use of Martin Companion, most of the commonly available RDM controllers also support the MAC One Beam. Check with the controller manufacturer if you cannot find the Martin MAC One Beam in the list of supported fixtures. The exact procedures and command names used by different RDM controllers vary.

Setting up single or multiple fixtures

You can set behavior in one fixture by sending a unicast RDM command to that one fixture only, or you can set behavior in all the fixtures on the data link by sending a broadcast RDM command to all the fixtures.

Martin Companion® and RDM

To set up MAC One Beam fixtures via RDM, we recommend using the **Martin Companion Cable** PC-to-DMX interface that is available as an accessory from Martin suppliers. This tool plugs into the USB port of a Windows PC and connects to Martin fixtures over the DMX data link via a 5-pin XLR connector. The Martin Companion Cable is designed to work together with the **Martin Companion software suite** for Windows PCs. This software can be downloaded free of charge from the Martin website at www.martin.com. Martin Companion will always offer the latest MAC One Beam features and firmware when your PC is connected to the Internet.

Instructions for connecting the Martin Companion Cable are supplied with the tool and can also be downloaded from the Martin website.

Martin Companion offers the following features:

- Simple PC-based user interface
- Update of fixture firmware
- RDM configuration and DMX addressing
- Stand-alone show programming with automatic start when fixtures are powered on.

RDM functions

A full list of the RDM functions that MAC One Beam fixtures support is given at the end of this chapter. We refer to these functions using the more specific term 'PIDs' ('Parameter IDs').

Fixture discovery

Before you can communicate with fixtures using RDM, you must send a scan command (fixture discovery command) to all the devices on the data link so that the RDM controller can identify them. It does this by retrieving each device's factory-set unique identifier (UID). This process can take some time, depending on the number of devices on the link.

To identify the fixtures on the link:

1. Check that the fixtures are correctly connected to the RDM controller on the data link and that power is applied to all fixtures.
2. Send a discovery command via RDM (Martin Companion does this automatically as soon as the cable is connected).
3. Give the controller time to identify the devices on the link and prepare for communication with the devices.

Supported parameters

MAC One Beam fixtures can communicate their supported control parameters to the RDM controller and give brief information on each parameter.

Example: setting a DMX address

You can set the DMX address of a fixture (or fixtures) on the data link via RDM. An example procedure from Martin Companion v. 2.0 might look like this, but the procedure will vary depending on which RDM controller you use:

1. Check that fixtures are powered on a connected to data over the DMX/RDM link.
2. Connect the Martin Companion Cable to your computer and to the DMX/RDM link.
3. Start the Martin Companion application.
4. Navigate to the **RDM** view in Martin Companion.
5. Wait until RDM Discovery has completed. This happens automatically, you just need to wait for the Discovery icon top right to stop blinking.
6. Navigate to the **Patch** tab and check the **Mode** and **Address** columns.
7. Update the values in those columns to change the DMX mode and/or DMX start address for the selected fixtures.

RDM utilities

Besides the options listed earlier in this manual, two RDM PIDs are particularly useful when the fixture is in the lighting rig where access is difficult:

- The **Identify Device** PID makes the fixture flash and move so that you can identify the fixture in the rig.
- If you apply a **Display Errors** PID, the fixture's control panel display wakes up and displays any error messages, even if the display is blacked out.

RDM Parameter IDs

The fixture supports the standard RDM PIDs (Parameter IDs) required by ESTA plus manufacturer-specific PIDs that give a range of configuration options.

See the following tables.

Standard RDM Parameter IDs

PID	Name	Description	GET	SET
Device discovery				
0x0001	DISC_UNIQUE_BRANCH	Fixture discovery	N/A	N/A
0x0002	DISC_MUTE	Fixture discovery	N/A	N/A
0x0003	DISC_UN_MUTE	Fixture discovery	N/A	N/A

PID	Name	Description	GET	SET
Status messages				
0x0020	QUEUED_MESSAGE	Get queued messages	✓	
0x0030	STATUS_MESSAGES	Get status/error information	✓	
0x0031	STATUS_ID_DESCRIPTION	Status/error description	✓	
0x0032	CLEAR_STATUS_ID	Clear status/error queue		✓
RDM information				
0x0050	SUPPORTED_PARAMETERS	Parameter discovery	✓	
0x0051	PARAMETER_DESCRIPTION	Parameter discovery	✓	
Device information				
0x0060	DEVICE_INFO	Get basic fixture info	✓	
0x0080	DEVICE_MODEL_DESCRIPTION	Product name	✓	
0x0081	MANUFACTURER_LABEL	Manufacturer name	✓	
0x0082	DEVICE_LABEL	Info label (user-settable)	✓	✓
0x00C0	SOFTWARE_VERSION_LABEL	Firmware version	✓	
Usage information				
0x0400	DEVICE_HOURS	Fixture hours (resettable)	✓	
0x0401	LAMP_HOURS	LED hours (resettable)	✓	
0x0405	DEVICE_POWER_CYCLES	Fixture power cycles (resettable)	✓	
0x870A	DEVICE_HOURS_TOTAL	Fixture hours (non-resettable)	✓	
0x870B	LAMP_HOURS_TOTAL	LED hours (non-resettable)	✓	
0x870C	POWER_CYCLES_TOTAL	Fixture power cycles (non-resettable)	✓	
Sensors				
0x0200	SENSOR_DEFINITION	Sensor description	✓	
0x0201	SENSOR_VALUE	Sensor value	✓	
DMX setup				
0x00E0	DMX_PERSONALITY	DMX mode	✓	✓
0x00E1	DMX_PERSONALITY_DESCRIPTION	DMX mode details	✓	
0x00F0	DMX_START_ADDRESS	DMX start address	✓	✓
0x0121	SLOT_DESCRIPTION	DMX channel details	✓	
Ethernet setup				
0x0700	LIST_INTERFACES	List Ethernet ports	✓	
0x0701	INTERFACE_LABEL	Name of Ethernet port	✓	
0x0702	INTERFACE_HARDWARE_ ADDRESS_TYPE1	MAC address of Ethernet Port	✓	
0x0703	IPV4_DHCP_MODE	Read DHCP mode	✓	

PID	Name	Description	GET	SET
0x0705	IPV4_CURRENT_ADDRESS	Get current IP address	✓	
0x0706	IPV4_STATIC_ADDRESS	Set static IP address	✓	✓
0x0709	INTERFACE_APPLY_CONFIGURATION	Apply Ethernet configuration		✓
0x0903	ENDPOINT_TO_UNIVERSE	Set DMX universe	✓	✓
Display settings				
0x0500	DISPLAY_INVERT	Flip control panel display	✓	✓
0x0501	DISPLAY_LEVEL	Adjust control panel display intensity	✓	✓
Pan/Tilt				
0x0600	PAN_INVERT	Invert pan	✓	✓
0x0601	TILT_INVERT	Invert tilt	✓	✓
Fixture management				
0x0090	FACTORY_DEFAULTS	Reset to factory defaults	✓	✓
0x1000	IDENTIFY_DEVICE	Identify fixture in rig	✓	✓
0x1001	RESET_DEVICE	Reset fixture		✓
0x1020	PERFORM_SELFTEST	Run self-test	✓	✓
0x1021	SELF_TEST_DESCRIPTION	Self-test description	✓	

Manufacturer-specific RDM Parameter IDs

PID	Name	Description	GET	SET
Fixture information				
0x8003	FIXTURE ID	Fixture ID number (user-settable)	✓	✓
0x8700	SERIAL_NUMBER	Fixture serial number	✓	
DMX Protocol				
0x8001	DMX_RESET	Enable fixture resettable via DMX	✓	✓
Fixture management				
0x8004	COLOR_MODE	Calibrated / Extended	✓	✓
0x8301	EFFECT_SPEED	Set effects speed	✓	✓
0x8308	DISPLAY_ERRORS_ENABLE	Show errors in control panel display	✓	✓
0x8310	DIMMER_CURVE	Set dimmer curve	✓	✓
0x8312	DISPLAY_AUTO_OFF	Enable control panel display auto off	✓	✓
0x8325	VIDEO_TRACKING	Enable/disable video tracking mode	✓	✓
0x8326	DISPLAY_CONTRAST	Adjust control panel display contrast	✓	✓

PID	Name	Description	GET	SET
0x8329	HIBERNATION_MODE	Enable hibernation	✓	✓
0x832A	TUNGSTEN_MODE	Enable/disable tungsten emulation mode	✓	✓
0x8333	BACKLIGHT_IN_COMPACT_MODE	Backlight ON/OFF in Compact Mode	✓	✓
Pan/Tilt				
0x8400	PAN_TILT_SPEED	Set P/T speed	✓	✓
0x8402	PAN_TILT_LIMITATION_ENABLE	Enable P/T limits	✓	✓
0x8403	PAN_LIMITATION_MINIMUM	Pan minimum limit	✓	✓
0x8404	PAN_LIMITATION_MAXIMUM	Pan maximum limit	✓	✓
0x8405	TILT_LIMITATION_MINIMUM	Tilt minimum limit	✓	✓
0x8406	TILT_LIMITATION_MAXIMUM	Tilt maximum limit	✓	✓
0x8409	PAN_TILT_LIMITATION_RESET	Reset P/T limits		✓
Cooling fan operation				
0x8603	FAN_CLEAN	Fan clean mode	✓	✓
0x8604	FAN_MODE	Fan mode	✓	✓
Stand-alone operation with Martin Companion				
0x1030	CAPTURE_PRESET	Capture current scene	✓	✓
0x1031	PRESET_PLAYBACK	Stand-alone scene playback	✓	✓
0x8101	SYNCHRONIZED	Stand-alone sync mode	✓	✓
0x810B	PRESET_PLAYBACK_LIMIT	Stand-alone cue counter	✓	✓
0x810C	OFFLINE_MODE	Set behavior when DMX signal stops. Can be set to: - Hold Last Look - Blackout - Start Stand-Alone Show	✓	✓
0x810D	STAND-ALONE_CTRL_MODE	Show which DMX mode was used when programming current stand-alone show	✓	
0x8220	MANUAL_MODE_OVERRIDE	Remote manual control via Martin Companion	✓	✓

Operating the fixture

Warning! Read the Safety and Installation Manual that is included at the end of this User Manual, paying particular attention to the Safety Precautions and to the information on Dimming Zones in the Physical Installation chapter, before operating the fixture.

Make sure that Dimming Zones are correctly configured for the fixture's location and that the fixture has not been moved since they were configured before applying power to the fixture, or you may create a risk of eye injury.

The output of LEDs, like all light sources, changes gradually over many thousands of hours of use. If you require products to perform to very precise color specifications, you may eventually need to make small readjustments at the lighting controller.

Controlling via DMX

Once you have set up fixtures' DMX modes and DMX addresses, you can control fixtures using the DMX controller that is connected to the installation. See the 'DMX protocols' section at the end of this manual for details of the control options available.

Control menus

Default settings are given in **bold print**.

Menus marked with a battery icon below are available when the fixture is not connected to power.

Menu level 1	Menu level 2	Menu level 3	Notes
DMX SETUP			
DMX ADDRESS	**1** - 512		Set DMX address **(default address = 1)**
CONTROL MODE	COMPACT		Set DMX control mode
	BASIC		
	LUDICROUS		
DMX UNIVERSE	**1** - 63999		Set DMX universe
ETHERNET SETUP			
IP ADDRESS	XXX.XXX.XXX.XXX		Display fixture's static IP address
	PART 1 MSB		Set far left block (most significant byte) of IP address
	PART 2		Set middle left block of IP address
	PART 3		Set middle right block of IP address
	PART 4 LSB		Set far right block (least significant byte) of IP address
SUBNET MASK	XXX.XXX.XXX.XXX		
	EDIT SUBNET MASK	XXX.XXX.XXX.XXX	Display fixture's subnet mask
		XXX.XXX.XXX.XXX	Set subnet mask with 1-bit increments from the left
MAC ADDRESS	XX:XX:XX:XX:XX:XX		Display fixture's MAC address
RESET IP SETUP	RESET	ARE YOU SURE? →YES/NO	Reset static IP address and subnet mask to factory default values
FIXTURE ID			
1 – 65535			User-settable fixture ID / P3 ID number (default = 1)
PERSONALITY			
PAN/TILT	PAN INVERT	ON/**OFF**	Invert pan movement
	TILT INVERT	ON/**OFF**	Invert tilt movement
	LIMIT PAN/TILT	LIMIT ENABLE ON/**OFF**	Enable/disable pan/tilt limits
		PAN MIN	Set minimum pan angle limit
		PAN MAX	Set maximum pan angle limit
		TILT MIN	Set minimum tilt angle limit
		TILT MAX	Set maximum tilt angle limit
		RESET PAN/TILT LIMITS → ARE YOU SURE? → YES/NO	Remove pan and tilt limits (reset pan and tilt ranges to factory defaults)

SPEED	PAN/TILT	STANDARD	Adjust speed of pan and tilt movement
		SMOOTH	
		FAST	
	EFFECT	**FOLLOW P/T**	Effects speed follows pan/tilt speed setting
		STANDARD	Adjust speed of effects movement
		SMOOTH	
		FAST	
DIMMER CURVE	LINEAR		Optically linear dimming curve
	SQUARE LAW		Square law dimming curve
	INV SQ LAW		Inverse square law dimming curve
	S-CURVE		S-curve (fixture emulates incandescent lamp voltage linear RMS dimming curve)
TUNGSTEN EMULATOR	**OFF**		Color temperature and dimming characteristics emulate incandescent tungsten lamp behavior
	ON		
COLOR MODE	**EXTENDED GAMUT**		Color mixing optimized for saturation
	CALIBRATED COLOR		Color mixing optimized for even color rendition across multiple fixtures
VIDEO TRACKING	ENABLED		Color fading optimized for speed of color changes
	DISABLED		Color fading optimized for smoothness
DMX RESET	**ON**		Fixture can be reset via DMX
	OFF		Fixture cannot be reset via DMX
COOLING MODE	CONSTANT FAN FULL		Fans optimized for maximum light intensity, fans run at full speed, light intensity reduced if necessary to keep fixture within temperature limits
	CONSTANT FAN MEDIUM		Fans run at medium speed, light intensity reduced if necessary to keep fixture within temperature limits
	CONSTANT FAN LOW		Fans run at low speed, light intensity reduced if necessary to keep fixture within temperature limits
	CONSTANT FAN ULOW		Fans optimized for lowest noise, fans run at ultra-low speed, light intensity reduced if necessary to keep fixture within temperature limits
	REGULATE FANS		Compromise between light intensity and quietness, fan speed temperature-regulated, light intensity only reduced if fans reach full speed and further action necessary to keep fixture within temperature limits

DISPLAY	DISPLAY SLEEP	10 MINUTES	Control panel display goes into sleep mode 10 minutes after last key press
		5 MINUTES	Control panel display goes into sleep mode 5 minutes after last key press
		2 MINUTES	Control panel display goes into sleep mode 2 minutes after last key press
		ON	Control panel permanently on
	DISPLAY INTENSITY	1 … 100%	Set control panel display intensity in % (default = **50%**)
	DISPLAY ROTATION	**NORMAL**	Control panel display orientation normal
		ROTATE 180	Control panel display inverted
	DISPLAY CONTRAST	3 … 100%	Set control panel display contrast (default = **41**)
ERROR MODE	**NORMAL**		Enable error messages and warnings in control panel display
	SILENT		Disable error messages and warnings in display (the status LED will still light to indicate fixture status if an error has been detected or the fixture has a warning)
HIBERNATION MODE	ON		Enable Hibernation Mode (light output set to zero, all effect movement disabled)
	OFF		Disable Hibernation Mode
STAND-ALONE	OFFLINE MODE	RUN-STAND-ALONE SHOW	Fixture behavior when control signal is not present or is lost. **WARNING!** Must be set to **BLACKOUT** before the fixture is used where people can come within 5 m (16.5 ft.) of the fixture.
		HOLD LAST LOOK	
		BLACKOUT	
	STAND-ALONE MODE	**INDIVIDUAL**	Fixture runs its own stand-alone show and ignores all external stand-alone synchronizing signals
		SYNC HOST	Fixture sends synchronizing stand-alone signals.
		SYNC CLIENT	Fixture listens for synchronizing stand-alone signals. It runs or stops its own stand-alone show if it receives start and stop signals from a SYNC HOST fixture.
	RECORD CURRENT LOOK		Stores current look as single-scene stand-alone show
BACKLIGHT IN COMPACT	ENABLE		Backlight LEDs follow color and intensity of Beam in Compact DMX Mode
	DISABLE		Backlight LEDs remain OFF in Compact DMX Mode

DIMMING ZONES	GLOBAL	ENABLE/DISABLE ALL	Enable/Disable ALL Dimming Zones
		ERASE ALL → ARE YOU SURE? YES/NO	Erase ALL Dimming Zones (set corners to default values)
	ZONE 1	STATE	Enable/Disable Dimming Zone 1
		TYPE	Display the shape of the Dimming Zone
		ERASE	Erase Dimming Zone 1 (set corners to default values)
		SHOW	Show Dimming Zone corners (fixture overrides pan/tilt controls and moves to the 4 stored corners, staying for 1 second in each corner and taking 1 second to move to the next corner)
		CORNER A	Moves fixture to Corner A / B / C / D and lights it up. You can now adjust position using arrow keys. Changes are stored when you exit this menu.
		CORNER B	
		CORNER C	
		CORNER D	
	ZONE 2 … ZONE 7	STATE	Enable/Disable Dimming Zone
		TYPE	Display the shape of the Dimming Zone
		ERASE	Erase Dimming Zone (set corners to default values)
		SHOW	Show Dimming Zone corners (fixture overrides pan/tilt controls and moves to the 4 stored corners, staying for 1 second in each corner and taking 1 second to move to the next corner)
		CORNER A	Moves fixture to Corner A / B / C / D and lights it up. You can now adjust position using arrow keys. Changes are stored when you exit this menu.
		CORNER B	
		CORNER C	
		CORNER D	
	ZONE 8	STATE	Enable/Disable Dimming Zone 8
		TYPE	Display the shape of the Dimming Zone
		ERASE	Erase Dimming Zone 8 (set corners to default values)
		SHOW	Show Dimming Zone corners (fixture overrides pan/tilt controls and moves to the 4 stored corners, staying for 1 second in each corner and taking 1 second to move to the next corner)
		CORNER A	Moves fixture to Corner A / B / C / D and lights it up. You can now adjust position using arrow keys. Changes are stored when you exit this menu.
		CORNER B	
		CORNER C	
		CORNER D	

DEFAULT SETTINGS			
FACTORY DEFAULT	LOAD	ARE YOU SURE? → YES/NO	Return all settings (except calibrations) to factory defaults
CUSTOM 1	LOAD	ARE YOU SURE? → YES/NO	Load Custom Settings 1
	SAVE	ARE YOU SURE? → YES/NO	Save current settings as Custom Settings 1
CUSTOM 2	LOAD	ARE YOU SURE? → YES/NO	Load Custom Settings 2
	SAVE	ARE YOU SURE? → YES/NO	Save current settings as Custom Settings 2
CUSTOM 3	LOAD	ARE YOU SURE? → YES/NO	Load Custom Settings 3
	SAVE	ARE YOU SURE? → YES/NO	Save current settings as Custom Settings 3
INFORMATION			
POWER ON TIME	TOTAL	0 … XXX HR	Display hours fixture has been powered on since manufacture (not user-resettable)
	RESETTABLE	CLEAR COUNTER? → YES/NO	Display hours fixture has been powered on since last counter reset (user-resettable)
POWER ON CYCLES	TOTAL	0 … XXX HR	Display number of times fixture has been powered on since manufacture (not user-resettable)
	RESETTABLE	CLEAR COUNTER? → YES/NO	Display number of times fixture has been powered on since last counter reset (user-resettable)
LED ON TIME	BEAM TOTAL	0 … XXX HR	Display hours Beam has been powered on since manufacture (not user-resettable)
	BEAM RESETTABLE	CLEAR COUNTER? → YES/NO	Display hours Beam has been powered on since last counter reset (user-resettable)
	BACKLIGHT TOTAL	0 … XXX HR	Display hours Backlight has been powered on since manufacture (not user-resettable)
	BACKLIGHT RESETTABLE	CLEAR COUNTER? → YES/NO	Display hours Backlight has been powered on since last counter reset (user-resettable)
FIRMWARE VERSION	XX.XX.XX		Display currently active firmware version
RDM UID	XXXX.XXXXXXXX		Display fixture's unique RDM ID
FAN SPEEDS	HEAD FAN XXX	0 … XXX RPM	Scroll to display current speed of cooling fans
TEMPERATURES	UI … LED BOARD	CURRENT / MIN / MAX X C	Scroll through PCB temperature sensors, then display current, minimum and maximum temperature in °C of PCBs since fixture was last reset / powered on

DMX LIVE			
SOURCE	NO INPUT / DMX / ART-NET / SACN / P3		Current control data source
RATE	0 – 44 Hz		DMX transmission speed in packets per second
QUALITY	0 – 100%		Percentage of packets received
START CODE	0 – 255		Value of DMX start code
STROBE … P3 MIX BACKLIGHT	XXX		Scroll to see values being received on each DMX channel
TEST			
TEST ALL	BEAM DIMMER … TILT		Run test sequence of all functions. To test a specific function, use UP/DOWN buttons to scroll through functions. Press ENTER to pause and press again to restart test sequence. Press MENU button to exit test.
TEST LIGHTS	BEAM DIMMER ... BACKLIGHT VIRTUAL COLOR WHEEL		Run test sequence of light functionality only. Press MENU button to exit test
TEST PAN/TILT	PAN		Run test sequence of pan functions. Press MENU button to exit test
	TILT		Run test sequence of tilt functions. Press MENU button to exit test
MANUAL CONTROL			
RESET			Reset fixture
STROBE … FX SYNC			Scroll through effects, then manually control an effect
RECORD CURRENT LOOK	ARE YOU SURE?	YES/NO	Saves all current DMX values as stand-alone playback scene
SERVICE			
ERROR LIST	Empty or up to 20 errors		Show all error and warning messages stored in memory
FAN CLEAN	**OFF**		Run cooling fans at high speed to help dislodge dust and debris
	ON		

CALIBRATION	PAN	Calibration range varies depending on effect	Scroll through effects, press ENTER to select. Adjust position and press ENTER to confirm.
	TILT		
	CYAN		
	MAGENTA		
	YELLOW		
	LOAD DEFAULTS	LOAD	Load factory default calibration settings (or the calibration settings that have been saved with a SAVE command if the factory defaults have been overwritten)
	SAVE DEFAULTS	SAVE	Save current custom calibration settings as default settings. **Important!** This will permanently overwrite the factory default calibration settings and should normally be used by Martin Service only!
EXPECTED MODULES **Important!** For use by (or with guidance from) Martin Service only!	MODULE STATUS	PIXELSBEAM1: FOUND/MISSING	FOUND = communication / connection, MISSING = no communication / connection with the module
	UNKNOWN MODULE	NONE AVAILABLE	Every module is known
		XXXX (can be PIXELSBEAM1)	One module blinks red with an LED – identify which module is blinking and chose the module from the UNKNOWN MODULE list to make it known
	DELETE MODULE	PIXELSBEAM1	**Caution!** Deletes the purpose of the module and makes it UNKNOWN
	CONSOLIDATE FIXTURE	JOIN NEW UI	In case of SR NO MISMATCH warning, JOIN NEW UI consolidates saved data from the modules to the UI. Select this command when a new UI is swapped in a fixture. The fixture still works with the SR NO MISMATCH warning, but the modules do not share calibration/adjustment data with the UI.
		JOIN NEW MODULES	In case of SR NO MISMATCH warning, JOIN NEW MODULES consolidates saved data from the UI to the modules. Select this command when a new module is installed in a fixture. The fixture still works with the SR NO MISMATCH warning, but the UI does not share calibration/adjustment data with the modules.
FIXTURE TO FIXTURE FW	UPLOAD VIA DMX512	STOP / START / FORCE	Set fixture to upload its firmware to all other fixtures of same type on the data link
	UPLOAD VIA ART-NET	STOP / START / FORCE	
	UPLOAD SPEED	HIGH SPEED / HIGH STABILITY	Select fixture-to-fixture firmware upload speed. HIGH STABILITY takes more time but is more reliable.

Service and diagnostic messages

The MAC One Beam gives service and diagnostic information by displaying a large 3- or 4-character short code and a smaller full-text message in the fixture's display. The short code is visible at a distance, allowing easier reading with the fixture still in the rig, for example, while the full-text message gives more detailed information.

Excessively high temperatures

If any of the temperature sensors reports that the fixture has exceeded its recommended temperature range, the fixture reports a temperature warning and reduces light output to reduce its temperature. If the temperature reaches a dangerous level, light output is shut down completely and the fixture displays a temperature cutoff error message.

Temperature warnings are canceled and full light output becomes available again as soon as the temperature returns to normal.

Warning messages

Warning messages indicate that either:

- problems might appear in the future if no action is taken, or
- the user needs to pay special attention to a function or procedure when working with the fixture.

The MAC One Beam communicates warnings as follows:

- Warning codes are shown continuously in the display and disappear when the user reacts to the warning.
- If more than one warning is detected, all warnings are displayed in sequence.
- If the display is inactive, the fixture's status LED (see Figure 2 on page 10) flashes orange to indicate that there is a warning. Activating the display will show the warning.

The possible warning messages are listed in the table below:

Short code	Long message	Explanation
AUTC	AURA TMP CUT OFF	Backlight high temperature cutoff activated
AUTW	AURA TMP HIGH	Backlight high temperature detected
BANK	BANK NO ACCESS	Error unpacking firmware bank during/after software upload. Fixture will continue to operate on existing firmware. Warning message is cleared by a successful software upload or at the next power off/on cycle.
LDTW	LED DRV TMP HIGH	LED driver high temperature warning.
LETW	LED BOARD TEMP HIGH	LED PCB high temperature warning.
UITW	UI TEMP HIGH	User interface (LCD display and control panel) high temperature warning.
DMZW	NO DIMMING ZONE SET	Fixture is at low output intensity because no dimming zone is set.

Error messages

Error messages indicate that a problem is present. The MAC One Beam communicates errors as follows:

- Error messages flash in the display.
- If more than one error is detected, the fixture flashes all errors three times each.
- Errors are shown in the display regardless of display status: they override an inactive display and any other information that the display might be showing.
- If an error is present, the status LED flashes red.

The possible error messages are listed in the table below:

Short code	Long message	Explanation
ACER	AURA CALIB ERROR	Backlight calibration error
AUTE	AURA TMP SEN ERR	Backlight temperature sensor error
BANK	BANK NO ACCESS	Error unpacking firmware bank during/after software upload. Fixture will continue to operate on existing firmware. Warning message is cleared by a successful software upload or at the next power off/on cycle.
CELD	COM ERR LED DRV	LED driver communication error
COLD	FIXTURE COLD	Fixture too cold. Mechanical effects movement is disabled until fixture has warmed up.
CYER	CYAN ERROR	Cyan flag has motor or sensor error.
FAN	HEAD FAN 1 ERR	Head fan 1 error
FBEP	PAN FBACK ERR	Pan position magnetic indexing system timeout. Fixture is unable to correct pan position (but pan movement will often still be possible).
FBET	TILT FBACK ERR	Tilt position magnetic indexing system timeout. Fixture is unable to correct tilt position (but pan movement will often still be possible).
LAER	LAMP ERROR	Beam light source defective. Do not use fixture. Refer to authorized Martin Service agent for service.
LDTC	LED TEMP CUT OFF	LED high temperature cutoff activated.
LDTE	LED TEMP SEN ERR	LED temperature sensor error.
LETC	LED BOARD TMP CUT OFF	LED PCB high temperature cutoff activated.
LETE	LED BOARD SEN ERR	LED PCB temperature sensor error.
MAER	MAGENTA ERROR	Magenta flag has motor or sensor error.
MMER	MISSING MODULE	Impossible to communicate with a module that should be present.
PAER	PAN ERROR	Pan position indexing system timeout.
PSER	PAN SENSOR ERR	Fixture unable to retrieve data from pan position sensor
TIER	TILT ERROR	Tilt position indexing system timeout.
TSER	TILT SENSOR ERR	Fixture unable to retrieve data from tilt position sensor.

UITC	UI TEMP CUT OFF	User interface (LCD display and control panel) high temperature cutoff activated.
UITE	UI TEMP SEN ERR	User interface (LCD display and control panel) temperature sensor error.
YEER	YELLOW ERROR	Yellow flag has motor or sensor error.

DMX protocols

Compact DMX Mode

19 DMX channels

In Compact mode, the Backlight LEDs are inactive by default. However, you can activate them to light up and follow the colors and intensity set for the Beam if you enable *Compact Mode Backlight* on the Control/Settings DMX channel.

Channel	DMX Value	Function	Fade type	Default value
1	0–19 20–49 50–200 201–210 211–255	**Strobe/shutter** Shutter closed Shutter open Strobe (slow → fast) Shutter open Random strobe (slow → fast)	Snap	30
2 **3**	0–65535	**Dimmer** Closed → Open	Fade	0
4 **5**	0–65535	**Red** Intensity 0 → 100%	Fade	65535
6 **7**	0–65535	**Green** Intensity 0 → 100%	Fade	65535
8 **9**	0–65535	**Blue** Intensity 0 → 100%	Fade	65535
10	0–38 39 … 147 148 149 … 255	**CTC** 2 000 K 2 050 K … 7 450 K 7 500 K 7 550 K … 12 850 K	Fade	148
11	0 1–126 127–128 129–254 255	**Tint (Green Magenta Shift)** Δuv - 0.05 (full shift towards magenta) Δuv - 0.05 → Δuv 0.00 Δuv 0.00 (no shift - on black body curve) Δuv 0.00 → Δuv + 0.05 Δuv + 0.05 (full shift towards green)	Fade	128

		Beam virtual color wheel		
		Solid colors		
	0	White		
	1	Red		
	2	Yellow		
	3	Lime		
	4	Light Cyan		
	5	Purple		
	6	Blue		
	7	Cyan		
	8	White		
	9	Green		
	10	Cyan		
	11	Azure		
	12	Light Magenta		
	13	Orange		
	14	Red		
	15	Magenta		
	16	White		
	17	Blue		
	18	Magenta		
	19	Pink		
	20	Light Yellow		
	21	Spring Green		
	22	Green		
	23	Yellow		
		Split colors (every split has three distinct steps)		
	24	White		
12	25 - 27	Split White - Red	Snap	0
	28	Red		
	29 - 31	Split Yellow - Red		
	32	Yellow		
	33	Lime		
	34 - 36	Split Light Cyan - Lime		
	37	Light Cyan		
	38 - 40	Split Light Cyan - Purple		
	41	Purple		
	42	Blue		
	43 - 45	Split Cyan - Blue		
	46	Cyan		
	47 - 49	Split White - Cyan		
	50	White		
	51 - 53	Split White - Green		
	54	Green		
	55 - 57	Split Cyan - Green		
	58	Cyan		
	59	Azure		
	60 - 62	Split Light Magenta - Azure		
	63	Light Magenta		
	64 - 66	Split Light Magenta - Orange		
	67	Orange		
	68	Red		
	69 - 71	Split Magenta - Red		
	72	Magenta		
	73 - 75	Split White - Magenta		
	76	White		
	77 - 79	Split White - Blue		
	80	Blue		

	81 - 83 84 85 86 - 88 89 90 - 92 93 94 95 - 97 98 99 - 101 102 103 - 111 112 - 118 119 - 125 126 - 132 133 - 139 140 - 146 147 - 153 154 - 160 161 - 167 168 - 174 175 – 181 182 - 188 189 - 195 196 - 202 203 - 209 210 - 216 217 – 223 224 - 230 231 - 237 238 - 239 240 241 - 255	Split Magenta - Blue Magenta Pink Split Light Yellow - Pink Light Yellow Split Light Yellow - Spring Green Spring Green Green Split Yellow - Green Yellow Split White - Yellow White *No Function* **Color Shake** Shake White - Red slow → fast Shake Yellow - Red slow → fast Shake Light Cyan - Lime slow → fast Shake Light Cyan - Purple slow → fast Shake Cyan - Blue slow → fast Shake White - Cyan slow → fast Shake White - Green slow →fast Shake Cyan - Green slow → fast Shake Light Magenta - Azure slow → fast Shake Light Magenta - Orange slow → fast Shake Magenta - Red slow → fast Shake White - Magenta slow → fast Shake White - Blue slow → fast Shake Magenta - Blue slow → fast Shake Light Yellow - Pink slow → fast Shake Light Yellow - Spring Green slow → fast Shake Yellow - Green slow → fast Shake White - Yellow slow → fast *No Function* **Random Color** Stop at the currently selected position Random color slow → fast		
13 **14**	0–65535	**Pan** Left → right	Fade	32768
15 **16**	0–65535	**Tilt** Forward → backward	Fade	32768

17		**Fixture control / settings**	Snap	0
	0 - 9	*No function (default)*		
	10 - 14	Reset fixture (5 sec.)		
	15	*No function*		
	16	Reset color (5 sec.)		
	17	*No function*		
	18	Reset pan & tilt (5 sec.)		
	19 - 22	*No function*		
	23	Dimming curve = Linear (1 sec.)		
	24	Dimming curve = Square Law (default, 1 s.)		
	25	Dimming curve = Inverse Square Law (1 s.)		
	26	Dimming curve = S-Curve (1 sec.)		
	27	Pan and tilt speed = Standard (1 sec.)		
	28	Pan and tilt speed = Fast (default, 1 sec.)		
	29	Pan and tilt speed = Smooth (1 sec.)		
	30 - 35	*No function*		
	36	Video tracking = ON		
	37	Video tracking = OFF (default, 1 sec.)		
	38	Color mode = Extended Gamut (default, 1 s.)		
	39	Color mode = Calibrated Color (1 sec.)		
	40 - 51	*No function*		
	52	Display = ON (default, 1 sec.)		
	53	Display = OFF (1 sec.)		
	54	Fan speed = Regulated (default, 1 sec.)		
	55	Fan speed = Constant Full (1 sec.)		
	56	Fan speed = Constant Medium (1 sec.)		
	57	Fan speed = Constant Low (1 sec.)		
	58	Fan speed = Constant Ultra Low (1 sec.)		
	59 - 60	*No function*		
	61	Hibernation Mode = ON (5 sec.)		
	62	Hibernation Mode = OFF (default, 5 sec.)		
	63 - 64	*No function*		
	65	Pan & tilt limits = ON (5 sec.)		
	66	Pan & tilt limits = OFF (default, 5 sec.)		
	67	Pan & tilt limits - Store lower pan limit (5 sec.)		
	68	Pan & tilt limits - Store upper pan limit (5 s.)		
	69	Pan & tilt limits - Store lower tilt limit (5 sec.)		
	70	Pan & tilt limits - Store upper tilt limit (5 sec.)		
	71	Pan & tilt limits - Reset (5 sec.)		
	72	Tungsten emulation = ON (1 sec.)		
	73	Tungsten emulation = OFF (default, 1 sec.)		
	74	Stand-alone record current look (5 sec.)		
	75	Offline = Run stand-alone show (5 sec.)		
	76	Offline = Hold last look (5 sec.)		
	77	Offline = Blackout (default, 5 sec.)		
	78 - 91	*No function*		
	92	Compact Mode Backlight = ON (1 sec.)		
	93	Compact Mode Backlight = OFF (default, 1 sec.)		
	94 - 99	*No function*		
	100	Enable calibration		
	101	Store pan & tilt calibration (5 sec.)		
	102	Store dimmer calibration (5 sec.)		
	103	Store Cyan calibration (5 sec.)		
	104	Store Magenta calibration (5 sec.)		
	105	Store Yellow calibration (5 sec.)		

	106 - 198 199 200 - 255	*No function* Reset all calibration values to factory default (5 sec.) *No function*		
18		**Dimming Zones control** **Global control**	Snap	0
	0	*No function* (default)		
	1	Enable all dimming zones (1 sec.)		
	2	Disable all dimming zones (1 sec.)		
	3	Erase all dimming zones (5 sec.)		
		Dimming Zone 1		
	4	Enable Dimming Zone 1 (1 sec.)		
	5	Disable Dimming Zone 1 (1 sec.)		
	6	Erase Dimming Zone 1 (5 sec.)		
	7	Program Dimming Zone 1 corner A (1 sec.)		
	8	Program Dimming Zone 1 corner B (1 sec.)		
	9	Program Dimming Zone 1 corner C (1 sec.)		
	10	Program Dimming Zone 1 corner D (1 sec.)		
	11	Go to Dimming Zone 1 corner A		
	12	Go to Dimming Zone 1 corner B		
	13	Go to Dimming Zone 1 corner C		
	14	Go to Dimming Zone 1 corner D		
	15	Show Dimming Zone 1 corners		
		Dimming Zone 2		
	16	Enable Dimming Zone 2 (1 sec.)		
	17	Disable Dimming Zone 2 (1 sec.)		
	18	Erase Dimming Zone 2 (5 sec.)		
	19	Program Dimming Zone 2 corner A (1 sec.)		
	20	Program Dimming Zone 2 corner B (1 sec.)		
	21	Program Dimming Zone 2 corner C (1 sec.)		
	22	Program Dimming Zone 2 corner D (1 sec.)		
	23	Go to Dimming Zone 2 corner A		
	24	Go to Dimming Zone 2 corner B		
	25	Go to Dimming Zone 2 corner C		
	26	Go to Dimming Zone 2 corner D		
	27	Show Dimming Zone 2 corners		
		Dimming Zone 3		
	28	Enable Dimming Zone 3 (1 sec.)		
	29	Disable Dimming Zone 3 (1 sec.)		
	30	Erase Dimming Zone 3 (5 sec.)		
	31	Program Dimming Zone 3 corner A (1 sec.)		
	32	Program Dimming Zone 3 corner B (1 sec.)		
	33	Program Dimming Zone 3 corner C (1 sec.)		
	34	Program Dimming Zone 3 corner D (1 sec.)		
	35	Go to Dimming Zone 3 corner A		
	36	Go to Dimming Zone 3 corner B		
	37	Go to Dimming Zone 3 corner C		
	38	Go to Dimming Zone 3 corner D		
	39	Show Dimming Zone 3 corners		
		Dimming Zone 4		
	40	Enable Dimming Zone 4 (1 sec.)		
	41	Disable Dimming Zone 4 (1 sec.)		
	42	Erase Dimming Zone 4 (5 sec.)		
	43	Program Dimming Zone 4 corner A (1 sec.)		
	44	Program Dimming Zone 4 corner B (1 sec.)		
	45	Program Dimming Zone 4 corner C (1 sec.)		
	46	Program Dimming Zone 4 corner D (1 sec.)		
	47	Go to Dimming Zone 4 corner A		
	48	Go to Dimming Zone 4 corner B		

18 (contd.)	49	Go to Dimming Zone 4 corner C		
	50	Go to Dimming Zone 4 corner D		
	51	Show Dimming Zone 4 corners		
		Dimming Zone 5		
	52	Enable Dimming Zone 5 (1 sec.)		
	53	Disable Dimming Zone 5 (1 sec.)		
	54	Erase Dimming Zone 5 (5 sec.)		
	55	Program Dimming Zone 5 corner A (1 sec.)		
	56	Program Dimming Zone 5 corner B (1 sec.)		
	57	Program Dimming Zone 5 corner C (1 sec.)		
	58	Program Dimming Zone 5 corner D (1 sec.)		
	59	Go to Dimming Zone 5 corner A		
	60	Go to Dimming Zone 5 corner B		
	61	Go to Dimming Zone 5 corner C		
	62	Go to Dimming Zone 5 corner D		
	63	Show Dimming Zone 5 corners		
		Dimming Zone 6		
	64	Enable Dimming Zone 6 (1 sec.)		
	65	Disable Dimming Zone 6 (1 sec.)		
	66	Erase Dimming Zone 6 (5 sec.)		
	67	Program Dimming Zone 6 corner A (1 sec.)		
	68	Program Dimming Zone 6 corner B (1 sec.)		
	69	Program Dimming Zone 6 corner C (1 sec.)		
	70	Program Dimming Zone 6 corner D (1 sec.)		
	71	Go to Dimming Zone 6 corner A		
	72	Go to Dimming Zone 6 corner B		
	73	Go to Dimming Zone 6 corner C		
	74	Go to Dimming Zone 6 corner D		
	75	Show Dimming Zone 6 corners		
		Dimming Zone 7		
	76	Enable Dimming Zone 7 (1 sec.)		
	77	Disable Dimming Zone 7 (1 sec.)		
	78	Erase Dimming Zone 7 (5 sec.)		
	79	Program Dimming Zone 7 corner A (1 sec.)		
	80	Program Dimming Zone 7 corner B (1 sec.)		
	81	Program Dimming Zone 7 corner C (1 sec.)		
	82	Program Dimming Zone 7 corner D (1 sec.)		
	83	Go to Dimming Zone 7 corner A		
	84	Go to Dimming Zone 7 corner B		
	85	Go to Dimming Zone 7 corner C		
	86	Go to Dimming Zone 7 corner D		
	87	Show Dimming Zone 7 corners		
		Dimming Zone 8		
	88	Enable Dimming Zone 8 (1 sec.)		
	89	Disable Dimming Zone 8 (1 sec.)		
	90	Erase Dimming Zone 8 (5 sec.)		
	91	Program Dimming Zone 8 corner A (1 sec.)		
	92	Program Dimming Zone 8 corner B (1 sec.)		
	93	Program Dimming Zone 8 corner C (1 sec.)		
	94	Program Dimming Zone 8 corner D (1 sec.)		
	95	Go to Dimming Zone 8 corner A		
	96	Go to Dimming Zone 8 corner B		
	97	Go to Dimming Zone 8 corner C		
	98	Go to Dimming Zone 8 corner D		
	99	Show Dimming Zone 8 corners		
	100 - 255	*No function*		

19	0 1–127 128 129–254 255	**Beam PWM frequency** *No function* Variable -2% – 0% 19200 Hz Variable 0% – +2% *No function*	Fade	128

Basic DMX Mode

35 DMX channels

Channel	DMX Value	Function	Fade type	Default value
Channels 1–19 as in Compact Mode				
Beam control				
20	0–26 27 27–228 228 229–255	**Beam P3 Mix** ***DMX Mode*** Pure DMX control, P3 pixel data is ignored ***Mix Mode*** Pure DMX control, P3 pixel data is ignored Crossfade DMX → P3 pixel control Pure P3 pixel control, DMX is ignored ***Video Mode*** Intensity set by P3 pixel, color set by DMX channels (DMX channels "color" the P3 pixel data)	Snap	0
21	0–255	**FX 1** (see table below) FX selection 1–255	Snap	0
22	0–126 127–129 130–255	**FX 1 adjust** Reverse fast → slow Stop Forward slow → fast	Snap	128
23	0–255	**FX 2** (see table below) FX selection 1–255	Snap	0
24	0–126 127–129 130–255	**FX 2 adjust** Reverse fast → slow Stop Forward slow → fast	Snap	128
25	0 1 2–34 35 36 37–100 101–120 121–140 141–255	**FX Synchronization** No sync Offset shift 10° Offset shift 20°–340° in 10° steps Offset shift 350° Synchronized (all fixtures start FX cycles at same time) *No function* Random FX cycle start (FX1 adjust controls overall speed) Random FX cycle duration *No function*	Snap	36

Backlight control (all LEDs controlled together)				
26	0–19 20–49 50–200 201–210 211–255	**Backlight strobe/shutter** Shutter closed Shutter open Strobe slow → fast Shutter open Random strobe slow → fast	Snap	30
27 **28**	0–65535	**Backlight dimmer** Closed → Open	Fade	0
29	0–255	**Backlight Red** Intensity 0 → 100%	Fade	255
30	0–255	**Backlight Green** Intensity 0 → 100%	Fade	255
31	0–255	**Backlight Blue** Intensity 0 → 100%	Fade	255
32	0–38 39 … 127 128 129 … 255	**Backlight CTC** 2 000 K 2 050 K … 6 450 K 6 500 K 6 550 K … 12 850 K	Fade	128
33	0 1–126 127–128 129–254 255	**Backlight Tint (Green-Magenta Shift)** Δuv - 0.05 (full shift towards magenta) Δuv - 0.05 → Δuv 0.00 Δuv 0.00 (no shift - on black body curve) Δuv 0.00 → Δuv + 0.05 Δuv + 0.05 (full shift towards green)	Fade	128
34	0–10 11–12 13–14 15–16 17–18 19–20 21–22 23–24 25–26 27–28 29–30 31–32 33–34 35–36 37–38 39–40 41–42 43–44 45–46 47–48 49–50 51–52 53–54	**Backlight virtual color wheel** ***Solid colors*** Open Moroccan Pink (LEE 790) Pink (LEE 157) Special Rose Pink (LEE 332) Follies Pink (LEE 328) Fuchsia Pink (LEE 345) Surprise Pink (LEE 194) Congo Blue (LEE 181) Tokyo Blue (LEE 071) Deep Blue (LEE 120) Just Blue (LEE 079) Medium Blue (LEE 132) Double CT Blue (LEE 200) Slate Blue (LEE 161) Full CT Blue (LEE 201) Half CT Blue (LEE 202) Steel Blue (LEE 117) Lighter Blue (LEE 353) Light Blue (LEE 118) Medium Blue Green (LEE 116) Dark Green (LEE 124) Primary Green (LEE 139) Moss Green (LEE 089)	Snap	0

34 (contd.)	55–56 57–58 59–60 61–62 63–64 65–66 67–68 69–70 71–72 73–74 75–76 77–78 79–80 81–82 83–84 85–86 87–88 89–90 91–92 93–94 95–96 97–98 99–100 101–102 103–104 105–106 107–190 191–214 215–219 220–243 244–255	Fern Green (LEE 122) Jas Green (LEE 738) Lime Green (LEE 088) Spring Yellow (LEE 100) Deep Amber (LEE 104) Chrome Orange (LEE 179) Orange (LEE 105) Gold Amber (LEE 021) Millennium Gold (LEE 778) Deep Golden Amber (LEE 135) Flame Red (LEE 164) Red Magenta (LEE 113) Medium Lavender (LEE 343) Pure White (White LEDs only) Pure Red (Red LEDs only) Pure Yellow (Red + Green LEDs only) Pure Green (Green LEDs only) Pure Cyan (Green + Blue LEDs only) Pure Blue (Blue LEDs only) Pure Magenta (Blue + Red LEDs only) Peacock Blue (LEE 115) Dark Lavender (LEE 180) Double CT Orange (LEE 287) Full CT Orange (LEE 204) Half CT Orange (LEE 205) Deep Straw (LEE 015) No function ***Continuous rotation*** CW, fast → slow Stop (wheel stops at current color) CCW, slow → fast ***Random colors*** Fast → slow		
35	0–26 27 27–228 228 229–255	**Backlight P3 Mix** ***DMX Mode*** Pure DMX control, P3 pixels are ignored ***Mix Mode*** Pure DMX control, P3 pixels are ignored Crossfade DMX → P3 pixel control Pure P3 pixel control ***Video Mode*** P3 with DMX overlay (DMX channels "color" the P3 pixel data)	Snap	0

Ludicrous DMX Mode

107 DMX channels

Channel	DMX Value	Function	Fade type	Default value
Channels 1–35 as in Basic Mode *Backlight RGB (channels 29-31) is merged with Backlight pixel control (channels 36-107) using HTP.*				
36	0–255	**Backlight Pixel 1 Red** 0 → 100%	Fade	0
37	0–255	**Backlight Pixel 1 Green** 0 → 100%	Fade	0
38	0–255	**Backlight Pixel 1 Blue** 0 → 100%	Fade	0
…	…	**…**		
105	0–255	**Backlight Pixel 24 Red** 0 → 100%	Fade	0
106	0–255	**Backlight Pixel 24 Green** 0 → 100%	Fade	0
107	0–255	**Backlight Pixel 24 Blue** 0 → 100%	Fade	0

Pixel mapping in Ludicrous Mode

Ludicrous DMX mode gives individual control of the Backlight pixels. These are numbered as shown in the drawing on the right with the fixture in hanging orientation, pan at 50% and display and connectors at back of fixture.

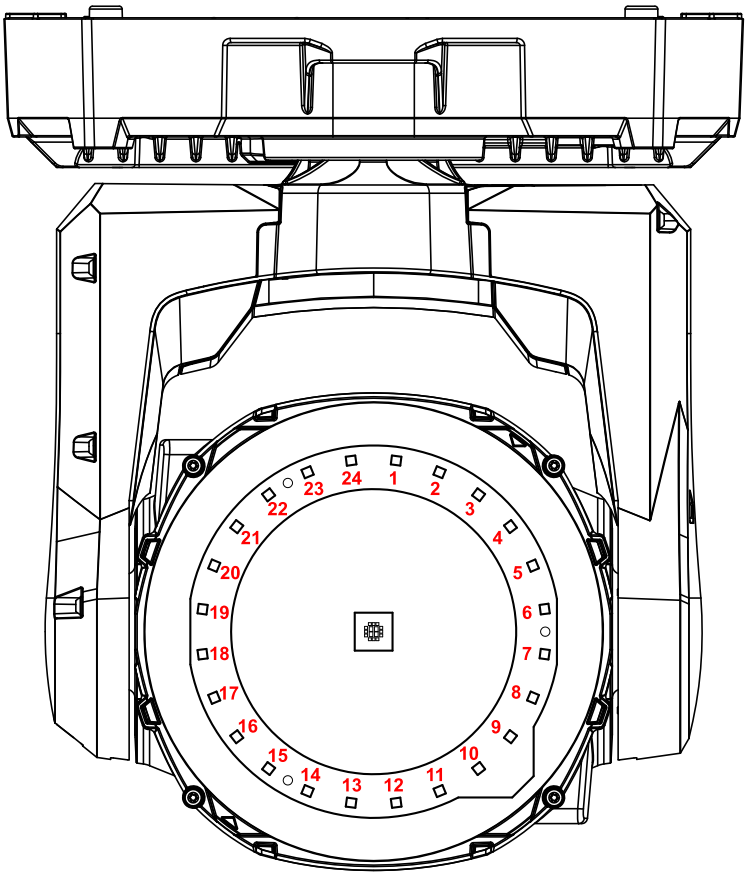

MAC One Beam Backlight pixel layout

Control orientation reference

Home position / Front of fixture

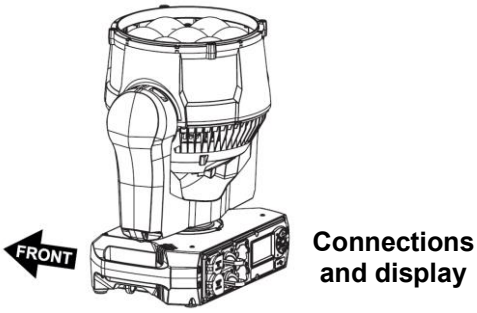

DMX disconnected

Tilt

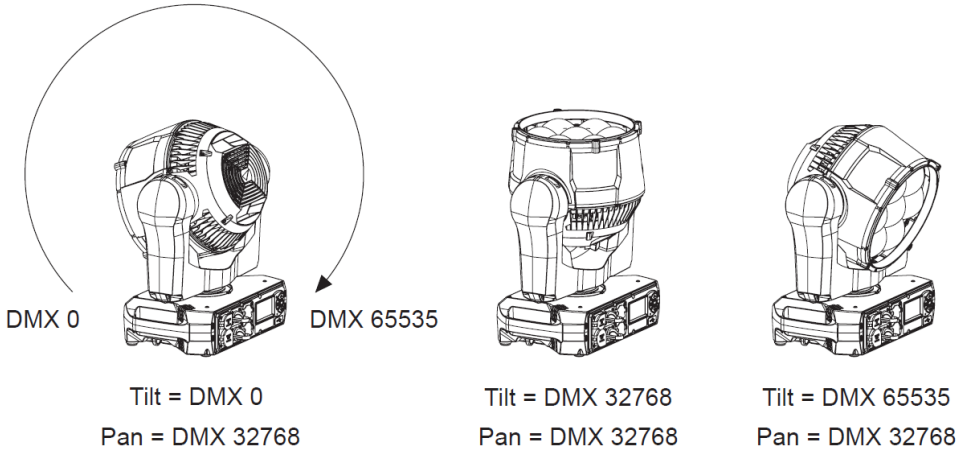

Tilt range 225°

Pan

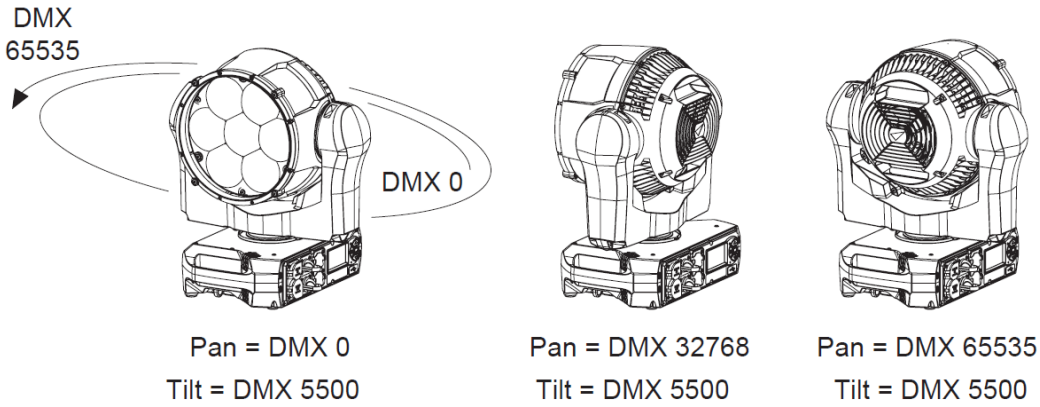

Pan range 540°

Fixture shown in drawings is for example purposes only

FX Macros

Beam Intensity FX

These FX modulate the intensity of the Beam while maintaining the color set by the RGB channels and P3 pixels. The color selected on the Beam virtual color wheel is used as background color.

- *For example, when the Beam virtual color wheel is set to 0 (open), the Beam 2x Strobe FX will strobe normal color on a black background.*
- *For example, when the Beam virtual color wheel is set to Green, the Beam 2x Strobe FX will strobe normal color on a green background.*

DMX Value	Effect	Description
1	Beam Strobe Width	Modifies pulse width of strobe patterns selected via the Beam strobe/shutter channel
2	Beam Blackout Strobe	Flashes of Beam going dark
3	Beam 2x Strobe	Bursts of two strobe flashes
4	Beam 3x Strobe	Bursts of three strobe flashes
5	Beam 4x Strobe	Bursts of four strobe flashes
6	Beam Up, Down, Flash	Fading up, fading down and then flashing
7	Beam Up, Down, Flash Second Color	Fading up, fading down and then flashing in second color selected via Beam virtual color wheel
8	Beam Up, Flash, Down, Flash	Fading up, flashing, fading down and then flashing again
9	Beam Up, Flash, Down, Flash Second Color	Fading up, flashing, fading down and then flashing again in second color selected via Beam virtual color wheel
10	Beam Random Levels	Random intensity levels
11	Beam Movie Flicker	Mimic old movie flicker
12	Beam Atomic Lighting	Mimic lightning
13	Beam Thunderstorm	Mimic thunderstorm
14 - 17	*No effect*	

Beam Color FX

These FX override the Beam color set by the RGB channels, virtual color wheel and P3 pixels.

DMX Value	Effect	Description
18	Beam Red White Blue Step	Red-white-blue bump without crossfade
19	Beam Red White Blue Fade	Red-white-blue bump with crossfade
20	Beam Fire	Mimic fire
21	Beam Water	Mimic water
22	Beam Swimming pool	Mimic swimming pool
23	Beam Ice	Mimic ice
24	Beam Hot and cold	Hot and cold colors
25	Beam Warm and fuzzy	Warm and fuzzy colors
26	Beam Silver and gold	Strobe of silver with hit of gold

27	Beam Gold and silver	Strobe of gold with hit of silver
28	Beam Electric Arc	Mimic electric arc
29	Beam Plasma	Mimic plasma
30 - 33	*No effect*	

Beam Color Modifier FX

These FX shift the Beam color set by the RGB channels, virtual color wheel and P3 pixels.

DMX Value	Effect	Description
34	Beam Spectrum Shifter Static	Shift color spectrum with FX speed channel controlling the offset versus the starting color
35	Beam Spectrum Shifter Step	Step through offset colors with FX speed channel controlling the maximum offset versus the starting color
36	Beam Spectrum Shifter Fade	Fade through offset colors with FX speed channel controlling the maximum offset versus the starting color
37	Beam Color Toggle Step	Step between color set by RGB channels + P3 pixels and color set by virtual color wheel
38	Beam Color Toggle Fade	Fade between color set by RGB channels + P3 pixels and color set by virtual color wheel
39	Beam tungsten	Mimic tungsten color shift
40	Beam tungsten delay	Mimic tungsten color shift and delayed dimming response
41 - 42	*No effect*	

Beam Timing FX

These FX modify the timing of the Beam.

DMX Value	Effect	Description
43	Beam Video SloMo	Average input from last frames controlled by FX speed channel to create slow-motion effect
44 - 47	*No effect*	

Backlight Intensity FX

These FX modulate the intensity of all Backlight LEDs together while maintaining the color(s) set by the RGB channels, RGB pixel channels and P3 pixels. The color selected on the Backlight virtual color wheel is used as background color.

- For example, when the Backlight virtual color wheel is set to 0 (open), the Backlight 2x Strobe FX will strobe normal color on a black background.
- For example, when the Backlight virtual color wheel is set to Green, the Backlight 2x Strobe FX will strobe normal color on a green background.

DMX Value	Effect	Description
48	Backlight Strobe Width	Modifies pulse width of strobe patterns selected via the Backlight strobe/shutter channel

49	Backlight Blackout Strobe	Flashes of Backlight going dark
50	Backlight 2x Strobe	Bursts of two strobe flashes
51	Backlight 3x Strobe	Bursts of three strobe flashes
52	Backlight 4x Strobe	Bursts of four strobe flashes
53	Backlight Up, Down, Flash	Fading up, fading down and then flashing
54	Backlight Up, Down, Flash Second Color	Fading up, fading down and then flashing in second color selected via Backlight virtual color wheel
55	Backlight Up, Flash, Down, Flash	Fading up, flashing, fading down and then flashing again
56	Backlight Up, Flash, Down, Flash Second Color	Fading up, flashing, fading down and then flashing again in second color selected via Backlight virtual color wheel
57	Backlight Random Levels	Random intensity levels
58	Backlight Movie Flicker	Mimic old movie flicker
59	Backlight Atomic Lighting	Mimic lightning
60	Backlight Thunderstorm	Mimic thunderstorm
61 - 64	*No effect*	

Backlight Pixel FX

These FX use individual Backlight pixels for animated effects while maintaining the color(s) set by the RGB channels, RGB pixel channels and P3 pixels. Also for these effects the Backlight virtual color wheel can be used to select a background color.

DMX Value	Effect	Description
65	Backlight PixelKiller	Pixels turning on/off one by one when fading the FX speed channel
66	Backlight SparkleStars	Sparkling effect
67	Backlight SparkleStars Heavy	Heavy sparkling effect
68	Backlight Lightning Flashes Random	Random lightning flashes
69	Backlight Lightning Flashes Random Heavy	Heavy random lightning flashes
70	Backlight Lightning Flashes Left-Right	Horizontal lightning flashes
71	Backlight Lightning Flashes Top-Bottom	Vertical lightning flashes
72	Backlight Starfield	Mimic spinning starfield
73	Backlight Fiber Optic	Mimic fiber optic effect
74	Backlight Noise	Overlays noise
75	Backlight Build Up/Down Step	Pixels turning on/off in order without crossfade
76	Backlight Build Up/Down Fade	Pixels turning on/off in order with crossfade
77	Backlight Build Up/Down Random Step	Pixels turning on/off in random order without crossfade
78	Backlight Build Up/Down Random Fade	Pixels turning on/off in random order with crossfade
79	Backlight Random 1 LED Step	Random 1 pixel chase without crossfade
80	Backlight Random 1 LED Fade	Random 1 pixel chase with crossfade
81	Backlight Random 2 LED Step	Random 2 pixels chase without crossfade

82	Backlight Random 2 LED Fade	Random 2 pixels chase with crossfade
83	Backlight Random 4 LED Step	Random 4 pixels chase without crossfade
84	Backlight Random 4 LED Fade	Random 4 pixels chase with crossfade
85	Backlight Random 8 LED Step	Random 8 pixels chase without crossfade
86	Backlight Random 8 LED Fade	Random 8 pixels chase with crossfade
87	Backlight Random 12 LED Step	Random 12 pixels chase without crossfade
88	Backlight Random 12 LED Fade	Random 12 pixels chase with crossfade
89	Backlight Random 16 LED Step	Random 16 pixels chase without crossfade
90	Backlight Random 16 LED Fade	Random 16 pixels chase with crossfade
91	Backlight Split Static	Half-half split Backlight which can be indexed
92	Backlight Split Rotating Step	Half-half split Backlight which rotates without crossfade
93	Backlight Split Rotating Fade	Half-half split Backlight which rotates with crossfade
94	Backlight Odd-Even Step	Odd-even chase without crossfade
95	Backlight Odd-Even Fade	Odd-even chase with crossfade
96	Backlight Odd-Even Dual Step	Odd-even pair chase without crossfade
97	Backlight Odd-Even Dual Fade	Odd-even pair chase with crossfade
98	Backlight 1-Radar Spin Step	1 pixel radar spinning without crossfade
99	Backlight 1-Radar Spin Fade	1 pixel radar spinning with crossfade
100	Backlight 2-Radar Spin Step	2 pixel radar spinning without crossfade
101	Backlight 2-Radar Spin Fade	2 pixel radar spinning with crossfade
102	Backlight 3-Radar Spin Step	3 pixel radar spinning without crossfade
103	Backlight 3-Radar Spin Fade	3 pixel radar spinning with crossfade
104	Backlight 4-Radar Spin Step	4 pixel radar spinning without crossfade
105	Backlight 4-Radar Spin Fade	4 pixel radar spinning with crossfade
106	Backlight 6-Radar Spin Step	6 pixel radar spinning without crossfade
107	Backlight 6-Radar Spin Fade	6 pixel radar spinning with crossfade
108	Backlight Slice Pie 1 Spin Step	Slice of pie spinning without crossfade
109	Backlight Slice Pie 1 Spin Fade	Slice of pie spinning with crossfade
110	Backlight Slice Pie 2 Spin Step	Two slices of pie spinning without crossfade
111	Backlight Slice Pie 2 Spin Fade	Two slices of pie spinning with crossfade
112	Backlight Slice Pie 3 Spin Step	Three slices of pie spinning without crossfade
113	Backlight Slice Pie 3 Spin Fade	Three slices of pie spinning with crossfade
114	Backlight Random Slice Pie Step	Random slice of pie chase without crossfade
115	Backlight Random Slice Pie Fade	Random slice of pie chase with crossfade
116	Backlight Snake 1 LED Step	Snake of 1 pixel spinning around without crossfade
117	Backlight Snake 1 LED Fade	Snake of 1 pixel spinning around with crossfade
118	Backlight Snake 2 LEDs Step	Snake of 2 pixels spinning around without crossfade
119	Backlight Snake 2 LEDs Fade	Snake of 2 pixels spinning around with crossfade
120	Backlight Snake 4 LEDs Step	Snake of 4 pixels spinning around without crossfade
121	Backlight Snake 4 LEDs Fade	Snake of 4 pixels spinning around with crossfade

122	Backlight Snake 8 LEDs Step	Snake of 8 pixels spinning around without crossfade
123	Backlight Snake 8 LEDs Fade	Snake of 8 pixels spinning around with crossfade
124	Backlight Snake 12 LEDs Step	Snake of 12 pixels spinning around without crossfade
125	Backlight Snake 12 LEDs Fade	Snake of 12 pixels spinning around with crossfade
126	Backlight Snake 16 LEDs Step	Snake of 16 pixels spinning around without crossfade
127	Backlight Snake 16 LEDs Fade	Snake of 16 pixels spinning around with crossfade
128	Backlight Nightrider Vertical	Pulsing line bouncing vertical
129	Backlight Nightrider Horizontal	Pulsing line bouncing horizontal
130	Backlight Snowflakes Vertical	Snowflakes falling vertical
131	Backlight Snowflakes Horizontal	Snowflakes falling horizontal
132	Backlight Rain Vertical	Raindrops falling vertical
133	Backlight Rain Horizontal	Raindrops falling horizontal
134	Backlight Vertical Line Step	Vertical line chase without crossfade
135	Backlight Vertical Line Fade	Vertical line chase with crossfade
136	Backlight Vertical Line Bounce Step	Vertical line bounce without crossfade
137	Backlight Vertical Line Bounce Fade	Vertical line bounce with crossfade
138	Backlight Horizontal Line Step	Horizontal line chase without crossfade
139	Backlight Horizontal Line Fade	Horizontal line chase with crossfade
140	Backlight Horizontal Line Bounce Step	Horizontal line bounce without crossfade
141	Backlight Horizontal Line Bounce Fade	Horizontal line bounce with crossfade
142	Backlight Vertical + Horizontal Line Bounce Step	Vertical and horizontal line bounce without crossfade
143	Backlight Vertical + Horizontal Line Bounce Fade	Vertical and horizontal line bounce with crossfade
144 - 147	*No effect*	

Backlight Color FX

These FX override the Backlight color(s) set by the RGB channels, RGB pixel channels, virtual color wheel and P3 pixels.

DMX Value	Effect	Description
148	Backlight Rainbow LEDs Step	Rainbow pattern without crossfade
149	Backlight Rainbow LEDs Fade	Rainbow pattern with crossfade
150	Backlight Random Rainbow LEDs Step	Random rainbow pattern without crossfade
151	Backlight Random Rainbow LEDs Fade	Random rainbow pattern with crossfade
152	Backlight Red-Yellow LEDs Step	Variations in red-yellow tint without crossfade
153	Backlight Red-Yellow LEDs Fade	Variations in red-yellow tint with crossfade
154	Backlight Yellow-Green LEDs Step	Variations in yellow-green tint without crossfade
155	Backlight Yellow-Green LEDs Fade	Variations in yellow-green tint with crossfade
156	Backlight Green-Cyan LEDs Step	Variations in green-cyan tint without crossfade
157	Backlight Green-Cyan LEDs Fade	Variations in green-cyan tint with crossfade

158	Backlight Cyan-Blue LEDs Step	Variations in cyan-blue tint without crossfade
159	Backlight Cyan-Blue LEDs Fade	Variations in cyan-blue tint with crossfade
160	Backlight Blue-Magenta LEDs Step	Variations in blue-magenta tint without crossfade
161	Backlight Blue-Magenta LEDs Fade	Variations in blue-magenta tint with crossfade
162	Backlight Magenta-Red LEDs Step	Variations in magenta-red tint without crossfade
163	Backlight Magenta-Red LEDs Fade	Variations in magenta-red tint with crossfade
164	Backlight Red White Blue Step	Red-white-blue bump without crossfade
165	Backlight Red White Blue Fade	Red-white-blue bump with crossfade
166	Backlight Fire	Mimic fire
167	Backlight Water	Mimic water
168	Backlight Swimming pool	Mimic swimming pool
169	Backlight Ice	Mimic ice
170	Backlight Hot and cold	Hot and cold colors
171	Backlight Warm and fuzzy	Warm and fuzzy colors
172	Backlight Silver and gold	Strobe of silver with hit of gold
173	Backlight Gold and silver	Strobe of gold with hit of silver
174	Backlight Electric Arc	Mimic electric arc
175	Backlight Plasma	Mimic plasma
176 - 179	*No effect*	

Backlight Color Modifier FX

These FX shift the Backlight color(s) set by the RGB channels, RGB pixel channels, virtual color wheel and P3 pixels.

DMX Value	Effect	Description
180	Backlight Spectrum Shifter Static	Shift color spectrum with FX speed channel controlling the offset versus the starting color(s)
181	Backlight Spectrum Shifter Step	Step through offset colors with FX speed channel controlling the maximum offset versus the starting color(s)
182	Backlight Spectrum Shifter Fade	Fade through offset colors with FX speed channel controlling the maximum offset versus the starting color(s)
183	Backlight Pixel Spectrum Shifter Static	Offset pixel colors with FX speed channel controlling the maximum offset versus the starting color(s)
184	Backlight Pixel Spectrum Shifter Step	Step pixels through offset colors with FX speed channel controlling the maximum offset versus the starting color(s)
185	Backlight Pixel Spectrum Shifter Fade	Fade pixels through offset colors with FX speed channel controlling the maximum offset versus the starting color(s)
186	Backlight Pixel Spectrum Shifter Random Static	Random offset pixel colors with FX speed channel controlling the maximum offset versus the starting color(s)

187	Backlight Pixel Spectrum Shifter Random Step	Random step pixels through offset colors with FX speed channel controlling the maximum offset versus the starting color(s)
188	Backlight Pixel Spectrum Shifter Random Fade	Random fade pixels through offset colors with FX speed channel controlling the maximum offset versus the starting color(s)
189	Backlight Color Toggle Step	Step between color(s) set by RGB channels + RGB pixel channels + P3 pixels and color set by virtual color wheel
190	Backlight Color Toggle Fade	Fade between color(s) set by RGB channels + RGB pixel channels + P3 pixels and color set by virtual color wheel
191	Backlight Tungsten	Mimic tungsten color shift
192	Backlight Tungsten Delay	Mimic tungsten color shift and delayed dimming response
193 - 196	*No effect*	

Backlight Timing FX

These FX modify the timing of the Backlight.

DMX Value	Effect	Description
197	Backlight Video SloMo	Average input from last frames controlled by FX speed channel to create slow-motion effect
198 - 201	*No effect*	

Beam & Backlight Combined FX

These FX operate both the Beam and the Backlight LEDs alternately or together, running effects over the entire fixture.

DMX Value	Effect	Description
202	Beam-Backlight Step	Beam-Backlight chase without crossfade
203	Beam-Backlight Fade	Beam-Backlight chase with crossfade
204	Backlight Ramp Beam Flash	Backlight fade plus Beam flash
205	Beam Ramp Backlight Flash	Beam fade plus Backlight flash
206	Full Thunderstorm	Mimic thunderstorm
207	Full Welding	Mimic welding
208	Full 3-Step Strobe	Chase Beam - Backlight - both
209 - 230	*No effect*	

Movement FX

These FX modulate the position (around the home position set by the Pan and Tilt channels), sometimes combined with the dimmer.

DMX Value	Effect	Description
231	Pan and Tilt Circle Small	Small circle
232	Pan and Tilt Circle Medium	Medium circle
233	Pan and Tilt Circle Large	Large circle
234	Pan and Tilt Figure 8 Small	Small 8
235	Pan and Tilt Figure 8 Medium	Medium 8
236	Pan and Tilt Figure 8 Large	Large 8
237	Pan and Tilt Diagonal Line Small	Small line
238	Pan and Tilt Diagonal Line Medium	Medium line
239	Pan and Tilt Diagonal Line Large	Large line
240	Pan and Tilt Square Small	Small square
241	Pan and Tilt Square Medium	Medium square
242	Pan and Tilt Square Large	Large square
243	Tilt Sawtooth with Dimmer	Tilt and dimmer fading, then snap to home and full
244	Pan Sawtooth with Dimmer	Pan and dimmer fading, then snap to home and full
245 - 249	*No effect*	

Pixel Mask FX

These FX contain a library of static intensity masks.

DMX Value	Effect	Description
250	*No effect*	
251	Backlight Pixel Masks Static	Library of static pixel intensity patterns which can be selected via the FX speed channel
252	*No effect*	

Color Look FX

These FX contain a library of static color looks.

DMX Value	Effect	Description
253	*No effect*	
254	Backlight Color Looks Static	Library of static colored pixel patterns which can be selected via the FX speed channel

Dimming curve FX

This FX applies a dimmer curve to virtual dimmers used on a lighting console.

DMX Value	Effect	Description
255	Virtual dimmer square law	Enhances bottom end of dimming range when using virtual dimmer on Backlight pixel RGB channels

Accessories and service procedures

Warning! Read the Safety and Installation Manual that is included at the end of this User Manual, paying particular attention to the Safety Precautions section, before carrying out service on the fixture.

Do not remove any cover from the fixture unless the fixture is in a dry location under dry conditions.

This section gives instructions for service procedures that may be carried out by the user. For any procedure that is not described below or in the fixture's Safety and Installation Manual, please contact your Martin supplier for assistance.

Uploading new firmware

Important! Do not switch the fixture off or disconnect the source of the firmware during an update, or the firmware will be corrupted.

Fixture information and settings are not affected when you upload new firmware to the fixture.

All MAC One Beam fixtures that are powered on and connected via a DMX link to the fixture that you update will also have their firmware updated.

If you update firmware to a newer version, check the MAC One Beam area of www.martin.com to see whether an updated version of the fixture's User Manual is available for the new firmware.

You can check the currently installed firmware version in the INFORMATION menu in the fixture's control panel. Firmware updates can be downloaded automatically from the Martin cloud using the Martin Companion software suite on a PC connected to the Internet.

You can update the fixture's firmware using one of the following methods:

- A Windows PC running the Martin Companion application with a Martin Companion Cable USB/DMX hardware interface connected either to the fixture's DMX IN socket or to the DMX link.
- A Martin P3 System Controller or Windows PC running the Martin P3-PC application, connected to the fixture(s) via network cables. See the P3 System Controller user manual for more information.

Installing using a PC and Martin Companion

The following are required in order to install firmware using a PC:

- A Windows PC running the latest version of the Martin Companion software suite (available for download free of charge from the Martin website at www.martin.com).
- The MAC One Beam firmware file, which the Martin Companion application will download automatically when you run Martin Companion on a PC with an Internet connection.
- The Martin Companion Cable USB-DMX hardware interface, available from your Martin supplier by ordering P/N 91616091.

To install the MAC One Beam firmware using a PC and Martin Companion:

1. Apply power to the MAC One Beam fixture(s) and allow it to boot.
2. Connect the Martin Companion Cable's USB connector to a USB port on your PC. Connect the Martin Companion Cable's XLR connector either directly to the fixture's DMX IN connector or to the DMX link.
3. Start the PC and launch the Martin Companion application. Check that Martin Companion correctly detects the Martin Companion Cable (a green dot should appear next to **USB Connected** in the top right-hand corner of the window).
4. Locate the latest MAC One Beam firmware in Martin Companion's **Firmware** window.

5. Start the firmware update by clicking **Update Firmware** in Martin Companion. Do not disconnect the Martin Companion Cable or power off the fixture(s) until the upload is complete and the fixture(s) has successfully rebooted.
6. If you are updating multiple fixtures over a DMX link, check that they have all rebooted correctly.

Fixture-to-fixture firmware uploads

It is possible to update the firmware in one fixture and then use that fixture to carry out a fixture-to-fixture firmware upload. This method will install the new firmware in all the other fixtures that are powered on and connected to the same DMX / RDM / Art-Net data link. You must use the control panel of the fixture with the new firmware to send the firmware out to the other fixtures on the data link. The other fixtures will automatically recognize that firmware is being sent to them and accept the firmware update. Only MAC One Beam fixtures will accept the new firmware – other types of fixture will ignore it.

To carry out a fixture-to-fixture upload:

1. Apply power to the fixture that has the new firmware, apply power to the fixtures that you want to send the firmware to, and wait for all the fixtures to reset. Disconnect any DMX, Art-Net, sACN or P3 controllers from the data link.
2. In the fixture that has the new firmware, open the SERVICE menu and go to FIXTURE TO FIXTURE FW. Select from UPLOAD VIA DMX512 or UPLOAD VIA ART-NET, depending on the type of data link used, and select START. The firmware will be uploaded to the other fixtures on the data link using RDM protocol.

   Note that fixtures on an Art-Net link must be in the same DMX universe.

   The FORCE command forces all connected fixtures to accept the new firmware, even if they already have that firmware version installed (if fixtures already have a firmware version installed, they will normally ignore uploads of that same firmware version).

   You can select from two firmware transfer speeds: HIGH SPEED and HIGH STABILITY. If you encounter problems that may be caused by interference, imperfect data connectivity, external noise, etc. while you are trying to upload firmware, select HIGH STABILITY. This sends each data packet twice and may resolve stability issues.
3. When the firmware upload is complete, the fixtures that have received firmware will reboot on the new firmware.

Compliance and specifications

See the Safety and Installation Manual attached to this user manual for details of this product's compliance with national and international standards, FCC rules etc. See the Martin website at www.martin.com for technical specifications for this product.

Martin®

www.martin.com

MAC One Beam

Safety and Installation Manual

Martin®

Dimensions

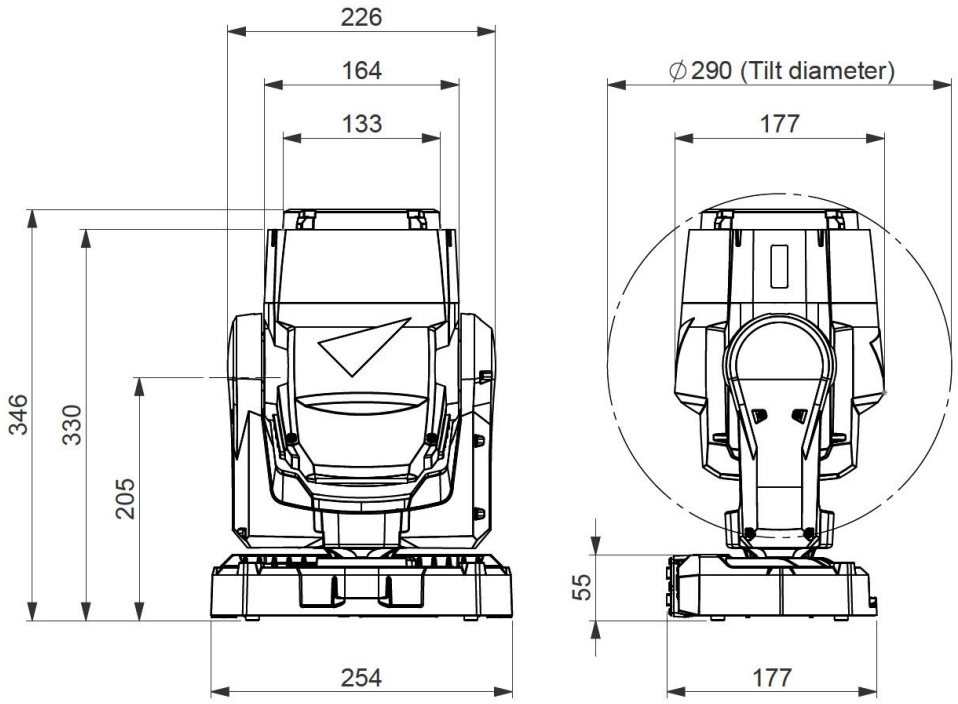

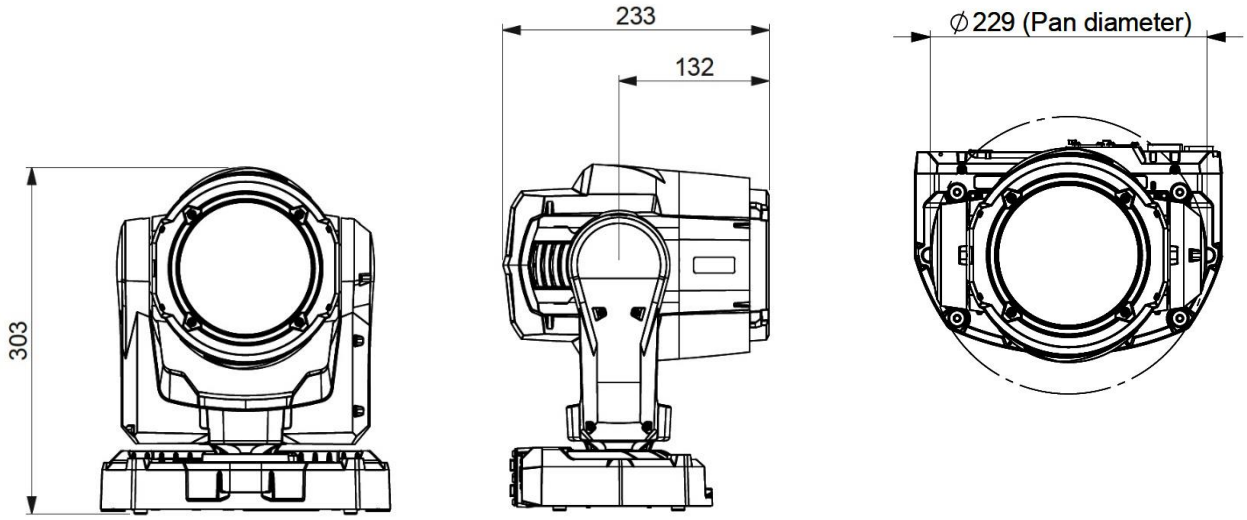

All dimensions are in millimeters

©2026 HARMAN PROFESSIONAL DENMARK ApS. All rights reserved. Features, specifications and appearance are subject to change without notice. HARMAN PROFESSIONAL DENMARK ApS and all affiliated companies disclaim liability for any injury, damage, direct or indirect loss, consequential or economic loss or any other loss occasioned by the use of, inability to use or reliance on the information contained in this document. Martin is a registered trademark of HARMAN PROFESSIONAL DENMARK ApS registered in the United States and/or other countries.

HARMAN PROFESSIONAL DENMARK ApS, Olof Palmes Allé 44, 8200 Aarhus N, Denmark
HARMAN PROFESSIONAL, INC., 8500 Balboa Blvd., Northridge CA 91325, USA

www.martin.com

MAC One Beam Safety and Installation Manual Revision E

Table of contents

Dimensions 2
Safety information 4
Introduction 10
- Before using the product for the first time 10
- Applying mains power 10
- Packing and unpacking 10

Fixture overview 11
Physical installation 12
- Dimming Zones and protection from eye injury 12
- Installation location 15
- Installation hardware from Martin 15
- Avoiding damage from other light sources 15
- Standing the fixture on a flat surface 15
- Mounting on a truss in free-hanging mode 15
- Mounting directly on a truss with two rigging clamps 16
- Securing with a safety cable 17

AC mains power 18
- Linking fixtures to power in a chain 18
- Connecting to power 19

Data connections 19
Safety and information labels 20
Maintenance 21
- Cleaning 21
- Service and repairs 21
- Specifications 22
- Compliance 22
- Disposing of the product 23

Safety information

WARNING!

Read the safety precautions in this manual before installing, powering, operating or servicing this product.

The following symbols are used to identify important safety information on the product and in this manual:

Warning!	**Warning!**	**Warning!**	**Warning!**	**Warning!**	**Warning!**	**Warning!**
Safety hazard. Risk of severe injury or death.	***Hazardous voltage. Risk of lethal or severe electric shock.***	***Fire hazard.***	***Burn hazard. Hot surface. Do not touch.***	***Optical radiation. Eye exposure to the beam must be restricted.***	***Intense light emission.***	***See user documentation.***

Warning! This fixture corresponds to Application Group BLH-C according to EN IEC 62471-7: 2023 for stage lighting. It is a Risk Group 3 product according to EN 62471-5: 2015 and Risk Group 2 product according to IEC/TR 62778 (see “Protection from eye injury” on page 9 for full details). It is a Laser Class 1 product according to EN 60825-1:2014+A11:2021 and IEC 60825-1 Ed.3 (2014).

Possibly hazardous radiation emitted from this product. May be harmful to the eyes. Do not stare directly into the light output from the product. Make sure that the minimum distance and precautions given under “Protection from eye injury” on page 9 are respected.

Use of controls or adjustments or performance of procedures other than those specified in this Safety and Installation Manual or the fixture’s User Manual may result in hazardous radiation exposure.

This fixture must be configured with Dimming Zones as described in this manual so that light output cannot be directed towards people at a distance of less than 5 m (16.5 ft.).

Do not view the light output with optical instruments or any device that may concentrate the beam.

This lighting fixture presents risks of severe injury or death due to fire and burn hazards, electric shock and falls if the safety precautions in this manual are not followed.

Only qualified technicians are permitted to open the fixture. Class 3R laser radiation is possible when the fixture is open – avoid direct eye exposure.

Users may carry out external cleaning as described in this manual, following the warnings and instructions provided, but any service operation not described in this manual or in the fixture’s User Manual must be referred to an authorized Martin service technician.

Not for household use

Read this manual before installing, powering, operating or servicing the fixture. Follow the safety precautions and observe all warnings in this Safety and Installation Manual, in the fixture’s User Manual, and printed on the fixture.

This fixture is for professional use as a stage light only. It is not for consumer, household or general lighting applications. Respect all locally applicable laws, codes and regulations when installing, powering, operating or servicing the fixture.

The light source contained in this fixture must be replaced by Martin® Service or an authorized Martin Service partner only.

Install, operate and service Martin products only as directed in their user documentation, or you may create a safety hazard or cause damage that is not covered by product warranties.

The latest versions of this Safety and Installation Manual and the fixture's User Manual are available for download from the MAC One Beam area of the Martin website at www.martin.com. Before you install, operate or service the fixture, check the Martin website and make sure that you have the latest user documentation for the fixture. Document revisions are indicated at the bottom of page 2.

FDA variance requirement (U.S. only)

This product is supplied pursuant to Harman Professional's FDA-approved laser product report and variance No. FDA-2026-V-5644. Operation of this product in the United States requires the owner or operator to obtain and maintain a valid FDA laser light show variance and to comply with all applicable variance conditions prior to and during use. The purchaser, owner or operator is responsible for ensuring compliance with all applicable FDA variance conditions before and during operation. This manual provides product-specific safety information. Compliance with the conditions of the owner's FDA laser light show variance remains the responsibility of the variance holder.

Technical support

If you have questions about how to install or operate the fixture safely, please contact Harman Professional Technical Support:

- For technical support in North America, please contact
  HProTechSupportUSA@harman.com
  Phone: (844) 776-4899
- For technical support outside North America, please contact your national distributor.

Protection from electric shock

The fixture has an ingress protection rating of IP20 and is for use in dry locations only. Do not expose it to rain or moisture.

The fixture accepts AC mains power at 100-240 V~ (nominal), 50/60 Hz. Do not connect the fixture to mains power that is not within this range.

The fixture has a maximum total power consumption of 55 W.

The fixture draws a maximum total current of 0.8 A at 100-120 V~ and a maximum total current of 0.4 A at 200-240 V~.

The fixture draws a typical half-cycle RMS inrush current of 3.2 A for the first 10 milliseconds when mains power is first applied to the fixture at 230 V~, 50 Hz.

The voltage and frequency at the power throughput socket are the same as that applied at the power input socket.

Do not connect devices to power in a chain that will exceed the electrical ratings of any cable or connector used in the chain.

Do not connect more than twenty-four (24) MAC One Beam fixtures in total to each other in an interconnected chain when supplying the fixture with mains power from 100 V to 120 V and from 200 V to 240 V.

To connect the fixture to mains power, you must first obtain 12 AWG or 2.5 mm^2 power input cable that is 16 A rated and heat-resistant to 90° C (194° F) minimum. In the USA and Canada, the cable must be UL-listed, type SJT or equivalent. In the EU, the cables must be type H05VV-F or equivalent. Suitable cables with the correct connectors are available from Martin.

Ensure that the fixture is electrically connected to ground (earth) via the power input cable. Do not remove the protective coating on the housing or loosen screws to establish a separate ground (earth) connection from the fixture's chassis.

Use only a source of mains power that complies with local building and electrical codes and has both overload and ground-fault (earth-fault) protection.

Disconnect the fixture from AC mains power before carrying out any installation, cleaning or maintenance work and when the fixture is not in use.

Isolate the fixture from power immediately if the power plug or any seal, cover, cable, or other component is damaged, defective, deformed, showing signs of water ingress or showing signs of overheating. Do not reapply power until repairs have been completed.

Before using the fixture, check that all power distribution equipment and cables are in perfect condition and rated for the electrical requirements of all connected devices.

Do not connect a device to power if its maximum current draw will exceed the electrical ratings of any cable or connector used in the chain.

Support the weight of cable runs. Do not allow a length of cable to hang from a connector.

Do not remove any cover from the fixture.

The DMX and Ethernet transceivers of the fixture are isolated/SELV to prevent ground loops and for safety reasons.

Do not use this equipment at an altitude of more than 2000 m (6570 ft.) above sea level.

Protection from burns and fire

Do not operate the fixture if the ambient temperature (T_a) exceeds 40° C (104° F). At this temperature, a thermal protection system shuts the fixture down automatically.

The surface of the fixture can reach up to 65° C (149° F) during operation. Avoid contact by persons and materials. Allow the fixture to cool for at least 15 minutes before handling.

Keep flammable materials well away from the fixture. Keep all combustible materials (e.g. fabric, wood, paper) at least 0.2 m (8 in.) away from the fixture.

Do not use the fixture to illuminate any surface that is closer than 1.75 m (5.8 ft) from the front of the head.

Ensure that there is free and unobstructed airflow around the fixture. Provide a minimum clearance of 0.2 m (8 in.) around fans and air vents.

Do not stick filters, masks or other materials onto any optical component unless they are supplied by Martin for use with the fixture.

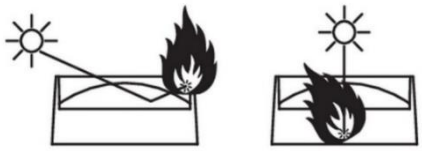

See drawing on right. The fixture's lenses can focus the sun's rays inside the fixture, creating a risk of fire and damage. Do not expose the front of the fixture to sunlight or any other source of powerful light from any angle, even for a few seconds. Make sure that the head will be pointing away from the sun and from any other potential source of powerful light at all times, even when the fixture is not in use.

Protection from eye injury

This fixture corresponds to Application Group BLH-C according to EN IEC 62471-7:2023 for stage lighting, Risk Group 3 according to EN 62471-5:2015 when all photobiological risks are considered and Risk Group 2 according to IEC/TR 62778 for blue light only. Application Group BLH-C defines a time class (short time) <0.25 sec. that shall be respected within the declared RG2 distance in the case of intentional effect lighting or unintentional view into a stage luminaire.

The fixture is a Laser Class 1 product according to EN/IEC 60825-1:2014+A11:2021 and IEC 60825-1 Ed.3 (2014). It emits possibly hazardous optical radiation. It falls into the Risk Group categories shown in the following diagram according to EN 62471 series and IEC/TR 62778 under worst-case conditions:

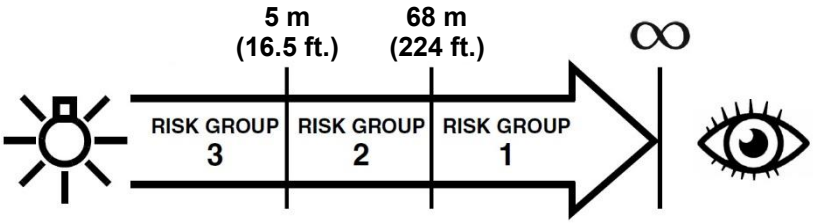

Do not stare at operating light source

Do not look into the light output from less than 5 m (16.5 ft.). At a distance of less than 5 m (16.5 ft.) from the fixture, the light output can potentially cause eye or skin injury before an exposed person's natural aversion responses (blink reflex and reaction to skin discomfort) can protect them. At distances greater than 5 m (16.5 ft.), potential eye and skin injury hazards from the light output are normally prevented by natural aversion reflexes.

Position the fixture so that prolonged staring into the light output at less than 68 m (224 ft.) is not expected.

Fixture parameters:

- HD (Hazard Distance): 5.0 m (16.5 ft.)

Embedded laser parameters:

- Pulse duration: Continuous (modulated)
- Wavelength: 449-469 nm

The fixture must be placed in a fixed position and configured with Dimming Zones as described in this manual and the fixture's User Manual so that people cannot be exposed to the fixture's full-intensity light output at a distance of less than 5 m (16.5 ft.) from the fixture. Configuring the fixture's Dimming Zones involves creating zones that the fixture can only project reduced-intensity light into. A Dimming Zone must be created – following the instructions given in the 'Physical installation' chapter of this manual – for every area where people can be present.

Programming of Dimming Zones must be performed by trained personnel only. No other persons are permitted within the 5 m (16.5 ft.) Hazard Distance while Dimming Zones are being configured. During programming, personnel will necessarily be located within the 5 m (16.5 ft.) Hazard Distance. The operator must position themselves outside the direct beam path at all times and must not look into the light output. The fixture must be aimed so that the emitted beam cannot directly strike the operator or any other person during programming.

Do not use the fixture unless and until Dimming Zones have been configured so that there is no risk of eye exposure to full-intensity light output.

When Dimming Zones are enabled and people can be closer than 5 m (16.5 ft.) to the fixture, Offline Mode must be set to BLACKOUT using the control panel menus, the DMX Control/Settings channel, RDM or P3 to protect from accidental exposure to hazardous light output if the control signal is lost.

Once the fixture is installed and configured, it must be fixed in position so that it is impossible to move it: moving or relocating the fixture will affect the configured Dimming Zones and may expose people to a risk of eye injury.

All the fixture's Dimming Zones must be erased before removing the fixture from an installation.

Do not look directly into the fixture's light output.

Do not look at the light output with magnifiers, telescopes, binoculars or similar optical instruments that may concentrate the light output.

Ensure that people are not looking directly into the front of the fixture from less than 5 m (16.5 ft.) when the product lights up suddenly. This can happen when power is applied, when the product receives a control signal, or when certain control menu items are selected.

An easily accessible means of remotely shutting down power to the fixture must be provided so that the operator can quickly shut down light output from the fixture in all circumstances, including during stand-alone operation.

Disconnect the fixture from power at all times when the fixture is not in use.

Provide well-lit conditions to reduce the pupil diameter of anyone working on or near the fixture.

The labels shown in the section ‘Safety and information labels’ on page 20 are fixed to the product. If they are damaged or removed, you must replace them. Contact Martin Global Service for replacement labels.

Protection from injury

The fixture weighs 4.95 kg (10.92 lb.) not including rigging hardware.

When the fixture is in use, it must be either:

- fastened to a secure, stable structure such as a rigging truss, or
- fastened immovably to a stable horizontal surface where it will not present a danger of tripping or falling.

Install the fixture only as directed in this manual.

The fixture is not portable when in use.

Ensure that any supporting structure and/or hardware used can hold at least six (6) times the weight of all the devices they support.

Make sure that all supporting structures and rigging hardware items (including safety cables and fasteners) are in perfect condition, safely dimensioned, suitable for the installation environment and will be stable under all weather and temperature conditions.

Check that all rigging hardware (safety cables, clamps, trusses etc.) conforms with national and local regulations.

If suspending from a rigging structure, fasten the fixture to a truss or similar support using a rigging clamp fastened to an omega bracket or using two rigging clamps bolted directly into the M12 holes in the base of the fixture. Do not use a safety cable as the primary means of support.

If the fixture is installed in a location where it may cause injury or damage if it falls, install as directed in this manual a secondary attachment such as a safety cable that will hold the fixture if a primary attachment fails. The secondary attachment must be approved by an official body such as TÜV as a safety attachment for the weight that it secures, must comply with DGUV 17 (BGV C1) or EN 60598-2-17 Section 17.6.6 and must be capable of bearing a static suspended load that is six (6) times the weight of the fixture and all installed accessories.

If the safety cable attachment point becomes deformed, do not suspend the fixture. Have the fixture repaired by an authorized Martin service partner.

Allow enough clearance around the head to ensure that it cannot collide with an object or another fixture when it moves.

Check that all external covers and rigging hardware are securely fastened.

Block access below the work area and work from a stable platform whenever installing, servicing or moving the fixture. Make sure that there is no risk of injury from falling parts, tools or other materials.

Do not operate the fixture with missing or damaged covers, shields or any optical component.

Do not lift or carry the fixture by its head. Support the fixture by its base only.

In the event of an operating problem, stop using the fixture immediately and disconnect it from power. Do not attempt to use a fixture that is obviously damaged.

Do not modify the fixture in any way not described in this manual or install other than genuine Martin parts.

Refer any service operation that is not described in this manual or in the fixture's User Manual available for download from www.martin.com to Martin Service or to an authorized Martin service partner.

Introduction

Thank you for selecting the MAC One Beam moving head lighting fixture from Martin®.

This Safety and Installation Manual is supplied with the fixture. It gives details of installing and servicing the fixture as well as connecting to mains power. The MAC One Beam User Manual, containing full instructions for connecting to control data, setting up, controlling and monitoring the fixture is available for download from the MAC One Beam area of the Martin website at www.martin.com. If you have any difficulty locating this document, please contact your Martin supplier for assistance.

Before installing, operating or servicing the MAC One Beam, please check the fixture's area of the Martin website at www.martin.com and make sure that you have the latest user documentation for the product.

Not all product specifications are included in the fixture's user documentation. You can find full specifications for the fixture in the MAC One Beam area of the Martin website. The online specifications include information to help you order accessories such as cables, flightcases etc.

The fixture is supplied with this Safety and Installation manual and a Martin omega bracket for fastening a rigging clamp to the fixture base.

Before using the product for the first time

1. Check the support pages on the Martin Professional website at www.martin.com for the most recent user documentation and technical specifications for the fixture. Martin user manual revisions are identified by the revision letter at the bottom of the inside cover.
2. Read 'Safety information' on page 3 before installing, operating or servicing the fixture.
3. Unpack and ensure that there is no transportation damage before using the fixture. Do not attempt to operate a damaged fixture.
4. Check that the voltage and frequency of the local power source match the mains power requirements of the fixture.
5. Either hard-wire the fixture's power input cable to an AC mains power source or install as described in this manual a power plug (cord cap) that is suitable for local power outlets on the power input cable and connect the cable to an AC mains power outlet. If you need to fabricate a power cable, use only the cable and connector specified in this manual.

Applying mains power

The fixture does not have an on/off switch. It becomes active as soon as AC mains power is applied at the power input connector. Be prepared for the head to move and for the fixture to suddenly emit bright light.

Each time power is applied to the fixture, it will reset all effects and functions to their home positions. A reset typically takes around 20 seconds.

Packing and unpacking

Allow the fixture to cool for 30 minutes before packing it for storage or transport in a flightcase or packaging.

If you move the fixture from a cold to a warm environment, remove it from its flightcase or packaging and give it at least two hours to acclimatize before you apply power. This will help to avoid damage due to internal condensation.

Fixture overview

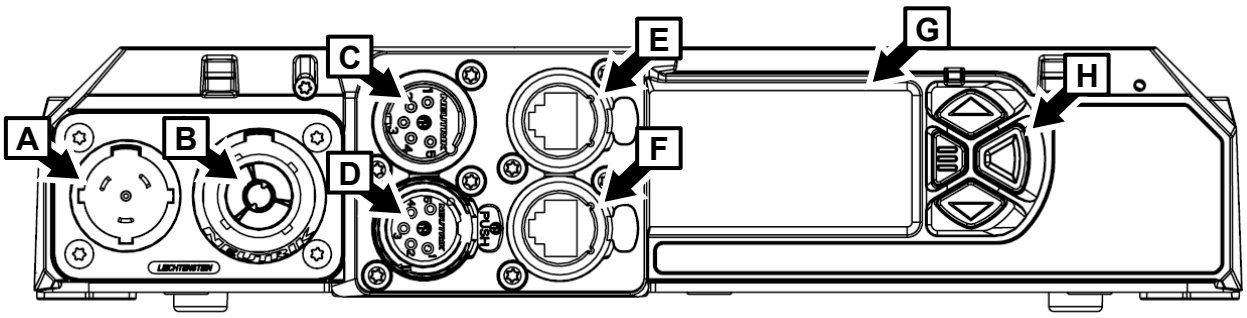

Connections panel, control panel

A – AC mains power input (Neutrik powerCON TRUE1 TOP)

B – AC mains power throughput (Neutrik powerCON TRUE1 TOP)

C – DMX data input (5-pin locking male XLR)

D – DMX data thru / output (5-pin locking female XLR)

E – Art-Net, sACN or P3 Ethernet port A in/out with fail-safe bypass

F – Art-Net, sACN or P3 Ethernet port B in/out with fail-safe bypass

G – Backlit control panel display with battery power

H – Control buttons

Physical installation

Warning! Read ‘Safety information’ on page 4 before installing the fixture.

It is the installer’s responsibility to protect persons in the installation area from eye injury. The fixture must be suitably positioned (locating it in an area with restricted access where necessary) and configured with ‘Dimming Zones’ as described in this chapter so that it is impossible for the fixture to aim full-intensity light output towards people who are less than 5 m (16.5 ft.) from the fixture.

Once the fixture has been installed and configured, it must be impossible to move the fixture (and impossible to move any surface or structure that the fixture is installed on), or the fixture’s Dimming Zones may be moved, creating an eye safety hazard. If the fixture is moved even slightly, it must be reconfigured with new Dimming Zones.

All Dimming Zones must be erased before the fixture is removed from an installation.

Make sure that you do not aim full-intensity light at people who are less than 5 m (16.5 ft.) from the fixture while you are programming Dimming Zones.

To avoid head collisions when installing MAC One Beam fixtures next to each other, allow a minimum center-to-center distance between fixtures of 300 mm (12 inches).

Dimming Zones and protection from eye injury

The MAC One Beam can be programmed with up to eight Dimming Zones that reduce light output (dim the beam) when the light is projected in certain directions in order to prevent full beam intensity from hitting cameras or the eyes of people that are less than 5 m (16.5 ft.) from the fixture.

The Dimming Zones can be programmed:

- using the DIMMING ZONES menu in the control panel in the base of the fixture, or
- via DMX using a dedicated Dimming Zones DMX channel.

Each Dimming Zone is defined by 4 corners. Multiple Dimming Zones can overlap to create more complex shapes. Dimming Zones are real-world coordinates (if you rotate pan 360 degrees, the fixture is aware that it has returned to the same Dimming Zones).

See diagrams below. Dimming Zones must be programmed so that they cover all areas where people (audience, staff, performers etc.) can come within 5 m (16.5 ft.) of the front lens. The Dimming Zones must also include an area in front of and around the fixture beam that is 3 m (10 ft.) vertically from the floor and 2.5 m (8 ft. 3 in.) horizontally from the beam. Access to all areas that are not protected by Dimming Zones must be prevented using barriers.

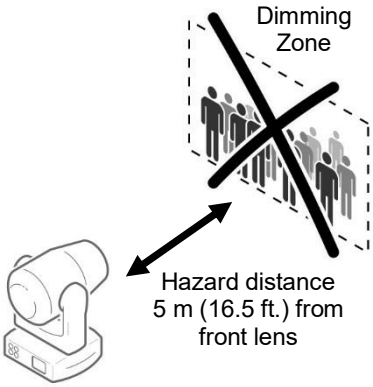

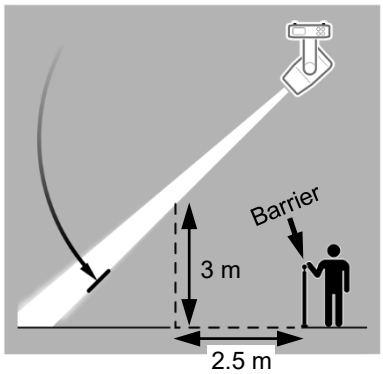

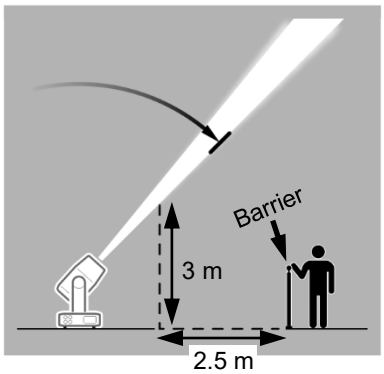

Take reflections from mirrored surfaces, mirror balls and any other reflective stage artifacts or surfaces into account when defining Dimming Zones.

The following rules apply when creating Dimming Zones:

- Zones must always have four corners: A, B, C, D.
- Define the corners in the order A → B → C → D.
- Define triangles by assigning the same position to two corners. The two corners that share the same position must be neighboring letters: AB, BC, CD, or DA.
- Zones are allowed to overlap.

See examples below:

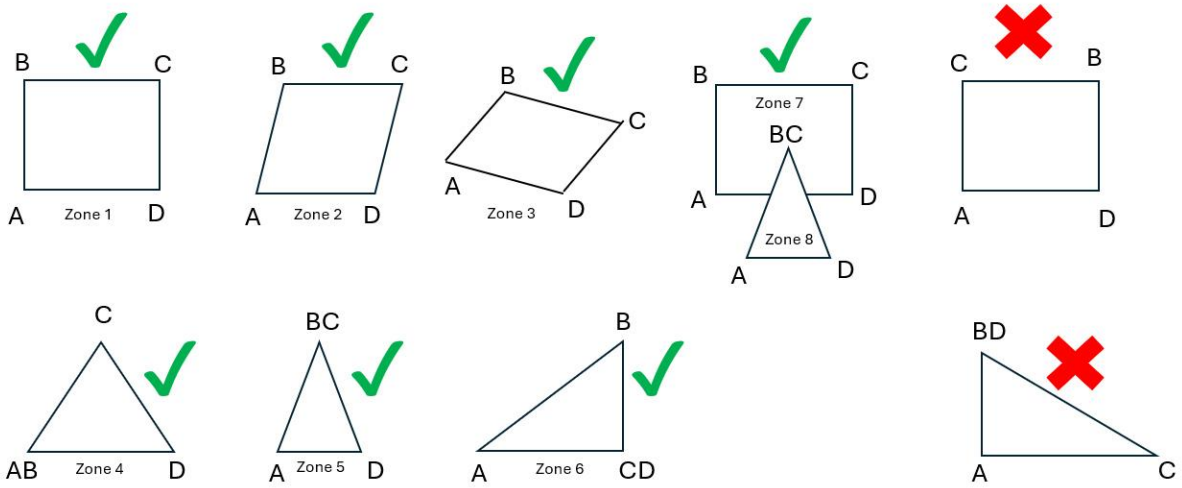

If you create a Dimming Zone shape that is not allowed, as in the two examples on the right above, and try to enable it with a ZONE X → STATE → ON command, the fixture will immediately set STATE back to OFF and flash its main output red briefly to indicate that the dimming zone was not enabled. If you have difficulties enabling a Dimming Zone, check that its four corners are set up correctly.

The fixture has a safety function that reduces light output to Risk Group 2 level until at least one Dimming Zone has been programmed. When the first Dimming Zone has been programmed, light output to all areas outside this first Dimming Zone is unrestricted and can reach full intensity. Make sure that you do not aim full-intensity light at people who are closer than 5 m (16.5 ft.) of the fixture while you are programming Dimming Zones.

Dimming Zones are not automatically reset by cycling power off and on. All the fixture's Dimming Zones must be erased, either using the DIMMING ZONES → GLOBAL → ERASE ALL command in the fixture's onboard control panel or using the *Dimming Zones Control* DMX channel, before the fixture is removed from an installation. If you fail to do this, you may create a risk of eye injury when the fixture is moved to a new location and power is applied to it.

Whenever an installation is moved or modified, the Dimming Zone(s) of each fixture must be rechecked. All rented or loaned MAC One Beam fixtures must have their configured Dimming Zones erased as soon as they are returned to their owner or rental house. Returning the fixture to its factory defaults with a DEFAULT SETTINGS → FACTORY DEFAULTS → LOAD command in the control menu or via RDM erases programmed Dimming Zones together with other custom settings. We strongly recommend that you log the Dimming Zone erasure / reset procedure and keep a record together with fixtures to make sure that fixtures are <u>always</u> fully reset and Dimming Zones erased before they are re-used in a different installation.

Before the fixture is used, you must block off access by people to the area closer than 5 m (16.5 ft.) to the fixture and then you must check that the fixture's Dimming Zones have been correctly configured using PERSONALITY → DIMMING ZONES → ZONE 1 → SHOW, followed by ZONE 2 → SHOW, ZONE 3 → SHOW etc. Make certain that the Dimming Zones cover <u>all</u> areas where people may be present.

if Dimming Zones are enabled and if people can be closer than 5 m (16.5 ft.) to the fixture during operation, the fixture's Offline Mode must be set to BLACKOUT using the control panel menus, the DMX Control/Settings channel, RDM or P3 before the fixture is used. This will protect from possible eye injury if the control signal is lost.

Each time the fixture is power cycled when it is programmed with at least one Dimming Zone, it will carry out a soft start of minimum 1 second duration when it first lights up.

If pan and/or tilt is continually obstructed, or if the head is physically forced into a dimming zone while the overall fixture position is maintained, light output will immediately be reduced to a safe level.

Programming Dimming Zones

This section describes the procedure for programming Dimming Zones using the fixture's onboard control panel. It is also possible to program Dimming Zones via DMX – the MAC One Beam User Manual available for download from www.martin.com contains details. Additional functionality such as fine-tuning/updating Dimming Zones is also available via DMX.

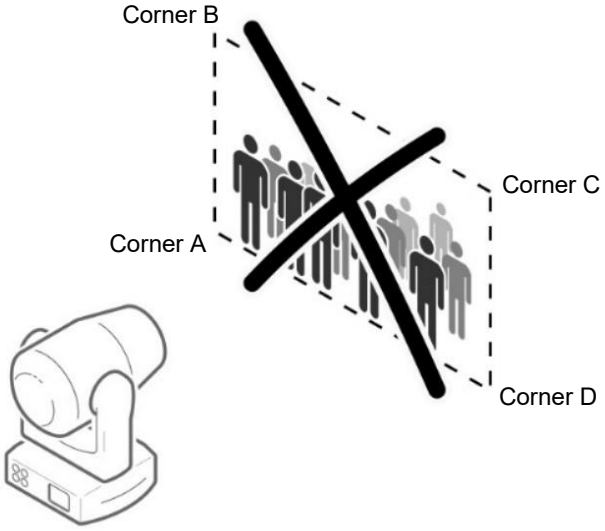

Example of Dimming Zone corners

To program a Dimming Zone using the fixture's control panel, see the example in the drawing above (note that a Dimming Zone does not have to be a rectangle, it can be any shape with four corners):

1. Open the dimmer, if it is not already open.
2. In the control panel, go to PERSONALITY → DIMMING ZONES → ZONE 1 → CORNER A. Use the arrow keys to move the fixture's pan and tilt until the beam is aimed at the first corner of the Dimming Zone that you want to define. Press the MENU button to save this choice and exit the CORNER A menu.
3. Repeat this process for CORNER B, CORNER C and CORNER D.
4. Go to PERSONALITY → DIMMING ZONES → ZONE 1 → STATE. Press the MENU button to save the ON setting and return to the ZONE 1 menu. .
5. You can program up to a total of eight Dimming Zones by repeating the above procedure for ZONE 2, ZONE 3 etc.
6. You can check each Dimming Zone by going to PERSONALITY → DIMMING ZONES → ZONE 1 … 8 → SHOW. The fixture will move its beam to each stored corner of the Dimming Zone and hold there for one second before moving to the next corner.

Enabling and disabling Dimming Zones

If you disable Dimming Zones, the fixture ignores any programmed zones and goes to its reduced output state.

To enable and disable the programmed Dimming Zones, go to PERSONALITY → DIMMING ZONES → ENABLE / DISABLE ALL.

Disabling Dimming Zones does not erase them. Bear in mind that programmed Dimming Zones only provide protection when the fixture is in its original location – moving a fixture and then re-enabling its

original programmed Dimming Zones may create a risk of eye injury. If you move a fixture, you must re-program its Dimming Zones.

Erasing Dimming Zones

To erase all programmed Dimming Zones, go to PERSONALITY → DIMMING ZONES → ERASE ALL. When the fixture asks if you are sure, select YES.

Returning the fixture to its factory default settings with a FACTORY SETTINGS → DEFAULT → LOAD command also erases all programmed Dimming Zones.

Fixture setup parameters and Dimming Zones

Changing pan and tilt calibration settings moves all the programmed Dimming Zones. If you adjust pan and tilt calibration, check that Dimming Zones still cover all areas where light output can be directed at people or cameras that are closer than 5 m (16.5 ft.) to the fixture.

Inverting pan and tilt (using the PERSONALITY menu in the control panel, using the DMX Control/Settings channel etc.) does not affect Dimming Zones.

Particular Dimming Zone precautions

Make sure that you handle the following situations with particular care:

- Full-intensity light can be projected unexpectedly while Dimming Zones are being programmed. Do not look into the fixture's light output – and keep people minimum 5 m (16.5 ft.) away from the fixture – until you have finished programming and checking Dimming Zones.
- When the TEST and SERVICE menus in the control panel are active, all Dimming Zones are disabled and full-intensity light output is possible in all directions. Do not look into the fixture's light output – and keep people minimum 5 m (16.5 ft.) away from the fixture – while you are working in these menus.

Installation location

Fasten the fixture to a secure structure or surface. If you install the fixture in a location where it may cause injury or damage if it falls, secure it as directed in this manual using a securely anchored safety cable that will hold the fixture if the primary fastening method fails.

Installation hardware from Martin

Martin can supply installation hardware such as rigging clamps and safety cables that are suitable for use with the fixture (see the product specifications on the MAC One Beam product page on the Martin website at www.martin.com).

Avoiding damage from other light sources

Do not point the light output from other lighting fixtures at the MAC One Beam, as powerful light can damage the fixture's optics and control panel display.

Standing the fixture on a flat surface

The fixture can be fixed to a hard, flat, secure horizontal surface provided that there is no risk that it may cause an obstruction or be knocked over. It must be impossible to move the fixture once it is installed, or the fixture's Dimming Zones may be affected and the fixture may project full-intensity light at persons from less than the 5 m (16.5 ft.) minimum safe distance.

Ensure that the surface can safely bear the weight of all items that it will support.

If you install the fixture in a location where it may cause injury or damage if it falls, secure it as directed in this chapter with a securely anchored safety cable.

Mounting on a truss in free-hanging mode

The fixture can be clamped to a truss or similar rigging structure using the supplied omega bracket and a rigging clamp that is approved for the weight that it will support, on condition that the fixture is installed hanging freely downwards only.

To clamp the fixture to a truss:

1. Check that the rigging structure can support at least six times (or more if required by local regulations) the weight of all fixtures and equipment to be installed on it.
2. Block access under the work area.
3. The fixture is supplied with a Martin omega bracket. Bolt a rigging clamp that is in perfect condition and approved for the weight that it will support securely to the omega bracket. Use an M12 grade 8.8 steel minimum bolt with a self-locking nut.
4. Fasten the omega bracket to the base of the fixture by locking the bracket's quarter-turn fasteners into the receptacles (**A** in illustration on next page) in the base of the fixture. Turn quarter-turn fasteners a full 90° to lock them as shown on right.

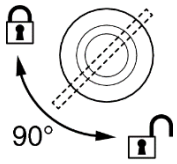

5. Note the position of the arrow marked **FRONT** (see illustration below). Working from a stable platform, hang the fixture on the truss and fasten the rigging clamp onto the truss with FRONT pointing towards the main area to be illuminated.

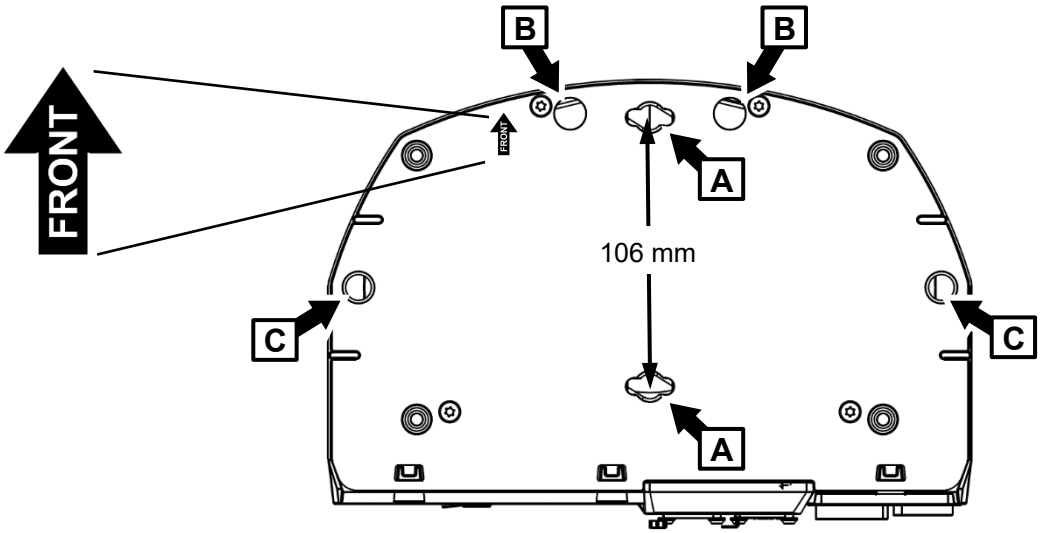

MAC One Beam fixture base

6. Secure the fixture with a safety cable as directed on next page.
7. Check that the fixture is held securely and cannot move – any movement may affect the fixture's Dimming Zones and create a risk of eye injury.
8. Check that the head will not collide with other fixtures or objects.

Mounting directly on a truss with two rigging clamps

The fixture can be clamped to a truss or similar rigging structure in any orientation using two half-coupler type rigging clamps (see illustration on right) bolted directly to the fixture base.

Half-coupler clamp

To clamp the fixture to a truss directly with half-coupler clamps:

1. Check that the rigging structure can support at least six times (or more if required by local regulations) the weight of all fixtures and equipment to be installed on it.
2. Block access under the work area.

3. Bolt two half-coupler clamps securely to the base of the fixture by passing an M12 grade 8.8 steel minimum bolt through each clamp and fastening the bolts into the threaded holes **C** in the illustration above. Bolts must protrude minimum 24 mm and maximum 40 mm into the base of the fixture (see illustration on right). Apply a small quantity of Loctite 243 to the threads of the bolts before fastening them into the base. The clamps must be in perfect condition and approved for the weight that they will support. Do not use one single clamp, or you will damage the fixture base and create a safety hazard.

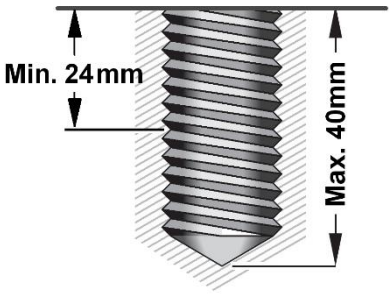

4. Note the position of the arrow marked **FRONT** (see illustration on previous page). Working from a stable platform, fasten the two half-coupler clamps securely to a rigging truss or similar with FRONT pointing towards the main area to be illuminated.
5. Check that the fixture is held securely and cannot move – any movement may affect the fixture's Dimming Zones and create a risk of eye injury.
6. Secure the fixture with a safety cable as directed in the next section.

Securing with a safety cable

1. Obtain a safety cable that is approved for the weight of the fixture.
2. Fasten the cable to one of the safety cable attachment points in the base of the fixture (see **B** in illustration on previous page) by either looping it through or fastening a carabiner clip to the attachment point **B**.
3. Remove as much slack as possible from the safety cable (by looping the cable around the truss chord, for example) and fasten it to a secure anchoring point.
4. Make sure that the safety cable will hold the fixture if a primary attachment fails.
5. Make sure that there is no possibility of the head colliding with other fixtures or objects when it moves through its full pan and tilt ranges,

AC mains power

Warning! Read ‘Safety information’ on page 4 before connecting the fixture to AC mains power.

The fixture has an auto-ranging power supply that accepts AC mains power at 100-240 V at 50/60 Hz. Do not apply AC mains power at any other voltage or frequency to the fixture.

Provide an easily accessible means of shutting down power to the fixture remotely so that the operator can quickly shut down the fixture if necessary for safety reasons.

The fixture’s maximum current draw is as follows:

- at 100-120 V~: 0.8 A
- at 200-240 V~: 0.4 A.

Typical half-cycle RMS inrush current: 3.2 A at 230 V, 50 Hz.

Typical earth-leakage current: 0.5 mA.

The fixture requires a power input cable with a Neutrik powerCON TRUE1 NAC3FX-W (TOP) female cable connector for AC mains power input. The cable must meet the requirements listed under “Protection from electric shock” on page 5. Martin can supply suitable input cables 1.5 m (4.9 ft.) long with input connectors at one end and bare ends at the other, as well as standard power link cable and loose input/output connectors. (see the Martin website at www.martin.com).

The fixture can be hard-wired to a building electrical installation if you want to install it permanently. Alternatively, you can connect it to local power outlets if you install a suitable power plug on the power input cable. When installing a power plug, follow the plug manufacturer’s instructions and connect the wires in the power cable following the color coding guide in the table below:

	Live or L	**Neutral or N**	**Earth, Ground or ⏚**
US system	Black	White	Green
EU system	Brown	Blue	Yellow/green

If you need to install a Neutrik powerCON TRUE1 (TOP) connector on a power cable, follow the connector manufacturer’s instructions (normally published on the manufacturer’s website or included with the product), respecting the color coding guide above.

Linking fixtures to power in a chain

If you obtain a 12 AWG / 2.5 mm^2 power input cable and 12 AWG / 2.5 mm^2 power relay cables from Martin, you can relay mains power from one fixture to another by connecting fixtures to power in a linked daisy-chain, MAINS OUT throughput socket to MAINS IN input socket. If you create a linked daisy-chain like this, respect the following limits:

- Do not connect more than seven (7) MAC One Beam fixtures in total to each other in an interconnected chain, regardless of mains power voltage, when supplying the fixture with mains power via an RCD with a 10 mA earth (ground) leakage rating.
- Do not connect more than twenty (20) MAC One Beam fixtures in total to each other in an interconnected chain, regardless of mains power voltage, when supplying the fixture with mains power via an RCD with a 30 mA earth (ground) leakage rating.

If you connect multiple fixtures to power in a daisy-chain, we recommend that you draw power from a circuit that is protected by a type D MCB (Miniature Circuit Breaker). This will avoid the breaker tripping unnecessarily due to inrush current.

Connecting to power

Connect the fixture to AC mains power by lining up the keys in the power input cable connector with the keyways in the power input connector in the connections panel, inserting the connector and twisting clockwise. Twist the cable connector counterclockwise and remove it from the connections panel to disconnect.

The fixture does not have an on/off switch. It becomes active as soon as power is applied at the power input connector. Be prepared for the head to move suddenly and for the fixture to emit bright light as soon as power is applied.

Data connections

See the MAC One Beam User Manual available for download from www.martin.com for full details of connecting the fixture to control data.

Use data cable that meets the following specifications:

- DMX cable must be shielded, twisted-pair, high-quality dedicated DMX cable only. Microphone cable is not suitable.
- Ethernet cable must be shielded, twisted-pair, type S/UTP, SF/UTP, S/STP or SF/STP only. The cable must be rated Cat 5e or better. The cable shield must be electrically connected to connector housings, and the other devices on the data link must also support shielded connections.

Safety and information labels

The following labels are fixed to the MAC One Beam and must be reproduced if they become damaged, illegible or are missing. Contact Martin Global Service for replacement labels.

Laser safety warnings

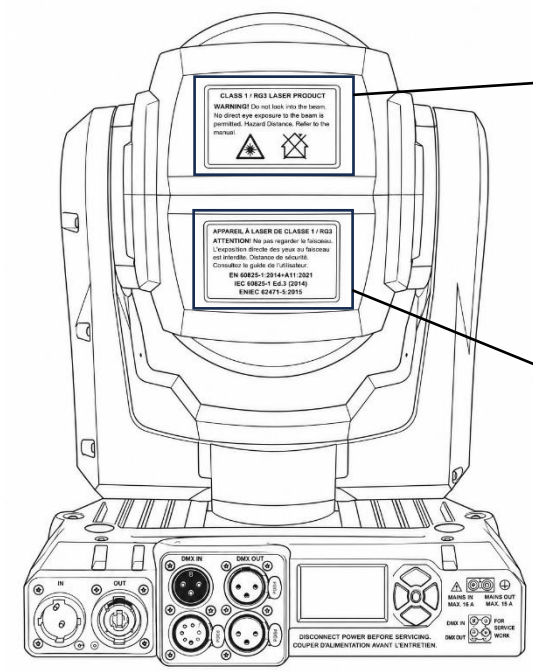

CLASS 1 / RG3 LASER PRODUCT

WARNING! Do not look into the beam. No direct eye exposure to the beam is permitted. Hazard Distance: Refer to the manual.

APPAREIL À LASER DE CLASSE 1/RG3

ATTENTION! Ne pas regarder le faisceau. L'exposition directe des yeux au faisceau est interdite. Distance de sécurite: Consultez le guide de l'utilisateur.

EN 60825-1:2014+A11:2021
IEC 60825-1 Ed.3 (2014)
IEC/EN 62471-5:2015

These two labels must be reproduced with a yellow background, 58 x 33 mm (2.3 x 1.3 inches) in size.

Printed on base of fixture

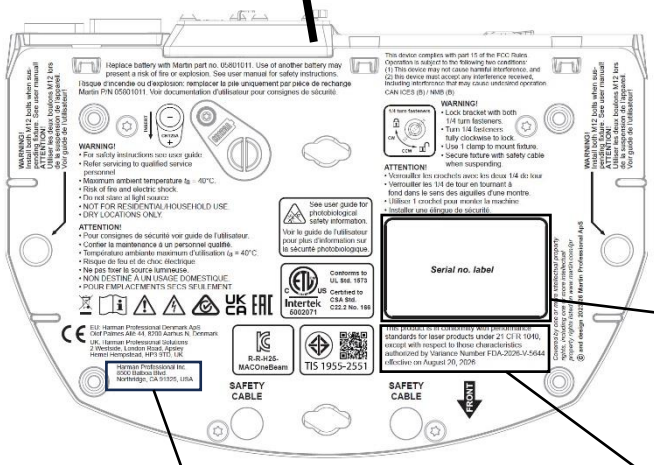

Serial number label with factory location and date of manufacture

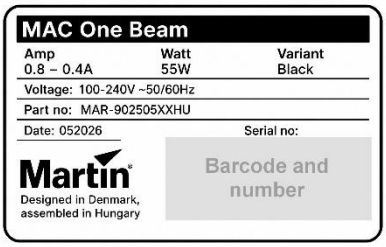

Manufacturer's address

Harman Professional Inc.
8500 Balboa Blvd.
Northridge, CA 91325, USA

FDA conformity and applicant information

This product is in conformity with performance standards for laser products under 21 CFR 1040, except with respect to those characteristics authorized by Variance Number FDA-2026-V-5644 effective on August 20, 2026.

Maintenance

Warning! Read 'Safety information' on page 4 before servicing the fixture.

Cleaning

Excessive dust, smoke fluid, and particle buildup degrades performance, causes overheating and will damage the fixture. Damage caused by inadequate cleaning or maintenance is not covered by the product warranty.

The cleaning of external optical lenses must be carried out periodically to optimize light output. Cleaning schedules for lighting fixtures vary greatly depending on the operating environment. It is therefore impossible to specify precise cleaning intervals for the fixture. Environmental factors that may result in a need for frequent cleaning include:

- Use of smoke or fog machines.
- High airflow rates (near air conditioning vents, for example).
- Presence of cigarette smoke.
- Airborne dust (from stage effects, building structures and fittings or the natural environment at outdoor events, for example).

If one or more of these factors is present, inspect fixtures within their first 100 hours of operation to see whether cleaning is necessary. Check again at frequent intervals. This procedure will allow you to assess cleaning requirements in your particular situation. If in doubt, consult your Martin dealer about a suitable maintenance schedule.

Use gentle pressure only when cleaning, and work in a clean, well-lit area. Do not use any product that contains solvents or abrasives, as these can cause surface damage. The front lens is a polymer material: do not use cleaning products that can damage plastic or polymers.

To clean the fixture:

1. Disconnect the fixture from power and allow it to cool for at least 15 minutes.
2. Vacuum or gently blow away dust and loose particles from the outside of the fixture and the air vents at the back and sides of the head with low-pressure compressed air. Holding cooling fan blades stationary with a screwdriver will protect them from spinning too fast and possibly being damaged when you apply a vacuum or air jet.
3. Clean surfaces by wiping gently with a soft, clean lint-free cloth moistened with a weak detergent solution. Do not rub glass surfaces hard: lift particles off with a soft repeated press. Dry with a soft, clean, lint-free cloth or low-pressure compressed air. Remove stuck particles with an unscented tissue or cotton swab moistened with glass cleaner or distilled water.

Battery replacement

Warning! The fixture's lithium battery is not rechargeable. Do not try to recharge it.

The lithium battery is user-replaceable. See drawing on right. The battery can be accessed after loosening the screw (arrowed) in the battery cover on the base of the fixture. You can order a replacement battery from Martin, requesting P/N 05801011.

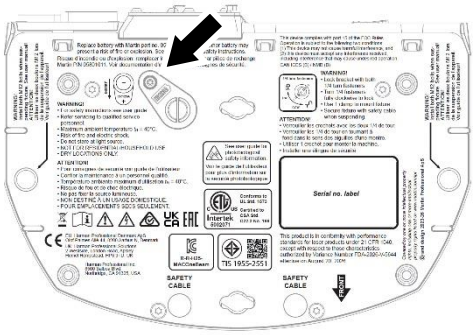

Service and repairs

There are no user-serviceable parts inside the fixture. Do not open the housing. The laser/LED light source is not user-replaceable. Class 3R laser radiation is possible when the fixture is open – avoid direct eye exposure. Laser protective eyewear suitable for the embedded Class 3R laser source must be worn at all times by anyone who is working on the fixture when the fixture is energized.

Refer any service or repair operation not described in this Safety and Installation Manual or the fixture's User Manual to an authorized Martin service technician. Do not try to carry out such an operation yourself, as doing so may present a health or safety risk. It may also cause damage or malfunction, and it may void your product warranty.

See the fixture's User Manual for instructions on uploading new firmware to the fixture.

Installation, on-site service and maintenance can be provided worldwide by the Martin Professional Global Service organization and its approved agents, giving owners access to Martin's expertise and product knowledge in a partnership that will ensure the highest level of performance throughout the product's lifetime. Please contact your Martin supplier for details.

Specifications

For full product specifications, see the MAC One Beam area of the Martin website at www.martin.com

Compliance

FCC Compliance

This equipment has been tested and found to comply with the limits for a Class B digital device, pursuant to part 15 of the FCC Rules. These limits are designed to provide reasonable protection against harmful interference in a residential installation. This equipment generates, uses and can radiate radio frequency energy and, if not installed and used in accordance with the instructions, may cause harmful interference to radio communications. However, there is no guarantee that interference will not occur in a particular installation. If this equipment does cause harmful interference to radio or television reception, which can be determined by turning the equipment off and on, the user is encouraged to try to correct the interference by one or more of the following measures:

- Reorient or relocate the receiving antenna.
- Increase the separation between the equipment and receiver.
- Connect the equipment into an outlet on a circuit different from that to which the receiver is connected.
- Consult the dealer or an experienced radio/TV technician for help.

Canadian Interference-Causing Equipment Regulations – Règlement sur le Matériel Brouilleur du Canada

This Class B digital apparatus meets all requirements of the Canadian Interference-Causing Equipment Regulations.*Cet appareil numérique de la classe B respecte toutes les exigences du Règlement sur le Matériel Brouilleur du Canada.*

CAN ICES-003 (B) / CAN ICES-005 (B)

EU Declaration of Conformity

An EU Declaration of Conformity covering this product is available for download from the MAC One Beam product area of the Martin website at www.martin.com.

Letter of non-objection requirement when directing the beam into airspace

When the beam is not limited by either programming or disabling Dimming Zones and where the beam can be directed into any area where aircraft may be present, in the USA or Canada the operator must obtain a letter of non-objection from the FAA (Federal Aviation Administration) or Transport Canada.

Disposing of the product

Martin products are supplied in compliance with Directive 2012/19/EC of the European Parliament and of the Council of the European Union on WEEE (Waste Electrical and Electronic Equipment), where applicable.

Help preserve the environment! Ensure that this product is recycled at the end of its life. Your supplier can give details of local arrangements for the disposal of Martin products

Martin®

www.martin.com