# Exterior Linear Pro Series

***Exterior Linear Pro QUAD Cove and QUAD Graze***
***Exterior Linear Pro CTC Cove and CTC Graze***
***Exterior Linear Pro DV***

## User manual

### with Installation and Safety Manual

***QUAD Cove***

***QUAD Graze***

***QUAD DV***

***CTC Cove***

***CTC Graze***

***Junction Box Power DMX to PD***

Martin®

## User documentation revision notes

***Revision C***

Covers firmware version 2.0.0 **Note:** Upgrading to firmware version 2.0.0 will delete any scenes programmed in “Stand-Alone” and any information in “Hold last received DMX.

Adds Studio Mode setting via RDM. Adds 10-channel ‘Extended’ DMX mode with FX engine. Adds ‘Extended Segments’ DMX modes that give RGB control of segments and global CTC control.

Indian and Korean approvals added at end of Safety and Installation Manual.

©2022-2026 HARMAN PROFESSIONAL DENMARK ApS. All rights reserved. Features, specifications and appearance are subject to change without notice. HARMAN PROFESSIONAL DENMARK ApS and all affiliated companies disclaim liability for any injury, damage, direct or indirect loss, consequential or economic loss or any other loss occasioned by the use of, inability to use or reliance on the information contained in this document. Martin is a registered trademark of HARMAN PROFESSIONAL DENMARK ApS registered in the United States and/or other countries.

HARMAN PROFESSIONAL DENMARK ApS, Olof Palmes Allé 44, 8200 Aarhus N, Denmark
HARMAN PROFESSIONAL SOLUTIONS U.S., 8500 Balboa Blvd., Northridge CA 91325, USA

www.martin.com

Exterior Linear Pro User Manual with Safety and Installation Manual Revision C, P/N 5140734-00

# Table of contents


Introduction ..... 4
- Exterior Linear Pro Series ..... 4
- Features ..... 5
- Before using the product for the first time ..... 5

Setting up fixtures ..... 6
- Martin Companion® and RDM ..... 6
- Firmware updates ..... 6
- Fixture discovery ..... 6
- Supported parameters ..... 7
- Setting up DMX operation ..... 7
- Behavior when no DMX signal is present ..... 7
- Dimming curves ..... 8
- Color mode ..... 8
- Default color temperature in segment DMX control ..... 8
- Power limit mode ..... 8
- Fixture information ..... 8
- Status messages ..... 9
- Utilities ..... 9

Setting up stand-alone operation ..... 10

Operating the fixture ..... 12
- Test sequences and fixture status ..... 12
- Controlling via DMX ..... 12
- Identifying fixtures in the installation ..... 12

DMX protocols ..... 13
- QUAD color mixing models ..... 13

FX overview ..... 22

FX list ..... 23

CTC models ..... 26

RDM functions ..... 29

Compliance and specifications ..... 31

# Introduction

**Warning!** Before installing, operating or servicing the Exterior Linear Pro lighting fixture, read the latest version of the fixture's Safety and Installation Manual, paying particular attention to the Safety Precautions section. The Safety and Installation Manual is supplied with the fixture and also included at the back of this user manual.

**Important!** Full specifications for Exterior Linear Pro fixtures and accessories are available in the Exterior Linear Pro area of the Martin® website at www.martin.com.

Thank you for selecting the Exterior Linear Pro lighting fixture from Martin.

This User Guide is a supplement to the Safety and Installation Manual that is supplied with the fixture and attached to the back of this User Manual. This combined User Manual plus Safety and Installation Manual is available for download from the Exterior Linear Pro area of the Martin website at www.martin.com. The User Manual contains information that is mainly of interest for lighting designers and operators, whereas the Safety and Installation Manual contains important information for all users, especially installers and technicians.

We recommend that you check the Martin website regularly for updated documentation. We publish revised versions each time we can improve the quality of the information we provide and each time we release new firmware with changes or new features. Each time we revise this guide we list any important changes on page 2 so that you can keep track of updates.

## Exterior Linear Pro Series

The Exterior Linear Pro Series from Martin is a line of rugged LED-based outdoor lighting fixtures. Variants are available to suit a range of applications.

### Applications and design

Three types of fixture design are available:

- **Graze** variants are designed for illumination of walls or other surfaces.
- **Cove** variants are designed for a range of indirect lighting applications.
- **DV** variants are designed for direct viewing and feature 6-inch (15 cm) segment control for low-resolution animation effects.

### Color and CTC

#### *QUAD color mixing*

Exterior Linear Pro QUAD variants feature RGBW LEDs and offer RGB control with automatic addition of White. They have a resolution of 8 x LEDs per foot (30 cm). QUAD fixtures have a dedicated color temperature control channel which accurately follows the black body curve from 1000 K to 12 850 K.

Besides global control of the fixture, QUAD variants feature DMX modes that give RGB control of individual segments. In segment control modes, you can adjust the default color temperature via RDM.

QUAD fixtures are available in the following variants:

- **Graze** (15° beam angle)
- **Cove** (100° beam angle)
- **DV** (Direct View with round diffuser)

#### *CTC*

Exterior Linear Pro Controllable Color Temperature (CTC) variants feature even higher light quality and efficacy than QUAD variants. They offer White CT mixing from 2700 to 6500 K with 3 x discrete color LEDs for high efficacy, with a resolution of 12 x LEDs per foot (30 cm).

CTC fixtures are available in the following variants:

- **Graze** (9° native beam angle)
- **Cove** (100° native beam angle)

### Fixture length

All fixtures are available in **1.02 ft.** (312 mm) and **4.02 ft.** (1227 mm) lengths.

### Mounting options

A range of mounting options is available. See the Exterior Linear Pro Series Safety and Installation Manual for details.

### Asymmetric diffusers for Graze variants

Microlens asymmetric diffuser film accessories are available for Graze variants only. The diffusers give additional beam angle options. See the Exterior Linear Pro area of the Martin website at www.martin.com for details.

## Features

All Exterior Linear Pro Series fixtures feature:

- Long-life, high output LEDs
- DMX control
- RDM configuration and addressing
- Stand-alone light show function with up to 20 scenes, compatible with other Martin fixtures
- Functional and discreet optional glare shield and louvre accessories
- Operation as single units or divided into segments down to 6 inches (15 cm) in length
- IP66 ingress protection rating (suitable for permanent outdoor use)
- Integrated 100-277 V, 50/60 Hz auto-ranging AC power supply
- Easy cabling with hybrid (combined power and data) daisy-chain cables
- Range of mounting options
- Local diagnostics called up by swiping magnet over fixture.

## Before using the product for the first time

1. Check the Exterior Linear Pro area of the Martin website at www.martin.com for the most recent user documentation and technical information about the fixture. Martin user manual revisions are identified by the revision letter at the bottom of the inside cover. Read the latest revision of the Exterior Linear Pro Safety and Installation Manual that is included at the end of the User Manual, paying particular attention to the ‘Safety Precautions’ section.
2. Unpack and ensure that there is no transportation damage before using the fixture. Do not attempt to operate a damaged fixture.
3. Before operating, ensure that the voltage and frequency of the power supply match the power requirements of the fixture.
4. Remove the protective film from the front lens when you have finished installing the fixture.
5. If fixtures are exposed to a sudden temperature change, give them time to warm or cool to the ambient temperature before applying power. This will help avoid damage due to condensation.

# Setting up fixtures

**Warning!** Read the Safety and Installation Manual that is included at the end of this User Manual, paying particular attention to the Safety Precautions section, before setting up the fixture for use.

This chapter covers the use of Martin Companion to set up and manage the Exterior Linear Pro via RDM. While we recommend the use of Martin Companion, most of the commonly available RDM controllers also support the Exterior Linear Pro. Check with the controller manufacturer if you cannot find the Martin Exterior Linear Pro in the list of supported fixtures. The exact procedures and command names used by different RDM controllers vary.

### Setting up single or multiple fixtures

You can set behavior in one fixture by sending a unicast RDM command to that one fixture only, or you can set behavior in all the fixtures on the data link by sending a broadcast RDM command to all the fixtures.

## Martin Companion® and RDM

To set up Exterior Linear Pro fixtures via RDM, we invite you to use the **Martin Companion Cable** PC-to-DMX interface that is available as an accessory from Martin suppliers. This tool plugs into the USB port of a Windows PC and connects to Martin fixtures over the DMX data link. The Martin Companion Cable is designed to work together with the **Martin Companion software suite** for Windows PCs that can be downloaded free of charge from the Martin website at www.martin.com. The Martin Companion software suite will always offer the latest Exterior Linear Pro features and firmware when your PC is connected to the Internet.

Instructions for connecting the Martin Companion Cable are supplied with the tool and can also be downloaded from the Martin website.

Martin Companion offers the following features:

- Simple PC-based user interface
- Update of fixture firmware
- RDM configuration and addressing
- Stand-alone show programming with automatic start when fixtures are powered on.

### RDM functions

A full list of the RDM functions that Exterior Linear Pro fixtures support is given at the end of this chapter. These functions are generally referred to using the more specific term ‘PIDs’ or ‘Parameter IDs’.

## Firmware updates

You can update the fixture firmware via RDM using Martin Companion (see above). Firmware version 2.0.0, released mid-2026, adds significant DMX functionality including an FX engine. Note that upgrading to firmware version 2.0.0 deletes any scenes programmed in “Stand-Alone” and any information stored in “Hold last received DMX”.

## Fixture discovery

Before you can communicate with fixtures using RDM, you must send a scan command (fixture discovery command) to all the devices on the data link so that the RDM controller can identify them. It does this by retrieving each device’s factory-set unique identifier (UID). This process can take some time, depending on the number of devices on the link.

To identify the fixtures on the link:

1. Check that the fixtures are correctly connected to the RDM controller on the data link and that power is applied to all fixtures.
2. Send a discovery command via RDM (Martin Companion does this automatically as soon as the cable is connected).
3. Give the controller time to identify the devices on the link and prepare for communication with the devices.

# Supported parameters

Exterior Linear Pro fixtures can communicate the control parameters that they support to the RDM controller and give brief information on each parameter.

# Setting up DMX operation

## Setting DMX mode

This RDM command lets you set the DMX mode of fixtures on the data link. The different DMX modes available give you a range of options for color or color temperature control as well as letting you control the fixture as one unit or divide the fixture into individually controlled segments. See the 'DMX protocols' section at the end of this manual for details of the modes and control options available.

Because DMX mode affects the number of DMX channels a fixture uses, it will affect the assignment of DMX addresses to fixtures. You should therefore set the DMX mode of all the fixtures in the installation before you set their DMX addresses.

See the 'DMX protocols' section at the end of this manual for an overview of the functions available and number of DMX channels used by Exterior Linear Pro fixtures.

You can set the DMX mode of one fixture by sending a unicast RDM command to that one fixture only, or you can set the DMX mode of all the fixtures on the data link by sending a broadcast RDM command to all the devices on the link.

## Setting DMX addresses

This RDM command lets you set the DMX addresses of fixtures on the data link.

A fixture's DMX address is the first DMX channel it uses to receive data communication. It uses this channel and the channels immediately above it. If a fixture has DMX address 001 and the fixture uses four DMX channels, it will use channels 001, 002, 003 and 004. DMX address 005 will be available as a DMX address for the next fixture on the data link. If this fixture also uses four DMX channels, the next available DMX address will be 009, and so on.

You can set the DMX address of one fixture by sending a unicast RDM command to that one fixture only, or you can set all the fixtures on the data link to the same DMX address by sending a broadcast RDM command to all the devices on the link. If all the fixtures have the same DMX address, they will behave identically and you will not be able to control any single fixture independently.

An example procedure might look like this, depending on which RDM controller you use:

1. Go to Scan → Properties → Advanced → Choose PID → SET DMX START ADDRESS.
2. Enter the DMX address that you want to give to the fixture (or give to all the fixtures if you are sending a broadcast command).
3. Confirm your selection.

# Behavior when no DMX signal is present

Using RDM, you can define how fixtures behave if power is applied but fixtures are not receiving a DMX signal (or if fixtures are powered on and being controlled by DMX, and then the DMX signal stops). Four options are available:

- **Blackout** – Fixture intensity set to zero light output when no DMX signal is being received.
- **Standalone** – Fixture goes to stand-alone operation when no DMX signal is being received. If you have programmed a scene or scenes via RDM and DMX, the fixtures will display that scene when no DMX signal is present.
- **Last received value** – Fixture follows the last DMX values it received.
- **Default value** – All LEDs go to 100% intensity when no DMX signal is being received.

## Dimming curves

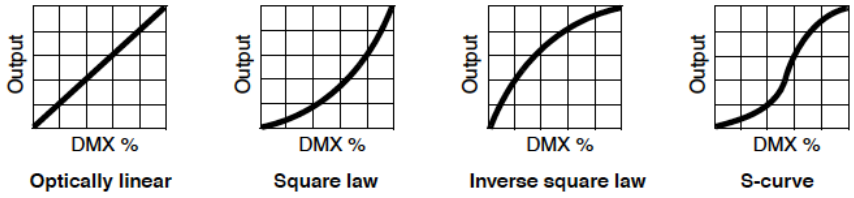


Four dimming curves are available via RDM:

- **Optically linear** – The increase in light intensity appears to be linear as DMX value is increased.
- **Square law** (default setting) – light intensity control is finer at low levels and coarser at high levels.
- **Inverse square law** – Light intensity control is coarser at low levels and finer at high levels.
- **S-Curve** – light intensity control is finer at low levels and high levels and coarser at medium levels.

## Color mode

You can select from two color management options:

- **Calibrated** – All colors stay consistent at all times.
- **Calibrated Extended** (default setting) – The White point is calibrated, but you can saturate colors to the maximum level available.

## Default color temperature in segment DMX control

In Exterior Linear Pro QUAD variants, the segment DMX control modes offer RGB control only. The global default color temperature is set to 4000 K. However, it is possible to adjust the default color temperature via RDM. Using an RDM controller such as Martin Companion, you can enter the desired color temperature from 1000 K to 12850 K using the MANUAL CTC VALUE adjustment function.

## Power limit mode

You can set the maximum power consumption of Exterior Linear Pro fixtures via RDM. The power limit mode settings let you adjust the balance between electrical power consumption versus light intensity. Three options are available:

- **Max. 12 watt per foot / 30 cm** (default setting) – Gives maximum light intensity. Power consumption will not exceed 12 W per foot / 30 cm length.
- **Max. 10 watt per foot / 30 cm** – Gives a small reduction in power consumption and light intensity.
- **Max. 5 watt per foot / 30 cm** – Gives a significant reduction in power consumption and light intensity. This setting complies with the Californian ASHRAE standard.

## Fixture information

Exterior Linear Pro fixtures can communicate the following information to the RDM controller:

- Basic fixture information – type and length of fixture.
- Name of product and manufacturer.
- Device label – This information can be edited by the user, providing a means of giving an individual fixture its own ID number, for example.
- Currently installed firmware version.
- List of temperature sensors and sensor readouts.
- Number of hours fixture has had power applied since manufacture (non-resettable).
- Number of hours LEDs have been active since manufacture (non-resettable).
- Number of on/off power cycles since manufacture (non-resettable).
- Serial number – This is a factory-set serial number that cannot be changed.

## Status messages

The Exterior Linear Pro features a self-diagnostic system that detects any issues concerning correct operation or safety (temperature that exceeds safe level, for example) and communicates the issues as status messages or warnings. These messages can be useful in connection with service and maintenance.

It is possible to:

- Call up a list of any status messages that the fixture has stored in memory.
- View information on the messages.
- Clear the stored list of status messages.

## Utilities

The following useful functions are available via RDM:

- **Pixel flip** – Lets you invert the order of the segments in 2/4/8-segment mode. This can greatly speed up programming if fixtures are not all installed in the same orientation.
- **Reset device** – Carries out a full reset of all the fixture's electronics.
- **Perform self-test** – The fixture carries out a sequence of functions designed to test the fixture.
- **Self-test description** – Lets you select from various sequences that test the fixture's functionality, the fixture's LEDs or every aspect of the fixture.
- **Factory defaults** – Deletes any custom settings that have been configured via RDM and returns the fixture to its factory default settings.
- **Studio mode** – For sensitive low-noise applications (e.g. theaters and studios) the pitch noise can be lowered by changing the LED frequency.

# Setting up stand-alone operation

Stand-alone operation in the Exterior Linear Pro requires the use of Martin Companion. This hardware cable accessory and free software offers the following features:

- Simple PC-based user interface
- Programming from a remote location over the DMX link.
- Easy programming of multiple fixtures simultaneously
- Combining different types of Martin fixture in one stand-alone show
- Stand-alone show programming with possibility of automatic start when fixtures are powered on
- Programming of up to twenty scenes with global or individual fade and hold times

In stand-alone mode, fixtures display a ‘scene’ (a color and intensity) or a sequence of up to twenty scenes if you use Martin Companion. Once scenes have been programmed, fixtures can display them without needing a DMX signal.

To program stand-alone operation using Martin Companion:

1. Connect the Martin Companion Cable and a PC running the Martin Companion application to the DMX link. Apply power to the fixtures on the DMX link that you want to program. If the fixtures have not already been discovered by Martin Companion, wait until the ***Discovery*** counter stops. This will indicate that all fixtures have been discovered.
2. Once all fixtures have been discovered and are shown in the list of connected fixtures, set them all to the desired DMX Mode using the ***Mode*** column. The DMX Mode that you select for a fixture determines what controls are available when you create scenes in the next steps.
3. See screenshot below. Select the fixtures that you want to set up for stand-alone operation using the checkboxes in the ***Select*** column, and then click ***CREATE*** under ***ACTIONS*** to continue to the next step (it is also possible to edit an existing show that has already been programmed into the fixtures if you click on ***EDIT***).

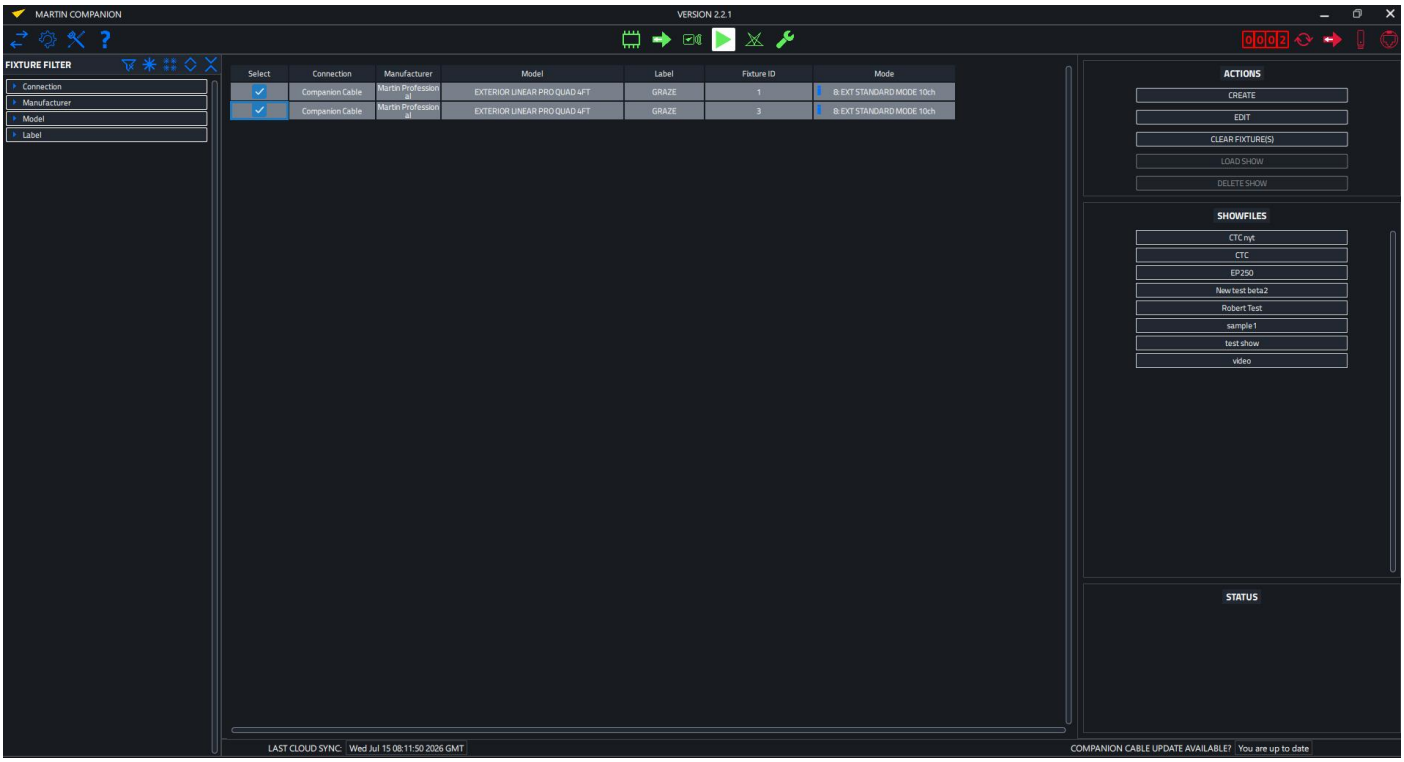

4. See screenshot below.
   a. Select the fixture or fixtures that you want to control in the list at the top of the screen.
   b. Create the desired look for the selected fixture(s) in Scene 1 using the sliders shown below. The sliders shown depend on which DMX Mode you set for the fixtures in the previous step.
   c. Select any other fixtures that you want to control in the list at the top of the screen.
   d. Repeat steps b. and c. until you are happy with the output from ALL the fixtures in Scene 1.
   e. To create a second scene, click on ***ADD SCENE*** under ***SCENE SETUP – CREATE MODE***.
   f. Repeat steps a. to d. to create the desired look for all the fixtures in scene 2.
   g. Repeat steps e. and f. to add more scenes.
   h. You can step through the scenes that have been programmed using the ***PREVIOUS*** and ***NEXT*** buttons.

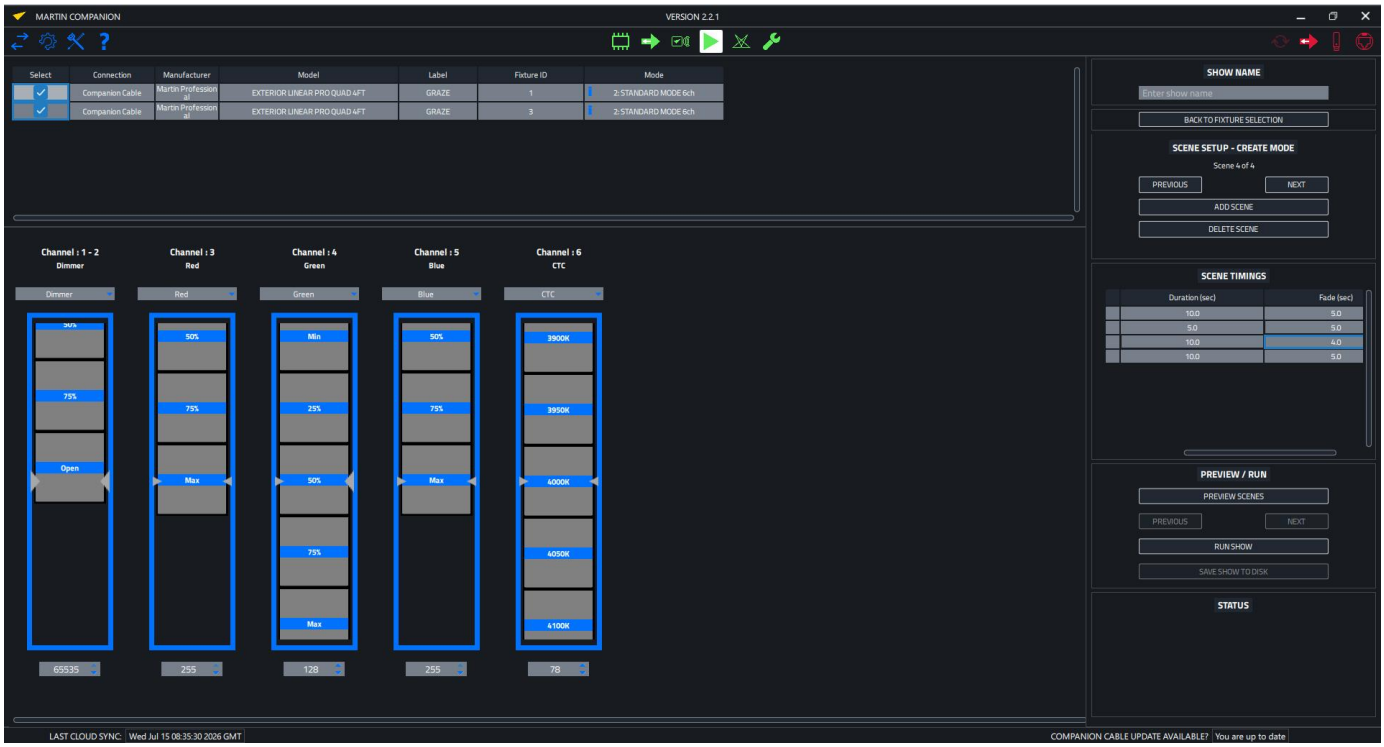


5. In the **SCENE TIMINGS** section, you can set the **Duration** and **Fade Time** for each scene. Double-click to edit timing and press **ENTER** to save new setting (hold down CTRL to select multiple scenes or down SHIFT to select all scenes). You can click **PREVIEW SCENES** to let all fixtures play the recorded scenes with the entered **Duration** and **Fade** times.
6. Click on **RUN SHOW**. The application will now tell you to disconnect the DMX cable between Martin Companion and the fixtures. Once you do that, the fixtures will start to run their stand-alone show.

## Synchronized stand-alone operation

All fixtures programmed together for stand-alone operation will also synchronize the playback of their stand-alone scenes. Fixtures need to be connected with each other using DMX cables (but not to a DMX controller) to allow this synchronization to happen. The synchronization makes sure that all fixtures switch to the same scene number with the same duration and fade time. But each fixture can have a different look programmed into it for each scene.

Note that Martin Companion automatically assigns one fixture as the stand-alone *host*, and all the others as *clients*. The host fixture only tells the client fixtures to “go to scene X with fade time Y”. The color / dimmer level / CTC that each fixture uses in a specific scene is stored inside each fixture individually. Again, not all fixtures have to show the same color in each scene. Only the duration and fade times are synchronized.

# Operating the fixture

**Warning!** Read the Safety and Installation Manual that is included at the end of this User Manual, paying particular attention to the Safety Precautions section, before operating the fixture.

Be aware that the output of LEDs, like all light sources, changes gradually over many thousands of hours of use. If you require products to perform to very precise color specifications, you may eventually need to make small readjustments at the lighting controller.

## Test sequences and fixture status

The Exterior Linear Pro Series Safety and Installation Manual that is included at the end of this User Manual contains information on displaying fixture status codes and running test sequences that you may find useful before starting fixture operation.

## Controlling via DMX

Once you have set up fixtures' DMX modes and DMX addresses via RDM, you can control fixtures using the DMX controller that is connected to the installation.

See the 'DMX protocols' section at the end of this manual for details of the control options available.

## Identifying fixtures in the installation

To help with programming scenes and controlling the installation, it is possible to send an RDM command that causes a fixture to flash a signal so that you can identify it. To identify a fixture:

1. Black out all fixtures if you have been using them.
2. Send an IDENTIFY DEVICE unicast command to an individual fixture in the installation via RDM. The fixture will respond by flashing white, letting you identify it. In Martin Companion you can simply enable the "Identify" button in the toolbar, and then any fixture(s) you select will immediately identify itself. You can even use arrow keys to navigate through the list of fixtures, with the corresponding fixture flashing as soon as you get to it.
3. If your RDM-compatible DMX controller allows it, you can now identify the fixture at the controller.

# DMX protocols

## QUAD color mixing models

QUAD models feature RGBW LEDs. The following DMX control modes are available:

***All models***

- **Standard mode** gives 16-bit control of overall fixture intensity, RGB control of the fixture using one channel per color with White added automatically, and a CTC channel with color temperature variable from 1000 K to 12 850 K in 50 K steps.
- **Raw mode** gives raw RGBW control of the fixture using one channel per color.
- **Extended mode** gives 16-bit control of overall fixture intensity, RGB control of the fixture using one channel per color with White added automatically, a CTC channel, a virtual color wheel with 23 color presets and an FX engine with a wide range of dynamic effects that run on each fixture's segments.

***4 ft. models***

- **8-segment mode** (8 x 15 cm/6 in. segments)
- **4-segment mode** (4 x 30 cm/1 ft. segments)
- **1-segment mode** (1 x 120 cm/4 ft. segment)

  These modes give RGB control of segments. You can adjust the global default color temperature via RDM.
- **Extended 4-segment mode** (4 x 30 cm/1 ft. segments) gives 16-bit control of overall fixture intensity, RGB control of the fixture using one channel per color, a CTC channel and individual RGB control of four segments.
- **Extended 8-segment mode** (8 x 15 cm/6 in. segments) gives 16-bit control of overall fixture intensity, RGB control of the fixture using one channel per color, a CTC channel and individual RGB control of eight segments.

***1 ft. models***

- **2-segment mode** (2 x 15 cm/6 in. segments)
- **1-segment mode** (1 x 30 cm/1 ft. segment)

  These modes give RGB control of segments. You can adjust the global default color temperature via RDM.
- **Extended 2-segment mode** (2 x 15 cm/6 in. segments) gives 16-bit control of overall fixture intensity, RGB control of the fixture using one channel per color, a CTC channel and individual RGB control of two segments.

### Standard Mode – 6 DMX channels (1 ft. and 4 ft. models)

| Channel | DMX Value | Function | Fade type | Default value |
|---|---|---|---|---|
| **1 and 2** | 0-65535 | **Dimmer** Overall **i**ntensity 0 – 100% | Fade | 0 |
| **3** | 0-255 | **Red** Intensity 0-100% | Fade | 255 |
| **4** | 0-255 | **Green** Intensity 0-100% | Fade | 255 |
| **5** | 0-255 | **Blue** Intensity 0-100% | Fade | 255 |
| **6** | 0-18<br>19-77<br>78<br>79-127<br>128<br>129-254<br>255 | **Color Temperature Control**<br>1000 K<br>1050 K to 3950 K in 50 K steps<br>4000 K<br>4050 K to 6450 K in 50 K steps<br>6500 K<br>6550 K to 12 800 K in 50 K steps<br>12 850 K | Fade | 78 |

## Raw Mode – 4 DMX channels (1 ft. and 4 ft. models)

| Channel | DMX Value | Function | Fade type | Default value |
|---|---|---|---|---|
| **1** | 0-255 | **Red** Intensity 0-100% | Fade | 0 |
| **2** | 0-255 | **Green** Intensity 0-100% | Fade | 0 |
| **3** | 0-255 | **Blue** 0-100% | Fade | 0 |
| **4** | 0-255 | **White** 0-100% | Fade | 0 |

## 1-segment Mode – 3 DMX channels (1 ft. and 4 ft. models)

| Channel | DMX Value | Function | Fade type | Default value |
|---|---|---|---|---|
| **1** | 0-255 | **Red** Intensity 0-100% | Fade | 0 |
| **2** | 0-255 | **Green** Intensity 0-100% | Fade | 0 |
| **3** | 0-255 | **Blue** 0-100% | Fade | 0 |

## 2-segment Mode (1 ft. models only) – 6 DMX channels

| Channel | DMX Value | Function | Fade type | Default value |
|---|---|---|---|---|
| **Segment 1** | | | | |
| **1** | 0-255 | **Red** Intensity 0-100% | Fade | 0 |
| **2** | 0-255 | **Green** Intensity 0-100% | Fade | 0 |
| **3** | 0-255 | **Blue** Intensity 0-100% | Fade | 0 |
| **Segment 2** | | | | |
| **4** | 0-255 | **Red** Intensity 0-100% | Fade | 0 |
| **5** | 0-255 | **Green** Intensity 0-100% | Fade | 0 |
| **6** | 0-255 | **Blue** Intensity 0-100% | Fade | 0 |

## 4-segment Mode (4 ft. models only) – 12 DMX channels

| Channel | DMX Value | Function | Fade type | Default value |
|---|---|---|---|---|
| **Segment 1** | | | | |
| **1** | 0-255 | **Red** Intensity 0-100% | Fade | 0 |
| **2** | 0-255 | **Green** Intensity 0-100% | Fade | 0 |
| **3** | 0-255 | **Blue** Intensity 0-100% | Fade | 0 |
| **Segment 2** | | | | |
| **4** | 0-255 | **Red** Intensity 0-100% | Fade | 0 |
| **5** | 0-255 | **Green** Intensity 0-100% | Fade | 0 |
| **6** | 0-255 | **Blue** Intensity 0-100% | Fade | 0 |
| **Segment 3** | | | | |
| **7** | 0-255 | **Red** Intensity 0-100% | Fade | 0 |
| **8** | 0-255 | **Green** Intensity 0-100% | Fade | 0 |
| **9** | 0-255 | **Blue** Intensity 0-100% | Fade | 0 |
| **Segment 4** | | | | |
| **10** | 0-255 | **Red** Intensity 0-100% | Fade | 0 |
| **11** | 0-255 | **Green** Intensity 0-100% | Fade | 0 |
| **12** | 0-255 | **Blue** Intensity 0-100% | Fade | 0 |

## 8-segment Mode (4 ft. models only) – 24 DMX channels

| Channel | DMX Value | Function | Fade type | Default value |
|---|---|---|---|---|
| **Segment 1** | | | | |
| **1** | 0-255 | **Red** Intensity 0-100% | Fade | 0 |
| **2** | 0-255 | **Green** Intensity 0-100% | Fade | 0 |
| **3** | 0-255 | **Blue** Intensity 0-100% | Fade | 0 |
| **Segment 2** | | | | |
| **4** | 0-255 | **Red** Intensity 0-100% | Fade | 0 |
| **5** | 0-255 | **Green** Intensity 0-100% | Fade | 0 |
| **6** | 0-255 | **Blue** Intensity 0-100% | Fade | 0 |
| **Segment 3** | | | | |
| **7** | 0-255 | **Red** Intensity 0-100% | Fade | 0 |
| **8** | 0-255 | **Green** Intensity 0-100% | Fade | 0 |
| **9** | 0-255 | **Blue** Intensity 0-100% | Fade | 0 |
| **Segment 4** | | | | |
| **10** | 0-255 | **Red** Intensity 0-100% | Fade | 0 |
| **11** | 0-255 | **Green** Intensity 0-100% | Fade | 0 |
| **12** | 0-255 | **Blue** Intensity 0-100% | Fade | 0 |
| **Segment 5** | | | | |
| **13** | 0-255 | **Red** Intensity 0-100% | Fade | 0 |
| **14** | 0-255 | **Green** Intensity 0-100% | Fade | 0 |
| **15** | 0-255 | **Blue** Intensity 0-100% | Fade | 0 |
| **Segment 6** | | | | |
| **16** | 0-255 | **Red** Intensity 0-100% | Fade | 0 |
| **17** | 0-255 | **Green** Intensity 0-100% | Fade | 0 |
| **18** | 0-255 | **Blue** Intensity 0-100% | Fade | 0 |
| **Segment 7** | | | | |
| **19** | 0-255 | **Red** Intensity 0-100% | Fade | 0 |
| **20** | 0-255 | **Green** Intensity 0-100% | Fade | 0 |
| **21** | 0-255 | **Blue** Intensity 0-100% | Fade | 0 |
| **Segment 8** | | | | |
| **22** | 0-255 | **Red** Intensity 0-100% | Fade | 0 |
| **23** | 0-255 | **Green** Intensity 0-100% | Fade | 0 |
| **24** | 0-255 | **Blue** Intensity 0-100% | Fade | 0 |

## Extended Mode – 10 DMX channels (1 ft. and 4 ft. models)

| Channel | DMX Value | Function | Fade type | Default value |
|---|---|---|---|---|
| **1 and 2** | 0-65535 | **Dimmer** Overall intensity 0 – 100% | Fade | 0 |
| **3** | 0-255 | **Red** Intensity 0-100% | Fade | 255 |
| **4** | 0-255 | **Green** Intensity 0-100% | Fade | 255 |
| **5** | 0-255 | **Blue** Intensity 0-100% | Fade | 255 |
| **6** | 0-18<br>19-77<br>78<br>79-127<br>128<br>129-254<br>255 | **Color Temperature Control**<br>1000 K<br>1050 K to 3950 K in 50 K steps<br>4000 K<br>4050 K to 6450 K in 50 K steps<br>6500 K<br>6550 K to 12 800 K in 50 K steps<br>12 850 K | Fade | 78 |
| **7** | 0-10<br><br>11-12<br>13-14<br>15-16<br>17-18<br>19-20<br>21-22<br>23-24<br>25-26<br>27-28<br>29-30<br>31-32<br>33-34<br>35-36<br>37-38<br>39-40<br>41-42<br>43-44<br>45-46<br>47-48<br>49-50<br>51-52<br>53-54<br>55-56<br>57-58<br>59-60<br>61-62<br>63-64<br>65-66<br>67-68<br>69-70<br>71-72<br>73-74<br>75-76<br>77-78<br>79-80<br>81-82<br>83-84<br>85-86<br>87-88<br>89-90<br>91-92<br>93-94<br>95-96 | **Virtual color wheel**<br>Open<br>**Solid Colors**<br>Moroccan Pink (LEE 790)<br>Pink (LEE 157)<br>Special Rose Pink (LEE 332)<br>Follies Pink (LEE 328)<br>Fuchsia Pink (LEE 345)<br>Surprise Pink (LEE 194)<br>Congo Blue (LEE 181)<br>Tokyo Blue (LEE 071)<br>Deep Blue (LEE 120)<br>Just Blue (LEE 079)<br>Medium Blue (LEE 132)<br>Double CT Blue (LEE 200)<br>Slate Blue (LEE 161)<br>Full CT Blue (LEE 201)<br>Half CT Blue (LEE 202)<br>Steel Blue (LEE 117)<br>Lighter Blue (LEE 353)<br>Light Blue (LEE 118)<br>Medium Blue Green (LEE 116)<br>Dark Green (LEE 124)<br>Primary Green (LEE 139)<br>Moss Green (LEE 089)<br>Fern Green (LEE 122)<br>Jas Green (LEE 738)<br>Lime Green (LEE 088)<br>Spring Yellow (LEE 100)<br>Deep Amber (LEE 104)<br>Chrome Orange (LEE 179)<br>Orange (LEE 105)<br>Gold Amber (LEE 021)<br>Millennium Gold (LEE 778)<br>Deep Golden Amber (LEE 135)<br>Flame Red (LEE 164)<br>Red Magenta (LEE 113)<br>Medium Lavender (LEE 343)<br>Pure White (White LEDs only)<br>Pure Red (Red LEDs only)<br>Pure Yellow (Red + Green LEDs only)<br>Pure Green (Green LEDs only)<br>Pure Cyan (Green + Blue LEDs only)<br>Pure Blue (Blue LEDs only)<br>Pure Magenta (Blue + Red LEDs only)<br>Peacock Blue (LEE 115) | Snap | 0 |

| Channel | DMX Value | Function | Fade type | Default value |
|---|---|---|---|---|
| | 97-98<br>99-100<br>101-102<br>103-104<br>105-106<br>107 - 190<br><br>191 - 214<br>215 – 219<br>220 - 243<br><br>244 - 247<br>248 - 251<br>252 - 255 | Dark Lavender (LEE 180)<br>Double CT Orange (LEE 287)<br>Full CT Orange (LEE 204)<br>Half CT Orange (LEE 205)<br>Deep Straw (LEE 015)<br>No function<br>**Continuous Rotation**<br>CW, Fast → Slow<br>Stop (Wheel stops at current color)<br>CCW, Slow → Fast<br>**Random Slots**<br>Fast<br>Medium<br>Slow | | |
| **8** | 0 - 255 | **FX Select** (see **'FX list'** on page 22)<br>FX selection 1 -255 | Snap | 0 |
| **9** | 0 - 126<br>127 - 128<br>129 - 255 | **FX Adjust**<br>Reversed Fast → Slow<br>Stop<br>Forwards Slow → Fast | Fade | 128 |
| **10** | 0<br>1 - 35<br>36<br>37 - 100<br>101 - 120<br>121 - 140<br>141 - 255 | **FX Synchronization**<br>No sync<br>Fixture offset (Shift from 10–350°)<br>Synchronized<br>*No function*<br>Random start<br>Random duration<br>*No function* | Snap | 36 |

## Extended 2-Segment Mode (1 ft. models only) – 12 DMX channels

| Channel | DMX Value | Function | Fade type | Default value |
|---|---|---|---|---|
| **1 and 2** | 0-65535 | **Dimmer** Overall **i**ntensity 0 – 100% | Fade | 0 |
| **3** | 0-255 | **Red** Intensity 0-100% | Fade | 255 |
| **4** | 0-255 | **Green** Intensity 0-100% | Fade | 255 |
| **5** | 0-255 | **Blue** Intensity 0-100% | Fade | 255 |
| **6** | 0-18<br>19-77<br>78<br>79-127<br>128<br>129-254<br>255 | **Color Temperature Control**<br>1000 K<br>1050 K to 3950 K in 50 K steps<br>4000 K<br>4050 K to 6450 K in 50 K steps<br>6500 K<br>6550 K to 12 800 K in 50 K steps<br>12 850 K | Fade | 78 |
| **7** | 0-255 | **Red, Segment 1** Intensity 0-100% | Fade | 255 |
| **8** | 0-255 | **Green, Segment 1** Intensity 0-100% | Fade | 255 |
| **9** | 0-255 | **Blue, Segment 1** Intensity 0-100% | Fade | 255 |
| **10** | 0-255 | **Red, Segment 2** Intensity 0-100% | Fade | 255 |
| **11** | 0-255 | **Green, Segment 2** Intensity 0-100% | Fade | 255 |
| **12** | 0-255 | **Blue, Segment 2** Intensity 0-100% | Fade | 255 |

*Global RGB channels are added to the Segment RGB channels using HTP (Highest Takes Priority).*

## Extended 4-Segment Mode (4 ft. models only) – 18 DMX channels

| Channel | DMX Value | Function | Fade type | Default value |
|---|---|---|---|---|
| **1 and 2** | 0-65535 | **Dimmer** Overall intensity 0 – 100% | Fade | 0 |
| **3** | 0-255 | **Red** Intensity 0-100% | Fade | 255 |
| **4** | 0-255 | **Green** Intensity 0-100% | Fade | 255 |
| **5** | 0-255 | **Blue** Intensity 0-100% | Fade | 255 |
| **6** | 0-18<br>19-77<br>78<br>79-127<br>128<br>129-254<br>255 | **Color Temperature Control**<br>1000 K<br>1050 K to 3950 K in 50 K steps<br>4000 K<br>4050 K to 6450 K in 50 K steps<br>6500 K<br>6550 K to 12 800 K in 50 K steps<br>12 850 K | Fade | 78 |
| **7** | 0-255 | **Red, Segment 1** Intensity 0-100% | Fade | 255 |
| **8** | 0-255 | **Green, Segment 1** Intensity 0-100% | Fade | 255 |
| **9** | 0-255 | **Blue, Segment 1** Intensity 0-100% | Fade | 255 |
| **10** | 0-255 | **Red, Segment 2** Intensity 0-100% | Fade | 255 |
| **11** | 0-255 | **Green, Segment 2** Intensity 0-100% | Fade | 255 |
| **12** | 0-255 | **Blue, Segment 2** Intensity 0-100% | Fade | 255 |
| **13** | 0-255 | **Red, Segment 3** Intensity 0-100% | Fade | 255 |
| **14** | 0-255 | **Green, Segment 3** Intensity 0-100% | Fade | 255 |
| **15** | 0-255 | **Blue, Segment 3** Intensity 0-100% | Fade | 255 |
| **16** | 0-255 | **Red, Segment 4** Intensity 0-100% | Fade | 255 |
| **17** | 0-255 | **Green, Segment 4** Intensity 0-100% | Fade | 255 |
| **18** | 0-255 | **Blue, Segment 4** Intensity 0-100% | Fade | 255 |

*Global RGB channels are added to the Segment RGB channels using HTP (Highest Takes Priority).*

## Extended 8-Segment Mode (4 ft. models only) – 30 DMX channels

| Channel | DMX Value | Function | Fade type | Default value |
|---|---|---|---|---|
| **1 and 2** | 0-65535 | **Dimmer** Overall **i**ntensity 0 – 100% | Fade | 0 |
| **3** | 0-255 | **Red** Intensity 0-100% | Fade | 255 |
| **4** | 0-255 | **Green** Intensity 0-100% | Fade | 255 |
| **5** | 0-255 | **Blue** Intensity 0-100% | Fade | 255 |
| **6** | 0-18<br>19-77<br>78<br>79-127<br>128<br>129-254<br>255 | **Color Temperature Control**<br>1000 K<br>1050 K to 3950 K in 50 K steps<br>4000 K<br>4050 K to 6450 K in 50 K steps<br>6500 K<br>6550 K to 12 800 K in 50 K steps<br>12 850 K | Fade | 78 |
| **7** | 0-255 | **Red, Segment 1** Intensity 0-100% | Fade | 255 |
| **8** | 0-255 | **Green, Segment 1** Intensity 0-100% | Fade | 255 |
| **9** | 0-255 | **Blue, Segment 1** Intensity 0-100% | Fade | 255 |
| **10** | 0-255 | **Red, Segment 2** Intensity 0-100% | Fade | 255 |
| **11** | 0-255 | **Green, Segment 2** Intensity 0-100% | Fade | 255 |
| **12** | 0-255 | **Blue, Segment 2** Intensity 0-100% | Fade | 255 |
| **13** | 0-255 | **Red, Segment 3** Intensity 0-100% | Fade | 255 |
| **14** | 0-255 | **Green, Segment 3** Intensity 0-100% | Fade | 255 |
| **15** | 0-255 | **Blue, Segment 3** Intensity 0-100% | Fade | 255 |
| **16** | 0-255 | **Red, Segment 4** Intensity 0-100% | Fade | 255 |
| **17** | 0-255 | **Green, Segment 4** Intensity 0-100% | Fade | 255 |
| **18** | 0-255 | **Blue, Segment 4** Intensity 0-100% | Fade | 255 |
| **19** | 0-255 | **Red, Segment 5** Intensity 0-100% | Fade | 255 |
| **20** | 0-255 | **Green, Segment 5** Intensity 0-100% | Fade | 255 |
| **21** | 0-255 | **Blue, Segment 5** Intensity 0-100% | Fade | 255 |
| **22** | 0-255 | **Red, Segment 6** Intensity 0-100% | Fade | 255 |
| **23** | 0-255 | **Green, Segment 6** Intensity 0-100% | Fade | 255 |
| **24** | 0-255 | **Blue, Segment 6** Intensity 0-100% | Fade | 255 |
| **25** | 0-255 | **Red, Segment 7** Intensity 0-100% | Fade | 255 |
| **26** | 0-255 | **Green, Segment 7** Intensity 0-100% | Fade | 255 |
| **27** | 0-255 | **Blue, Segment 7** Intensity 0-100% | Fade | 255 |
| **28** | 0-255 | **Red, Segment 8** Intensity 0-100% | Fade | 255 |
| **29** | 0-255 | **Green, Segment 8** Intensity 0-100% | Fade | 255 |
| **30** | 0-255 | **Blue, Segment 8** Intensity 0-100% | Fade | 255 |

*Global RGB channels are added to the Segment RGB channels using HTP (Highest Takes Priority).*

# FX overview

The FX (pre-programmed macros) that are available in Extended DMX modes are outlined below:

| FX type | Description | Number of effects | Color adjustments | FX adjustment (speed/ direction) | FX synchro-nization (offsetting) |
|---|---|---|---|---|---|
| **Segment intensity** | **Intensity effects on individual segments** | 55 | • RGB sets foreground color<br>• Virtual color wheel sets background color | ✓ | ✓ |
| **Segment color** | **Color effects on individual segments** | 44 | • Predefined color effects<br>• Ignores DMX colors | ✓ | ✓ |

# FX list

The table below lists the FX patterns available in “Extended” DMX modes.

| Type | DMX | Name |
|---|---|---|
| **Segment intensity** | 0-18 | *No FX* |
| | 19 | Pixel Killer Static |
| | 20 | Sparkle Stars |
| | 21 | Sparkle Stars Heavy |
| | 22 | Lightning Flashes Random |
| | 23 | Lightning Flashes Random Heavy |
| | 24 | Lightning Flashes Linear |
| | 25 | Lightning Flashes Linear Heavy |
| | 26 | Fiberoptic |
| | 27 | Noise |
| | 28 | Build Up/Down Step |
| | 29 | Build Up/Down Fade |
| | 30 | Build Up/Down Random Step |
| | 31 | Build Up/Down Random Fade |
| | 32 | Random 1-segment Step |
| | 33 | Random 1-segment Fade |
| | 34 | Random 2-segment Step |
| | 35 | Random 2-segment Fade |
| | 36 | Random 4-segment Step |
| | 37 | Random 4-segment Fade |
| | 38 | Split Static |
| | 39 | Split Bounce Step |
| | 40 | Split Bounce Fade |
| | 41 | Odd-Even 1-2 Step |
| | 42 | Odd-Even 1-2 Fade |
| | 43 | Odd-Even 2-4 Step |
| | 44 | Odd-Even 2-4 Fade |
| | 45 | Odd-Even 4-8 Step |
| | 46 | Odd-Even 4-8 Fade |
| | 47 | 1-4 Chase Step |
| | 48 | 1-4 Chase Fade |
| | 49 | 2-4 Chase Step |
| | 50 | 2-4 Chase Fade |
| | 51 | 1-8 Chase Step |
| | 52 | 1-8 Chase Fade |
| | 53 | 1-8 Chase Mirror Step |
| | 54 | 1-8 Chase Mirror Fade |
| | 55 | 2-8 Chase Step |
| | 56 | 2-8 Chase Fade |
| | 57 | 2-8 Chase Mirror Step |
| | 58 | 2-8 Chase Mirror Fade |

| | | |
|---|---|---|
| **Segment intensity (contd.)** | 59 | Snake 1 segment Step |
| | 60 | Snake 1 segment Fade |
| | 61 | Snake 2 segment Step |
| | 62 | Snake 2 segment Fade |
| | 63 | Snake Bounce 1 segment Step |
| | 64 | Snake Bounce 1 segment Fade |
| | 65 | Snake Bounce 2 segment Step |
| | 66 | Snake Bounce 2 segment Fade |
| | 67 | Nightrider |
| | 68 | Starfield |
| | 69 | Starfield Heavy |
| | 70 | Snowflakes |
| | 71 | Snowflakes Heavy |
| | 72 | Rain |
| | 73 | Rain Heavy |
| | 74 | Waterdrop |
| | 75-175 | *No FX* |
| **Color segments** | 176 | Rainbow segments (in segment order) Step |
| | 177 | Rainbow segments (in segment order) Fade |
| | 178 | Random Rainbow segments Step |
| | 179 | Random Rainbow segments Fade |
| | 180 | Red-Yellow segments Step |
| | 181 | Red-Yellow segments Fade |
| | 182 | Random Red-Yellow segments Step |
| | 183 | Random Red-Yellow segments Fade |
| | 184 | Yellow-Green segments Step |
| | 185 | Yellow-Green segments Fade |
| | 186 | Random Yellow-Green segments Step |
| | 187 | Random Yellow-Green segments Fade |
| | 188 | Green-Cyan segments Step |
| | 189 | Green-Cyan segments Fade |
| | 190 | Random Green-Cyan segments Step |
| | 191 | Random Green-Cyan segments Fade |
| | 192 | Cyan-Blue segments Step |
| | 193 | Cyan-Blue segments Fade |
| | 194 | Random Cyan-Blue segments Step |
| | 195 | Random Cyan-Blue segments Fade |
| | 196 | Blue-Magenta segments Step |
| | 197 | Blue-Magenta segments Fade |
| | 198 | Random Blue-Magenta segments Step |
| | 199 | Random Blue-Magenta segments Fade |
| | 200 | Magenta-Red segments Step |
| | 201 | Magenta-Red segments Fade |
| | 202 | Random Magenta-Red segments Step |
| | 203 | Random Magenta-Red segments Fade |
| | 204 | Red, White, Blue Step |
| | 205 | Red, White, Blue Fade |

| | | |
|---|---|---|
| **Color segments (contd.)** | 206 | Fire |
| | 207 | Water |
| | 208 | Swimming pool |
| | 209 | Ice |
| | 210 | Hot and cold |
| | 211 | Warm and fuzzy |
| | 212 | Silver and gold |
| | 213 | Gold and silver |
| | 214 | Electric arc |
| | 215 | Plasma |
| | 216 | Police Car 1 |
| | 217 | Police Car 2 |
| | 218 | Police Car 3 |
| | 219 | Welding |
| | 220-255 | *No FX* |

# CTC models

Color Temperature Control (variable CT white) models offer 0 to 100% intensity control and color temperature control from 2700 K to 6500 K in 50 K steps. The following DMX control modes are available:

***All models***

- **Standard mode** gives 16-bit control of overall fixture intensity and a CTC channel with color temperature variable from 2700 K to 6500 K in 50 K steps.

***4 ft. models***

- **8-segment mode** (8 x 15 cm/6 in. segments)
- **4-segment mode** (4 x 30 cm/1 ft. segments)
- **1-segment mode** (1 x 120 cm/4 ft. segment)

  give raw control of 2700 K, 4000 K and 6500 K white LEDs, allowing flexible control of color temperature and intensity.

***1 ft. models***

- **2-segment mode** (2 x 15 cm/6 in. segments)
- **1-segment mode** (1 x 30 cm/1 ft. segment)

  give raw control of 2700 K, 4000 K and 6500 K white LEDs, allowing flexible control of color temperature and intensity.

## Standard Mode – 3 DMX channels

| Channel | DMX Value | Function | Fade type | Default value |
|---|---|---|---|---|
| **1 and 2** | 0-65535 | **Dimmer** Overall intensity 0 – 100% | Fade | 0 |
| **3** | 0-51<br>52<br>53-77<br>78<br>79-127<br>128-255 | **Color Temperature Control**<br>2700 K<br>2700 K<br>2750 K to 3950 K in 50 K steps<br>4000 K<br>4050 K to 6450 K in 50 K steps<br>6500 K | Fade | 78 |

## 1-segment Mode – 3 DMX channels

| Channel | DMX Value | Function | Fade type | Default value |
|---|---|---|---|---|
| **1** | 0-255 | **2700 K** Intensity 0-100% | Fade | 0 |
| **2** | 0-255 | **4000 K** Intensity 0-100% | Fade | 0 |
| **3** | 0-255 | **6500 K** Intensity 0-100% | Fade | 0 |

## 2-segment Mode (1 ft. models only) – 6 DMX channels

| Channel | DMX Value | Function | Fade type | Default value |
|---|---|---|---|---|
| **Segment 1** | | | | |
| **1** | 0-255 | **2700 K** Intensity 0-100% | Fade | 0 |
| **2** | 0-255 | **4000 K** Intensity 0-100% | Fade | 0 |
| **3** | 0-255 | **6500 K** Intensity 0-100% | Fade | 0 |
| **Segment 2** | | | | |
| **4** | 0-255 | **2700 K** Intensity 0-100% | Fade | 0 |
| **5** | 0-255 | **4000 K** Intensity 0-100% | Fade | 0 |
| **6** | 0-255 | **6500 K** Intensity 0-100% | Fade | 0 |

## 4-segment Mode (4 ft. models only) – 12 DMX channels

| Channel | DMX Value | Function | Fade type | Default value |
|---|---|---|---|---|
| **Segment 1** | | | | |
| **1** | 0-255 | **2700 K** Intensity 0-100% | Fade | 0 |
| **2** | 0-255 | **4000 K** Intensity 0-100% | Fade | 0 |
| **3** | 0-255 | **6500 K** Intensity 0-100% | Fade | 0 |
| **Segment 2** | | | | |
| **4** | 0-255 | **2700 K** Intensity 0-100% | Fade | 0 |
| **5** | 0-255 | **4000 K** Intensity 0-100% | Fade | 0 |
| **6** | 0-255 | **6500 K** Intensity 0-100% | Fade | 0 |
| **Segment 3** | | | | |
| **7** | 0-255 | **2700 K** Intensity 0-100% | Fade | 0 |
| **8** | 0-255 | **4000 K** Intensity 0-100% | Fade | 0 |
| **9** | 0-255 | **6500 K** Intensity 0-100% | Fade | 0 |
| **Segment 4** | | | | |
| **10** | 0-255 | **2700 K** Intensity 0-100% | Fade | 0 |
| **11** | 0-255 | **4000 K** Intensity 0-100% | Fade | 0 |
| **12** | 0-255 | **6500 K** Intensity 0-100% | Fade | 0 |

## 8-segment Mode (4 ft. models only) – 24 DMX channels

| Channel | DMX Value | Function | Fade type | Default value |
|---|---|---|---|---|
| **Segment 1** | | | | |
| **1** | 0-255 | **2700 K** Intensity 0-100% | Fade | 0 |
| **2** | 0-255 | **4000 K** Intensity 0-100% | Fade | 0 |
| **3** | 0-255 | **6500 K** Intensity 0-100% | Fade | 0 |
| **Segment 2** | | | | |
| **4** | 0-255 | **2700 K** Intensity 0-100% | Fade | 0 |
| **5** | 0-255 | **4000 K** Intensity 0-100% | Fade | 0 |
| **6** | 0-255 | **6500 K** Intensity 0-100% | Fade | 0 |
| **Segment 3** | | | | |
| **7** | 0-255 | **2700 K** Intensity 0-100% | Fade | 0 |
| **8** | 0-255 | **4000 K** Intensity 0-100% | Fade | 0 |
| **9** | 0-255 | **6500 K** Intensity 0-100% | Fade | 0 |
| **Segment 4** | | | | |
| **10** | 0-255 | **2700 K** Intensity 0-100% | Fade | 0 |
| **11** | 0-255 | **4000 K** Intensity 0-100% | Fade | 0 |
| **12** | 0-255 | **6500 K** Intensity 0-100% | Fade | 0 |
| **Segment 5** | | | | |
| **13** | 0-255 | **2700 K** Intensity 0-100% | Fade | 0 |
| **14** | 0-255 | **4000 K** Intensity 0-100% | Fade | 0 |
| **15** | 0-255 | **6500 K** Intensity 0-100% | Fade | 0 |
| **Segment 6** | | | | |
| **16** | 0-255 | **2700 K** Intensity 0-100% | Fade | 0 |
| **17** | 0-255 | **4000 K** Intensity 0-100% | Fade | 0 |
| **18** | 0-255 | **6500 K** Intensity 0-100% | Fade | 0 |
| **Segment 7** | | | | |
| **19** | 0-255 | **2700 K** Intensity 0-100% | Fade | 0 |
| **20** | 0-255 | **4000 K** Intensity 0-100% | Fade | 0 |
| **21** | 0-255 | **6500 K** Intensity 0-100% | Fade | 0 |
| **Segment 8** | | | | |
| **22** | 0-255 | **2700 K** Intensity 0-100% | Fade | 0 |
| **23** | 0-255 | **4000 K** Intensity 0-100% | Fade | 0 |
| **24** | 0-255 | **6500 K** Intensity 0-100% | Fade | 0 |

# RDM functions

Exterior Linear Pro fixtures support the following RDM PIDs:

| PID | Name | Description | GET | SET |
|---|---|---|---|---|
| **Device discovery** | | | | |
| 0x0001 | DISC_UNIQUE_BRANCH | Fixture discovery | N/A | N/A |
| 0x0002 | DISC_MUTE | Fixture discovery | N/A | N/A |
| 0x0003 | DISC_UN_MUTE | Fixture discovery | N/A | N/A |
| **Device information** | | | | |
| 0x0060 | DEVICE_INFO | Get basic fixture info | ✓ | |
| 0x0080 | DEVICE_MODEL_DESCRIPTION | Product name | ✓ | |
| 0x0081 | MANUFACTURER_LABEL | Manufacturer name | ✓ | |
| 0x0082 | DEVICE_LABEL | Info label (user-settable) | ✓ | ✓ |
| 0x8003 | FIXTURE_ID | Fixture number (user- settable) | ✓ | ✓ |
| 0x8700 | SERIAL_NUMBER | Fixture serial number | ✓ | |
| 0x00C0 | SOFTWARE_VERSION_LABEL | Firmware version | ✓ | |
| 0x0200 | SENSOR_DEFINITION | Sensor description | ✓ | |
| 0x0201 | SENSOR_VALUE | Sensor value | ✓ | ✓ |
| 0x0400 | DEVICE_HOURS | Total hours of operation (non-resettable) | ✓ | ✓ |
| 0x0401 | LAMP_HOURS | Total LED hours (non-resettable) | ✓ | ✓ |
| 0x0405 | DEVICE_POWER_CYCLES | Total fixture power cycles (non-resettable) | ✓ | ✓ |
| **DMX setup** | | | | |
| 0x00E0 | DMX_PERSONALITY | DMX mode | ✓ | ✓ |
| 0x00E1 | DMX_PERSONALITY_DESCRIPTION | DMX mode details | ✓ | |
| 0x00F0 | DMX_START_ADDRESS | DMX address | ✓ | ✓ |
| 0x0121 | SLOT_DESCRIPTION | DMX channel details | ✓ | |
| **Device management** | | | | |
| 0x0050 | SUPPORTED_PARAMETERS | Parameter discovery | ✓ | |
| 0x0051 | PARAMETER_DESCRIPTION | Parameter discovery | ✓ | |
| 0x0090 | FACTORY_DEFAULTS | Reset to factory defaults | ✓ | ✓ |
| 0x1000 | IDENTIFY_DEVICE | Identify fixture in rig | ✓ | ✓ |
| 0x1001 | RESET_DEVICE | Reset fixture | | ✓ |
| 0x1020 | PERFORM_SELFTEST | Run self-test | ✓ | ✓ |
| 0x1021 | SELF_TEST_DESCRIPTION | Self-test description | ✓ | |
| 0x8004 | COLOR_MODE | Set color mode | ✓ | ✓ |
| 0x8310 | DIMMER_CURVE | Set dimmer curve | ✓ | ✓ |
| 0x8330 | STUDIO_MODE | Suitable for critical theatrical applications | ✓ | ✓ |
| 0x832F | PIXEL_FLIP_MODE | Invert order of segments | ✓ | ✓ |
| 0x8335 | POWER_LIMIT_MODE | Max. power per foot setting | ✓ | ✓ |
| 0x8339 | MANUAL_CTC_VALUE | Set default color temp. in Segment DMX modes | ✓ | ✓ |

| PID | Name | Description | GET | SET |
|---|---|---|---|---|
| **Status messages** | | | | |
| 0x0020 | QUEUED_MESSAGE | Get queued messages | ✓ | |
| 0x0030 | STATUS_MESSAGES | Get status/error information | ✓ | |
| 0x0031 | STATUS_ID_DESCRIPTION | Status/error description | ✓ | |
| 0x0032 | CLEAR_STATUS_ID | Clear status/error queue | ✓ | ✓ |
| **Stand-alone operation** | | | | |
| 0x1030 | CAPTURE_PRESET | Capture current DMX values for use as stand-alone preset | | ✓ |
| 0x1031 | PRESET_PLAYBACK | Play back stand-alone preset | ✓ | ✓ |
| 0x8220 | MANUAL_MODE_OVERRIDE | Remote manual control | ✓ | ✓ |
| 0x810B | PRESET_PLAYBACK_LIMIT | Stand-alone cue counter | ✓ | ✓ |
| 0x8101 | SYNCHRONIZED | Sync mode in stand-alone | ✓ | ✓ |
| 0x810C | OFFLINE_MODE | Set behavior when DMX stops | ✓ | ✓ |

| | |
|---|---|
| 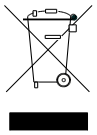 | **Disposing of this product**<br>Martin® products are supplied in compliance with Directive 2012/19/EC of the European Parliament and of the Council of the European Union on WEEE (Waste Electrical and Electronic Equipment), where applicable. Help preserve the environment! Ensure that this product is recycled at the end of its life. Your supplier can give details of local arrangements for the disposal of Martin products. |

# Compliance and specifications

See the Safety and Installation Manual attached to this user manual for details of this product's compliance with national and international standards, FCC rules etc. See the Martin website at www.martin.com for technical specifications for this product.

# Exterior Linear Pro Series

## Exterior Linear Pro QUAD Cove and QUAD Graze
## Exterior Linear Pro QUAD DV
## Exterior Linear Pro CTC Cove and CTC Graze

# Safety and Installation manual

*QUAD Cove*

*QUAD Graze*

*QUAD DV*

*CTC Cove*

*CTC Graze*

*Junction Box Power DMX to PD*

Martin®

# Table of contents

Dimensions ..... 3
Safety information ..... 8
Introduction ..... 11
General information ..... 11
Before using the product for the first time ..... 11
Physical installation ..... 12
Fixture location ..... 12
Mounting the fixture ..... 12
Mounting bracket accessories ..... 13
AC power and data connection ..... 15
Power requirements ..... 15
Safety limits for chains of fixtures ..... 15
System layout ..... 16
Connecting via the Martin Junction Box ..... 16
Interconnecting a chain of fixtures ..... 17
Data network requirements ..... 18
Accessories ..... 19
Installing a glare shield ..... 19
Installing a louvre ..... 19
Installing a microlens diffuser (Graze fixtures only) ..... 20
Maintenance ..... 21
Running test sequences ..... 21
Managing humidity ..... 22
Cleaning ..... 22

©2022-2026 HARMAN PROFESSIONAL DENMARK ApS. All rights reserved. Features, specifications and appearance are subject to change without notice. HARMAN PROFESSIONAL DENMARK ApS and all affiliated companies disclaim liability for any injury, damage, direct or indirect loss, consequential or economic loss or any other loss occasioned by the use of, inability to use or reliance on the information contained in this document. Martin is a registered trademark of HARMAN PROFESSIONAL DENMARK ApS registered in the United States and/or other countries.

HARMAN PROFESSIONAL DENMARK ApS, Olof Palmes Allé 44, 8200 Aarhus N, Denmark
HARMAN PROFESSIONAL SOLUTIONS U.S., 8500 Balboa Blvd., Northridge CA 91325, USA

www.martin.com

Exterior Linear Pro Safety and Installation Manual Revision C

# Dimensions

All dimensions are given in millimeters

***Exterior Linear Pro QUAD Graze, QUAD Cove and CT 1 ft.***

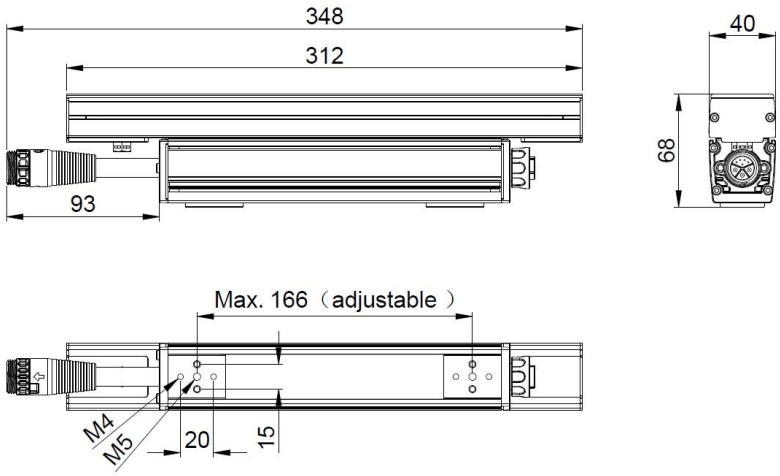


***Exterior Linear Pro QUAD Graze, QUAD Cove and CT 1 ft.***
***with mounting bracket accessories***

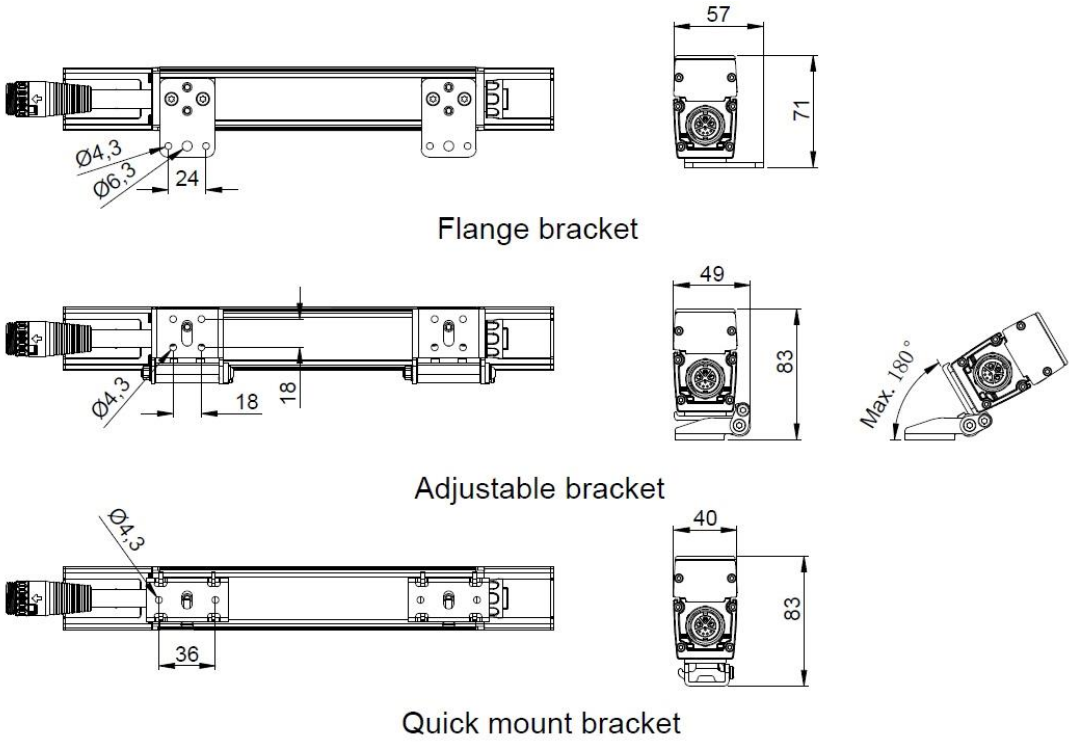

### *Exterior Linear Pro QUAD Graze, QUAD Cove and CT 4 ft.*

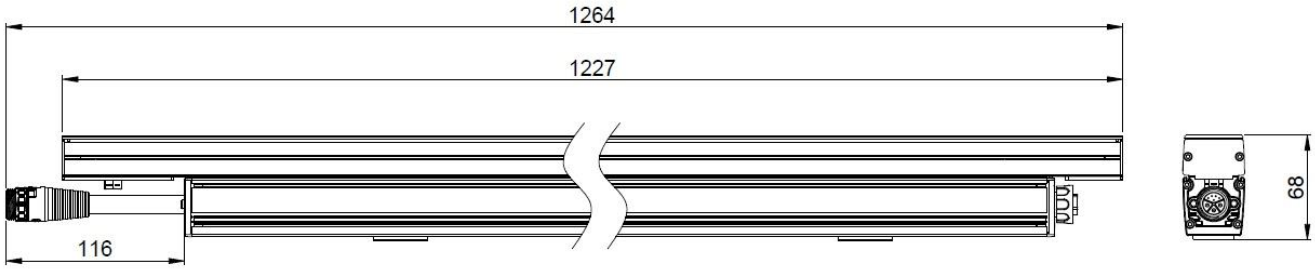


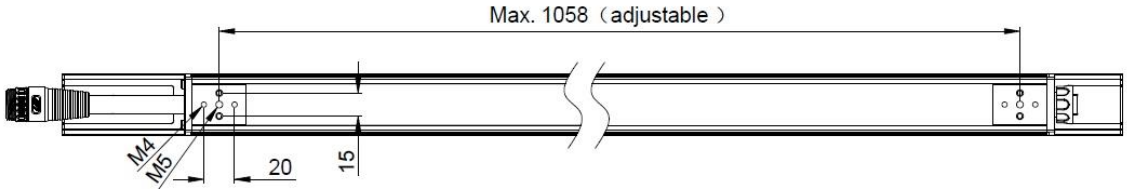


### *Exterior Linear Pro QUAD Graze, QUAD Cove and CT 1 ft.*
### *With mounting bracket accessories*

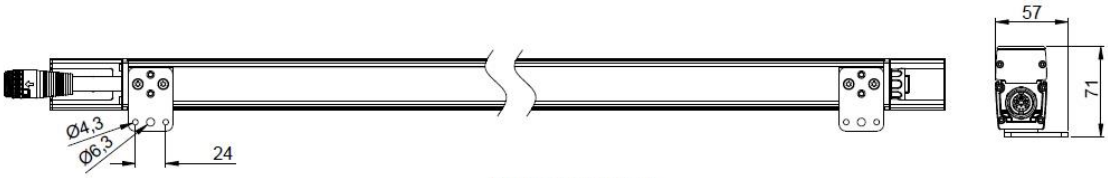


Flange bracket

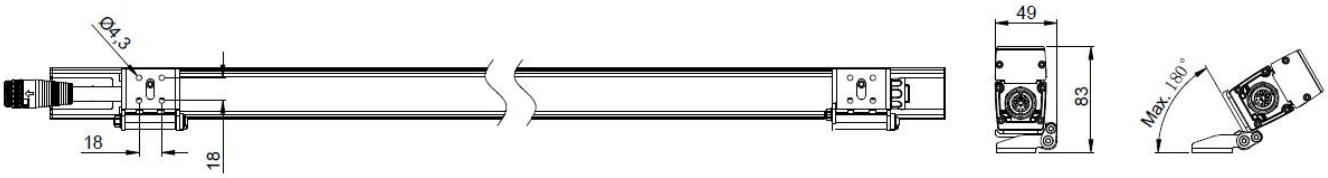


Adjustable bracket

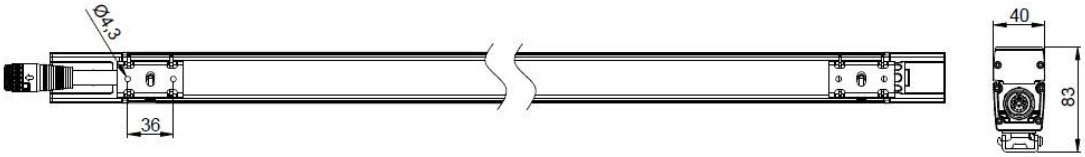


Quick mount bracket

### *Exterior Linear Pro QUAD DV 1 ft.*

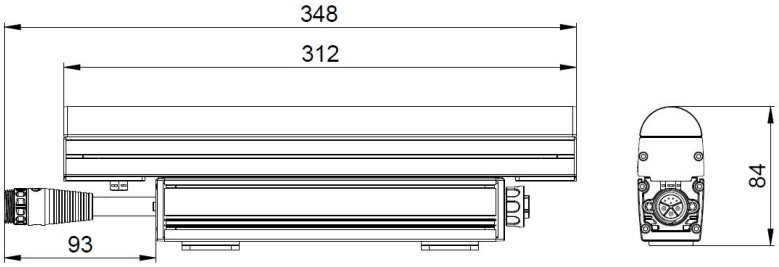


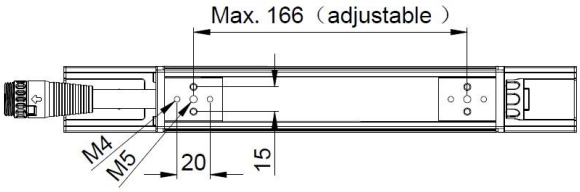


### *Exterior Linear Pro QUAD DV 1 ft.*
### *with mounting bracket accessories*

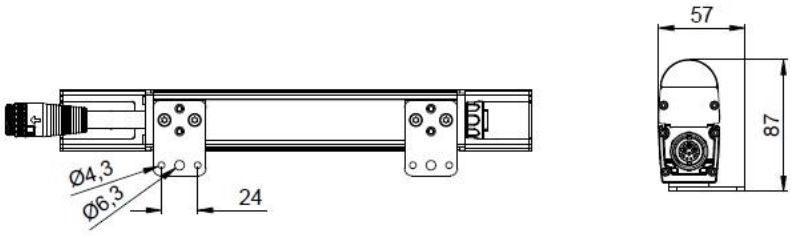


Flange bracket

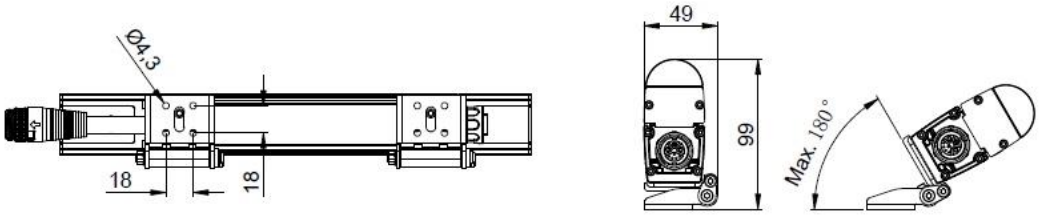


Adjustable bracket

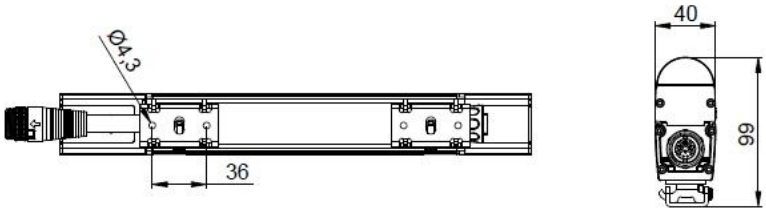


Quick mount bracket

### *Exterior Linear Pro QUAD DV 4 ft.*

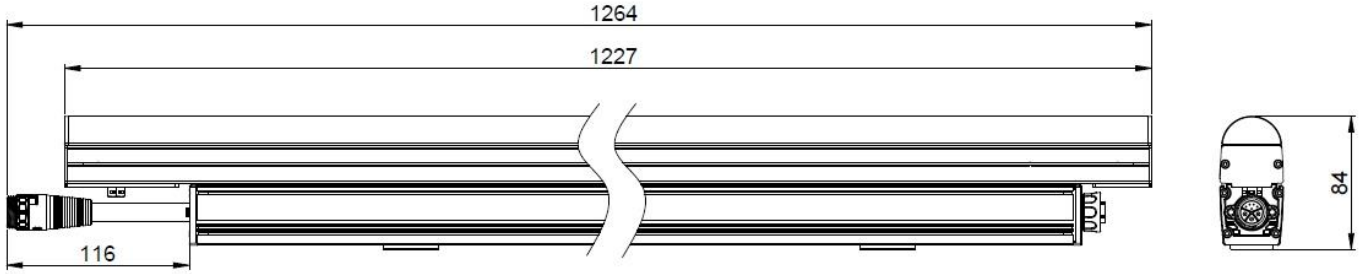


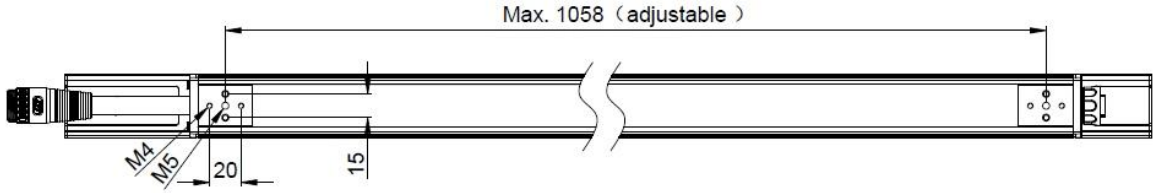


### *Exterior Linear Pro QUAD DV 4 ft.*
### *with mounting bracket accessories*

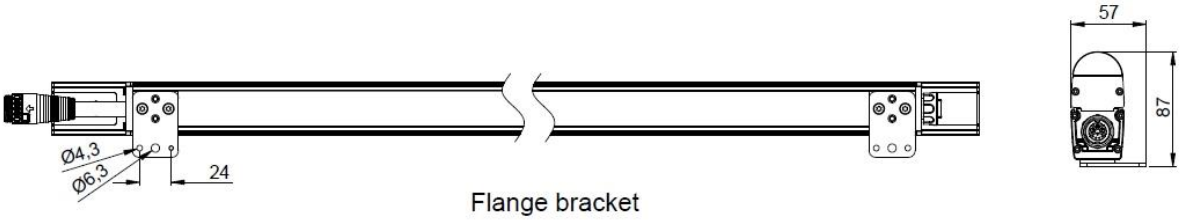


Flange bracket

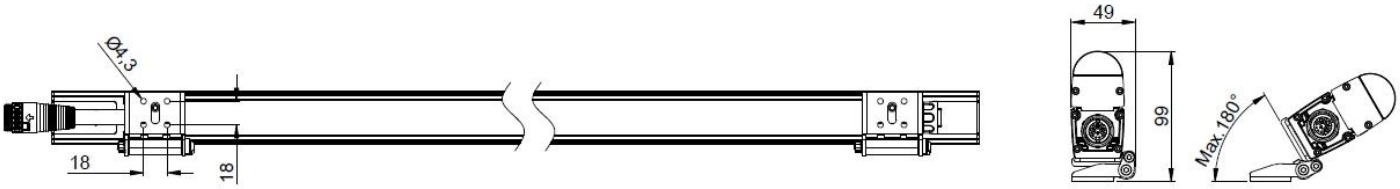


Adjustable bracket

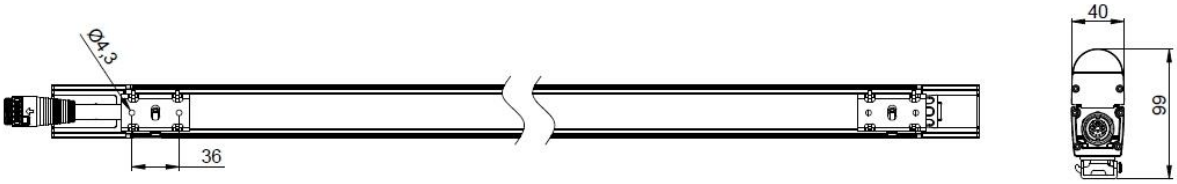


Quick mount bracket

## *Accessories*

### *Flange bracket*

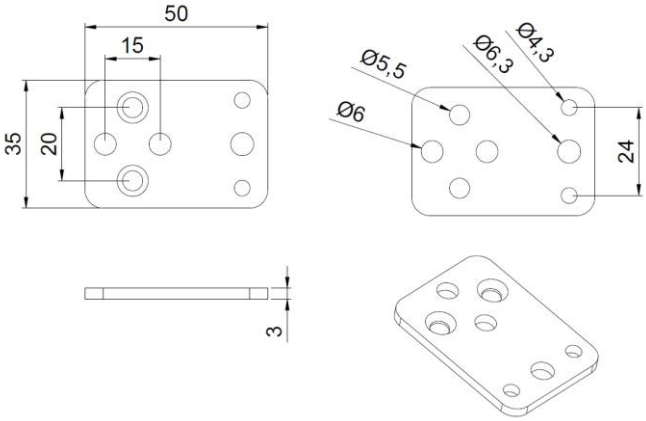


### *Junction box, power DMX to PD*

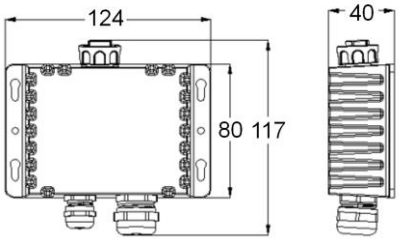


### *Quick mount bracket*

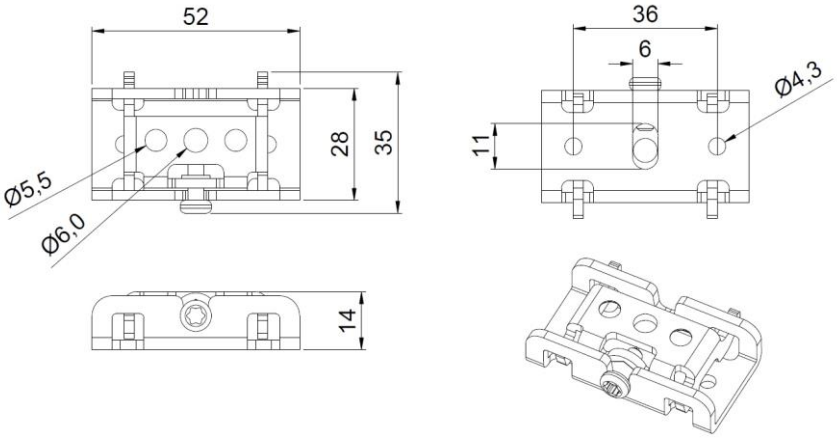


### *Adjustable bracket*

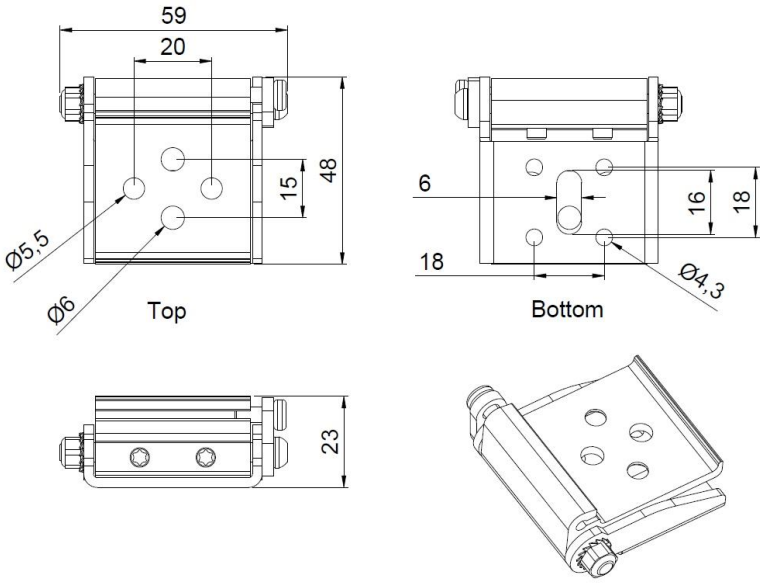

# Safety information

**WARNING!**

**Read the safety precautions in this manual before installing, operating or servicing this product.**

The following symbols are used to identify important safety information on the product and in this manual:

| Warning! | Warning! | Warning! | Warning! | Warning! | Warning! |
|---|---|---|---|---|---|
| ***Safety hazard. Risk of severe injury or death.*** | ***Powerful light emission. Risk of eye injury.*** | ***See user documentation for important safety information.*** | ***Hazardous voltage. Risk of lethal or severe electric shock.*** | ***Fire hazard.*** | ***Hot surfaces.*** |

**Warning!** Risk Group 2 product according to EN 62471. This product produces intense light output that may be hazardous if suitable precautions are not taken. Do not view the light output with optical instruments or any device that may concentrate the beam. Do not stare directly into the beam.

This product presents risks of severe injury or death due to fire and burn hazards, electric shock and falls if the safety precautions in this manual are not followed.

**Read this manual** before installing, powering or servicing the fixture. Follow the safety precautions and note all warnings and information in this Safety and Installation Manual, in the Exterior Linear Pro User Manual and printed on the fixture.

The latest versions of this Safety and Installation Manual and the Exterior Linear Pro User Manual are available for download from the Exterior Linear Pro area of the Martin® website at www.martin.com. Before you install, operate or service the fixture, check the Martin website and make sure that you have the latest user documentation for the fixture. Document revisions are indicated at the bottom of page 2.

This product is for professional use only. It is not for household use. Respect all locally applicable laws, codes and regulations when installing, powering, operating or servicing the fixture. Install, operate and service Martin products and accessories only as directed in their user documentation, or you may create a safety hazard or cause damage that is not covered by product warranties.

The latest software, manuals and other documentation for all Martin products are available for download at www.martin.com

**Technical Support**

If you have questions about how to install or operate the fixture safely, please contact Harman Professional Technical support:

- For technical support in North America, please contact ProTechSupportUSA@harman.com, phone: (844) 776-4899
- For technical support outside North America, please contact your national distributor.

**Protection from electric shock**

Ensure that the fixture is electrically connected to ground (earth).

Disconnect the fixture from AC power when not in use.

Shut down power to the entire installation at the main power distribution board and lock out power before connecting or disconnecting cables and before carrying out any other installation or maintenance work.

Do not connect or disconnect a live hybrid (power + data) cable.

The fixture accepts AC power at 100 - 277 V nominal, 50 or 60 Hz. Do not connect it to power at any other voltage or frequency.

Use only a source of AC power that complies with local building and electrical codes and has both overload and ground-fault (earth-fault) protection.

Use a cable with 15 AWG / 2.5 $mm^2$ minimum conductor size to connect the junction box to AC power.

Isolate the fixture from power immediately if any seal, cover, cable, or other component is damaged, defective, deformed or showing signs of overheating. Do not reapply power until repairs have been completed.

Before using the fixture, check that all power distribution equipment and cables are in perfect condition, are rated for the current requirements of all connected devices, are protected to IP66 minimum and are of suitable type for the location (including water, pollution, temperature and UV resistance).

Do not immerse the fixture in water or any other fluid.

Do not install the fixture in a location where flooding may occur.

Do not open the fixture or remove any cover. Refer any service operation not described in this manual to an authorized Martin Service partner.

The light source in this fixture is not user-replaceable. When the light source LEDs reach the end of their service life, they may be replaced only by Martin Service or an authorized Martin Service agent.

The external flexible cable (cord) of this fixture cannot be replaced. If the cord is damaged, the fixture must be sent to Martin Service or an authorized Martin Service agent for repair.

**Protection from burns and fire**

Do not operate the fixture if the ambient temperature (Ta) exceeds 45° C (113° F).

The surface of the fixture can reach up to 65° C (149° F) if the fixture is operated at the maximum permitted ambient temperature. Ensure that accidental physical contact with the fixture is impossible. Allow the fixture to cool for at least 5 minutes before handling.

Do not aim the fixture towards combustible materials (fabric, wood, paper etc.) that are within 10 cm (4 in.) of the fixture.

Keep the fixture well away from flammable materials (volatile liquids etc.).

Allow at least 2 cm (3/4 in.) free space around the fixture. Ensure that there is free and unobstructed airflow around the fixture.

Do not attempt to bypass thermostatic switches or fuses.

Do not modify the fixture in any way not described in this manual or install other than genuine Martin parts. Do not stick filters, masks or other materials onto any lens or other optical component. Use only accessories approved by Martin to modify the light output.

**Protection from eye injury**

Exterior Linear Pro fixtures fall into the following risk groups according to EN 62471 at the distances indicated:

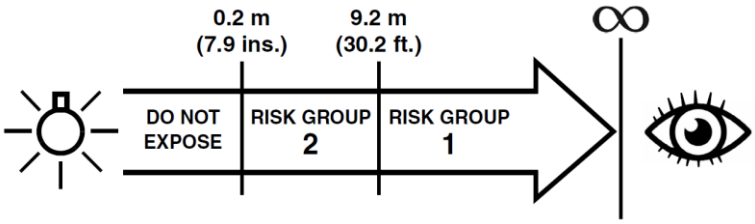


The risk group distances given above apply to the light output from one fixture only. If fixtures are operated in combination, light intensity can increase. In this case consult a lighting professional for safety recommendations.

Position the fixture so that prolonged staring into the light output at less than 9.2 m (30.2 ft.) from the fixture is not expected.

Do not look directly into the fixture's light output.

Do not look at the light output with magnifiers, telescopes, binoculars or similar optical instruments that may concentrate the light output.

Ensure that persons are not looking directly into the front of the fixture when the product lights up suddenly. This can happen when power is applied, when the product receives a DMX signal, or when an RDM command is sent to the fixture.

Shut down power to the fixture when the fixture is not in use.

Provide well-lit conditions to reduce the pupil diameter of anyone working on or near the fixture.

Wear protective glasses and other PPE (personal protective equipment) when working on or near the fixture.

**Protection from injury**

Fasten the fixture securely to a fixed surface or structure when in use. The fixture is not portable when installed.

The EPA (Effective Projected Area) of all fixtures in the Exterior Linear Pro series is 0.04 m² (0.44 ft.$^2$) per foot (300 mm) of fixture length. Use this figure as a starting point when calculating the wind resistance requirements of supporting structures.

The weight of the fixtures in the Exterior Linear Pro series is as follows:

- All models, 1.02 ft. (312 mm) version: 0.85 kg (1.9 lbs.)
- All models, 4.02 ft. (1227 mm) version: 2.8 kg (6.2 lbs.)

Ensure that all supporting structures, surfaces, fasteners and lifting equipment can bear the weight of all the devices that they are intended to support plus an adequate safety margin, and that they conform to all local building and safety regulations.

Ensure that any accessory such as a glare shield is securely fastened so that it cannot fall, causing injury or damage.

Freely hanging cables present a safety hazard. To reduce the risk of injury, fix all flexible wiring connected to this luminaire effectively to the installation surface or structure if the wiring is within arm's reach.

Block access below the work area and work from a stable platform whenever installing, setting up, adjusting, servicing or cleaning the fixture.

Do not operate the fixture with missing or damaged covers, shields or any optical component.

If an operating problem occurs, stop using the fixture immediately and disconnect it from power. Do not attempt to use a fixture that is obviously damaged.

# Introduction

The Exterior Linear Pro Series from Martin® is a line of rugged LED-based outdoor lighting fixtures that are available in the following configurations:

### QUAD variants

Exterior Linear Pro QUAD variants feature RGBW LEDs and offer RGB control with automatic addition of White. They have 8 x LEDs per foot (30 cm). QUAD fixtures have a dedicated color temperature control channel which accurately follows the black body curve and allows lighting designers to set their favorite default color temperature.

QUAD fixtures are available in the following models:

- **Graze** (15° native beam angle)
- **Cove** (100° native beam angle)
- **DV** (Direct View with round diffuser)

### CTC variants

Exterior Linear Pro Controllable Color Temperature (CTC) variants feature even higher light quality and efficacy than QUAD variants. They offer white CT mixing with 3 x discrete color LEDs (2700 K, 4000 K and 6500 K) for high efficacy, with 12 x LEDs per foot (30 cm).

CTC fixtures are available in the following models:

- **Graze** (9° native beam angle)
- **Cove** (100° native beam angle)

## General information

See the Martin website at www.martin.com for technical specifications for the Exterior Linear Pro series.

### Variants

All fixtures are available in **1.02 ft.** (312 mm) and **4.02 ft.** (1227 mm) lengths.

Besides these two length options, three types of fixture are available:

- **Cove** variants are designed for a range of indirect lighting applications.
- **Graze** variants are designed for illumination of walls or other surfaces.
- **DV** variants are designed for direct viewing and feature 6-inch (15 cm) segment control for low-resolution content.

### Mounting brackets

Fixtures are supplied with sliding plates on the rear of the housing that accept the different types of mounting bracket that are available from Martin as accessories (see the Exterior Linear Pro area of the Martin website at www.martin.com for details). Brackets are sold separately from fixtures so that you can choose the type of bracket that best matches a specific installation or location. The sliding plate system also allows for easy design of custom brackets to cover special installation needs.

### Asymmetric diffusers for Graze variants

Microlens asymmetric diffuser film accessories are available for Graze variants only. The diffusers give additional beam angle options. See the photometrics information in the Exterior Linear Pro area of the Martin website at www.martin.com for details.

## Before using the product for the first time

1. Read the ‘Safety information’ chapter starting on page 8 before installing, operating or servicing the fixture.
2. Unpack and ensure that there is no transportation damage before using the fixture. Do not attempt to operate a damaged fixture.
3. Before operating, ensure that the voltage and frequency of the power supply match the power requirements of the fixture.
4. Remove the protective film from the front lens when you have finished installing the fixture.
5. If fixtures are exposed to a sudden temperature change, give them time to warm or cool to the ambient temperature before applying power. This will help avoid damage due to condensation.
6. Check the support pages on the Martin Professional website at www.martin.com for the most recent user documentation and technical information about the fixture. Martin user manual revisions are identified by the revision letter at the bottom of the inside cover.

# Physical installation

**Warning!** Read the ‘Safety information’ chapter starting on page 8 before installing, operating or servicing the fixture.

**Warning!** The safety and suitability of lifting equipment, installation location, anchoring method, mounting hardware and electrical installation are the responsibility of the installer. All local safety regulations and legal requirements must be observed when installing and connecting the Exterior Linear Pro Series. Installation must be carried out by qualified professionals only.

**Warning!** Install the *Martin Junction Box Power Data to PD* so that cables enter it horizontally. This will minimize the risk of water pooling at cable glands.

**Important!** See the dimensions drawings at the beginning of this manual.

**Important!** Allow for thermal expansion by leaving 2 mm (0.08 in.) free space at the ends of fixtures and between fixtures installed in a line. The cable tails on fixtures are designed to give a distance of 2 - 3 mm between fixtures.

Contact your Martin supplier for assistance if you have any questions about how to install this fixture safely.

## Fixture location

Exterior Linear Pro fixtures are intended for outdoor use. With an IP rating of 66, they are dust-resistant and able to withstand powerful water jets, but they are not submersible. Fixtures require free and unobstructed airflow around them to ensure adequate cooling.

Observe the following limitations in selecting a location:

- Respect the limitations listed in the ‘Safety information’ chapter starting on page 8.
- Do not allow water to collect on or near the pressure relief valve located on the rear of the fixture behind the cable tail (see drawing on right). Do not install the fixture in such a way that water can form a pool covering the valve membrane.
- Ensure sufficient drainage to cope with the heaviest rainfall. Make sure that water can drain away from the installation area at least as fast as it can enter it.
- Do not bury or locate the fixture in an unventilated space.
- If the fixture is operated at the maximum permitted ambient temperature, the housing can reach a temperature of up to 65° C (149° F). Restrict public access or locate the fixture so that it cannot accidentally be touched.

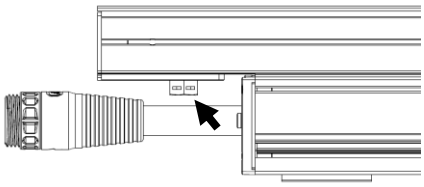

## Mounting the fixture

**Warning!** All fasteners used to mount Exterior Linear Pro fixtures must be corrosion-resistant and strong enough to mount the fixture safely. Install a washer directly under the head of each fastener when anchoring mounting brackets to the installation surface.

**Warning!** When fastening fixtures to a surface or structure using the sliding plates in the back of fixtures, either alone or in combination with mounting brackets, use a minimum of two (2) sliding plates per fixture

The fixture can be mounted in any orientation.

The fixture and mounting brackets must be securely fastened to a suitable surface or structure that can safely support the weight of all fixtures, cables and accessories. using suitable mechanical fasteners. Do not stand a fixture on a surface or leave it where it can be moved or fall over. Fasteners must be high-strength, corrosion-resistant (recommended minimum properties: stainless steel A4-70 grade according to ISO 3506 or steel grade 8.8 according to ISO 898-1). Any nuts used must be self-locking.

Refer to ‘Interconnecting a chain of fixtures’ on page 17 when connecting each fixture’s hybrid (power and data) input to the output of the previous fixture.

Leave a minimum of 2 mm (0.08 in.) free space at the end of each fixture and between fixtures installed in a line in order to allow for thermal expansion.

The fixture, sliding plates in the rear of the fixture, and mounting bracket accessories from Martin are manufactured in corrosion-resistant anodized aluminum. Avoid direct contact with other types of metal, as this can cause galvanic corrosion.

- When fastening a mounting bracket or fixture to a metal surface that is not anodized aluminum, use an electrically insulating material (such as rubber or plastic) or coating between the mounting bracket and the other metal.
- Use a non-conductive coating such as Delta Seal on fasteners (screws, bolts, washers, etc.) where they come into contact with the mounting bracket.

Installing fixtures will usually be easiest if you make the power/data connection each time you add a new fixture to the installation. See 'Interconnecting a chain of fixtures' on page 17.

Fixtures are supplied with a film stuck to the front lens to protect from scratches. Remove this protective film when you have finished installing the fixture.

You can use the glare shield accessory described later in this manual to help you install a row of fixtures in a straight line.

## Mounting bracket accessories

See illustration below. Exterior Linear Pro fixtures are supplied with sliding brackets **A** on the back of the fixture. The sliding brackets are designed to let you mount the fixture using the bracket accessories available from Martin (see the Exterior Linear Pro area of the Martin website at www.martin.com):

- Flange Brackets (**B**)
- Quick-Mount Brackets (**C**)
- Adjustable Brackets (**D**)

Before you install mounting bracket accessories on fixtures, plan the installation so that the sliding plates **A** in the back of fixtures will be evenly spaced with one plate close to each end of the fixture. Do not install the sliding plates where they will be exposed to significant lateral twisting forces (do not install two plates at one end of a fixture where the weight of the fixture will twist them, for example).

Fasten each sliding plate into its channel in the back of the fixture before you install a bracket accessory.

***Figure 1. Mounting bracket accessories***

### Flange brackets

To mount the fixture using the Flange Brackets available from Martin for the Exterior Linear Pro:

1. See **B** in Figure 1. Fasten a flange bracket **B** securely to each sliding plate **A** in the back of the fixture using the two screws supplied with the bracket.
2. Hold the fixture up to the mounting surface or structure and fasten each flange bracket securely to the surface or structure using one or more suitable screws or bolts that can safely hold the weight that they will support. Check that the fixture is held safely and securely.
3. If convenient, prepare the connection to the next fixture.

## Adjustable brackets

To mount the fixture using the adjustable brackets available from Martin for the Exterior Linear Pro:

1. See **D** in Figure 1. Fasten each adjustable bracket **D** securely to a sliding plate **A** in the back of the fixture using the two screws supplied with the bracket.
2. Hold the fixture up to the mounting surface and fasten each adjustable bracket securely to the mounting surface or structure using one or more suitable screws or bolts that can safely hold the weight that they will support.
3. See Figure 2. Tighten the Torx 20 locking screw **E** on both brackets to lock the brackets in position and hold the fixture securely at the desired angle. Check that the fixture is held safely and securely.
4. If the Adjustable Bracket ever becomes loose (this would only happen after several adjustments), tightening the Torx 25 pivot screw **F** will restore the correct tension.
5. If convenient, prepare the connection to the next fixture.

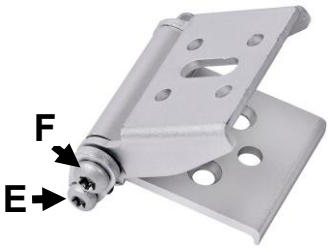


***Figure 2. Adjustable Bracket locking screw***

## Quick-mount brackets

To mount the fixture using the Quick-mount Brackets available from Martin for the Exterior Linear Pro:

1. Use Figure 3. as a guide. Fasten each fixture bracket **H** securely to a sliding plate **A** in the back of the fixture using the two screws supplied with the bracket.
2. Mark up the mounting surface so that you can install wall brackets **G** on the surface. Make sure that you can line up each wall bracket **G** with a fixture bracket **H**. Install each wall bracket **G** securely on the mounting surface or structure using one or more suitable screws or bolts that can safely hold the weight that they will support.
3. Insert the hooks in each fixture bracket **H** into the corresponding cutouts in a wall bracket **G**, lift the fixture up so that the locking bolt **I** engages in the corresponding slot in the top of the wall bracket **G**.
4. Tighten the locking bolt **I** so that the fixture is held safely and securely.
5. If convenient, prepare the connection to the next fixture.

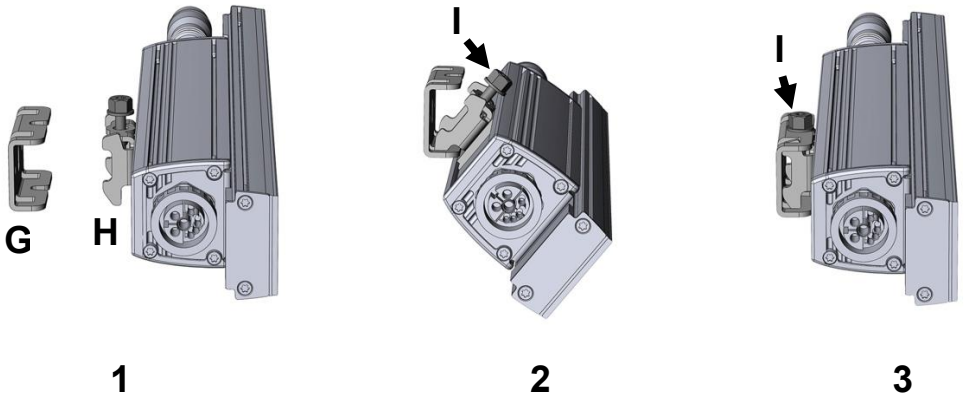


***Figure 3. Quick-mount bracket installation***

# AC power and data connection

**Warning!** Read the ‘Safety information’ chapter starting on page 8 before installing, operating or servicing the fixture.

**Warning!** Make sure that cables from fixtures open into dry areas (e.g. junction boxes in dry locations). If there is a break or cut at any point in a cable (for example at a connection point), and if this is exposed to water, moisture can be drawn up the inside of the cable due to the vacuum effect of temperature fluctuations during operation. Ensure that the fixture is protected from the entry of water via the power cable by using IP66-rated connectors or junction boxes, or by protecting connectors with weatherproof housings.

**Warning!** There is no power on/off switch. Power is applied to the fixtures as soon as they are connected to power. Provide a means to disconnect or shut down power to fixtures that is easily accessible and is located close to the fixtures.

**Important!** Do not use an external dimming system to supply power to the fixture, as this may cause damage to the fixture that is not covered by the product warranty.

## Power requirements

Exterior Linear Pro fixtures must be supplied with AC mains power at 100 - 277 V nominal, 50/60 Hz, using either a grounded single-phase (live, neutral, ground/earth) distribution system or one phase of a grounded three-phase (3 live phases, neutral, ground/earth) distribution system.

## Safety limits for chains of fixtures

**Warning!** Read this section carefully and respect the safety limits given, or you may create a risk of fire or electric shock. Consult your Martin supplier if you have any questions about installation safety.

**Maximum length of chain and number of fixtures**

The maximum permitted total length of any line of fixtures that you can connect to AC mains power in one daisy-chain is **150 m (492 ft.),** including fixtures and cable.

The maximum permitted total number of fixtures, excluding cable, that you can connect to AC mains power in one daisy-chain varies depending on the AC mains power voltage, length of the fixtures, the wattage mode of the fixtures and the DMX mode the fixtures are set to. The table below shows the maximum permitted number of fixtures per daisy-chain taking these factors into account:

| AC mains power voltage | Number of fixtures in chain, 12-watt mode | | | Number of fixtures in chain, 10-watt mode | | | Number of fixtures in chain, 5-watt mode | | |
|---|---|---|---|---|---|---|---|---|---|
| | DMX Mode | 1ft. | 4ft. | DMX Mode | 1ft. | 4ft. | DMX Mode | 1ft. | 4ft. |
| 100-120 V | Raw | 42 | 24 | Raw | 42 | 30 | Raw | 42 | 42 |
| | Standard | 42 | 24 | Standard | 42 | 30 | Standard | 42 | 42 |
| | 1 Seg. | 42 | 24 | 1 Seg. | 42 | 30 | 1 Seg. | 42 | 42 |
| | 2/4 Seg. | 42 | 24 | 2/4 Seg. | 42 | 30 | 2/4 Seg. | 42 | 42 |
| | 8 Seg. | 42 | 21 | 8 Seg. | 42 | 21 | 8 Seg. | 42 | 21 |
| 220-277 V | Raw | 42 | 42 | Raw | 42 | 42 | Raw | 42 | 42 |
| | Standard | 42 | 42 | Standard | 42 | 42 | Standard | 42 | 42 |
| | 1 Seg. | 42 | 42 | 1 Seg. | 42 | 42 | 1 Seg. | 42 | 42 |
| | 2/4 Seg. | 42 | 42 | 2/4 Seg. | 42 | 42 | 2/4 Seg. | 42 | 42 |
| | 8 Seg. | 42 | 21 | 8 Seg. | 42 | 21 | 8 Seg. | 42 | 21 |

***Maximum number of fixtures connected to power in one daisy-chain***

## System layout

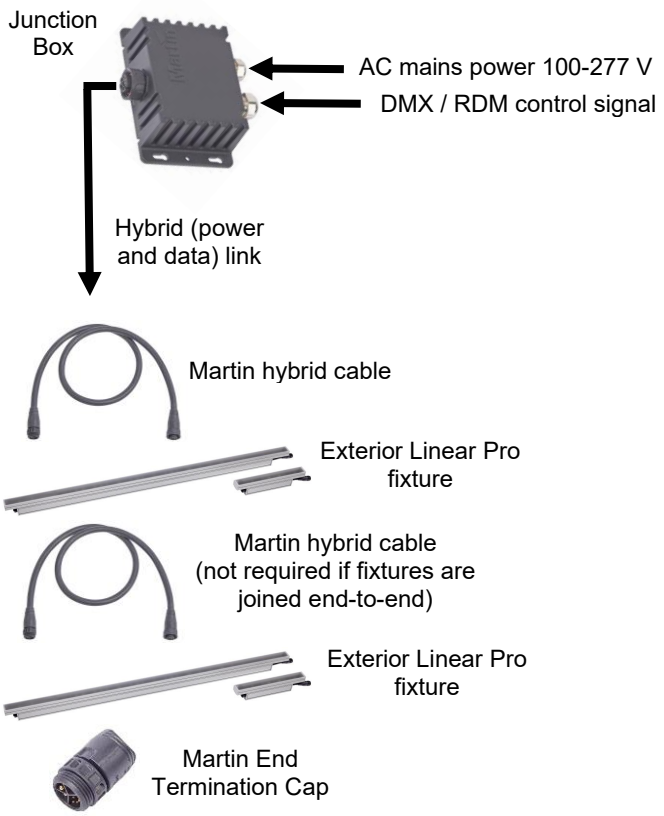


See illustration on left. An Exterior Linear Pro installation requires AC mains power at 100-277 V nominal, 50/60 Hz and control data from an RDM-compatible DMX controller.

Mains power and DMX/RDM control data are fed to a hybrid (combined power and data) connector inside a Martin Junction Box Power Data to PD.

Exterior Linear Pro fixtures are then connected in a daisy-chain using Martin hybrid cable with PD-type connectors that draws power and data from the hybrid connector on the junction box.

Finally, a Martin End Termination Cap must be installed on the unused THRU connector of the last fixture on the power and data link.

Hybrid cables are available from Martin in EU and US versions as accessories. Lengths of 0.2 m, 1 m, 2.5 m, 5 m and 10 m with pre-installed connectors are available, as well as rolls of 100 m of hybrid cable and bulk connectors. The Exterior Linear Pro area of the Martin website at www.martin.com gives full details of the junction box, cables and connectors available.

## Connecting via the Martin Junction Box

The Martin Junction Box Power DMX to PD lets you connect a fixture or chain of fixtures to AC mains power and to DMX/RDM data inside a protected, IP66-rated environment. Installing the junction box involves connecting the chain of fixtures to a pre-wired hybrid (power and data) connector and connecting the cables from the mains power and DMX/RDM data sources to terminal blocks inside the junction box.

### Connecting to the power and data sources

To connect the cables from the mains power and DMX/RDM data sources:

1. Fasten the junction box to a surface or structure using the screw holes in the flanges on the box. Install the box so that cables will enter the box *horizontally*. This will avoid water pooling at cable glands.
2. Use a three-conductor cable that is rated for the installation environment with conductor size AWG 15 / 2.5 mm2 minimum to supply the junction box with AC mains power. Make sure that power cannot be applied to the power cable during installation work.
3. See Figure 4. Lift the terminal blocks off their pins in the junction box to give easier access.
4. Strip insulation as necessary from the power cable and data cable, then pass the cables through their respective cable glands and into the junction box.

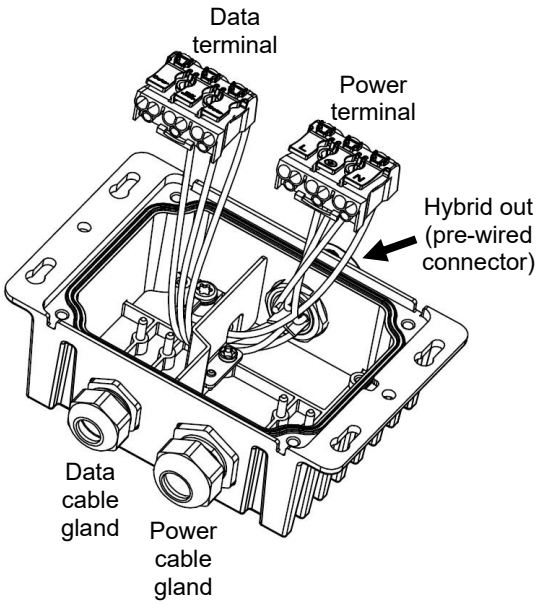


***Figure 4. Junction box connections***

5. Fasten wires into the power and data terminals respecting the following terminal markings:

   ***Data***

   - Data shield to **DMX common**
   - Data hot (+) to **Data +**
   - Data cold (-) to **Data -**

   ***Mains power***

   - Protective Earth to ⏚
   - Live (phase) to **L**
   - Neutral to **N**

   *See 'Mains power wire color coding' below for a guide to EU and US wire color coding systems.*
6. Re-position the terminal blocks on their pins in the junction box and tighten the cable glands to make a waterproof seal at the cable entries.
7. Fasten the cover onto the junction box to make a waterproof seal.

### Mains power wire color coding

| | Live or L | Neutral or N | Earth, Ground, PE or ⏚ |
|---|---|---|---|
| **US system** | Black | White | Green |
| **EU system** | Brown | Blue | Yellow/green |

### Connecting a chain of fixtures to power and data

To connect a daisy-chain of fixtures to mains power and DMX/RDM data, see illustration on right. Connect one of the hybrid (power and data) cables available as accessories from Martin to the hybrid connector (arrowed) on the Martin Junction Box and to the first fixture in the daisy chain.

To use hybrid connectors, position them so that the power and data pins line up and push the connectors together. Then tighten the locking ring on the female connector to create a seal.

## Interconnecting a chain of fixtures

You can connect fixtures to each other either:

- directly, hybrid input cable tail to hybrid throughput connector (see Figure 5) or
- using the hybrid extension cables listed in the Exterior Linear Pro area of the Martin website at www.martin.com.

If you use the bulk connectors available from Martin, follow the instructions supplied with the connectors.

When installing two fixtures at an angle to each other (a 90° angle at the corner of a square, for example), use a 20 cm (8 inch) hybrid extension cable to connect the fixtures to each other.

The cable tails on fixtures allow the required 2 mm / 0.08 in. thermal expansion gap between fixtures when installing them end-to-end.

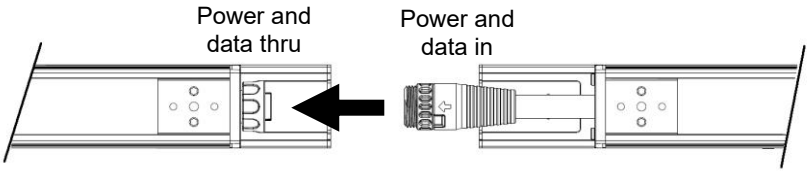


***Figure 5. Interconnecting fixtures***

To connect fixtures to each other:

1. Make sure that power cannot be applied to the installation. Do not connect or disconnect a hybrid cable that is live.
2. See Figure 5. Connect one fixture's throughput connector to the next fixture's input connector, either directly or with hybrid extension cables from Martin.
3. Install a termination cap in the throughput connector of the last fixture in the chain.
4. Check that all installation work is completed and carry out appropriate tests and safety checks before applying power.

## Data network requirements

Though other configurations are possible, the recommended configuration for the data network is to use one DMX universe for each chain of Exterior Linear Pro fixtures. The following considerations must be taken into account when laying out the data network:

- 512 DMX channels are available in a single DMX universe. Each time the combined channel requirements of a group of connected fixtures exceeds 512, an additional DMX universe will be required.
- You can reliably connect up to 42 Exterior Linear Pro fixtures in a single daisy chain using the proprietary Martin DMX interface.
- Use RS-485 data cable designed for exterior use. RS-485 cable has low capacitance and a characteristic impedance of 85 to 150 Ohms. It is electrically shielded and has at least 1 twisted pair of conductors. The minimum recommended wire size is 0.25 mm2 (24 AWG) for runs up to 200 meters (1000 ft.) and 0.32 mm2 (22 AWG) for runs up 500 meters (1640 ft).
- Each daisy-chain of fixtures must be terminated by installing an End Termination Cap on the throughput connector of the last fixture on the chain.
- Long parallel runs of AC power and control data cables may cause interference on the data link and must be avoided. Even if not required by law, use separate conduits for power and data cables.
- Make sure that data connections are totally protected from water, or the suction created by normal heating and cooling may suck moisture up the inside of the cable and into fixtures.
- Exterior Linear Pro fixtures and hybrid cables use the first data pair (data 1 + and data 1 - conductors) but do not use the second data pair allowed for in the DMX512-A standard.

The DMX transceiver of the Exterior Linear Pro fixture is insulated, SELV design to prevent ground loops and for safety reasons.

# Accessories

## Installing a glare shield

Glare shields designed to limit lateral glare in one direction are available from Martin in 1 ft. (300 mm) and 4 ft. (1200 mm) lengths for the Exterior Linear Pro. See details in the Exterior Linear Pro area of the Martin website at www.martin.com.

To install a glare shield, see illustration on right. Slide the glare shield into the channel in the side of the fixture and tighten the supplied screws through holes **A** in the glare shield and into holes **B** in the fixture.

You can use the glare shield accessory to help you install a row of fixtures connected end-to-end in a straight line. Temporarily slide the glare shield over two connected fixtures to carry out the alignment.

If you are using adjustable brackets, temporarily sliding the glare shield over two fixtures can also help you install fixtures at the same angle.

## Installing a louvre

Accessory louvres designed to limit all lateral glare are available from Martin in 1 ft. (300 mm) lengths for the Exterior Linear Pro. Different louvres are available to fit QUAD and CTC fixtures. See details in the Exterior Linear Pro area of the Martin website at www.martin.com.

*Louvre, QUAD fixtures*

*Louvre, CTC fixtures*

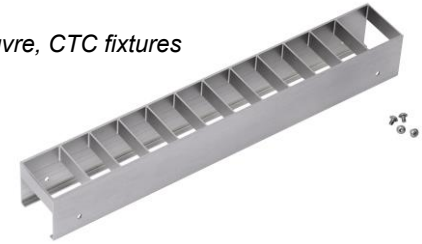

Louvres slide into accessory mounting channels in the fixture profile. To install a louvre:

1. See illustration on right (QUAD Graze 1 ft. fixture illustrated). Align the louvre with the mounting channel **A**.
2. Slide the louvre fully into the channel.
3. Secure the louvre by fastening the four screws supplied with each louvre through the louvre and into holes **B** in the fixture. Check that the louvre is held securely.

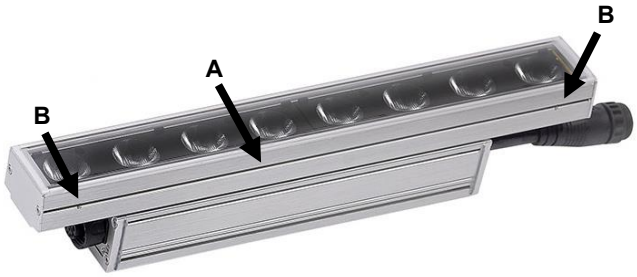

## Installing a microlens diffuser (Graze fixtures only)

Asymmetric microlens diffusers that give wider, softer light output are available from Martin as accessories for the Exterior Linear Pro QUAD and CTC Graze. See the Exterior Linear Pro area of the Martin website at www.martin.com for details. Diffuser films are supplied in 4 foot lengths that can be cut into 1 foot lengths if required.

The diffuser film slides into a mounting channel in the Graze fixture profile.

To install a microlens diffuser:

1. See illustration on right. Undo and remove the two screws **A** in either end of the fixture.
2. Remove the end cap **B** and waterproof seal **C** from the end of the fixture.
3. Align the diffuser film **D** with the mounting channel and slide the film fully into the channel. Make sure that the film slides <u>under</u> the tabs (arrowed) in the fixture.
4. Reinstall the seal **C**, end cap **B** and screws **A**.

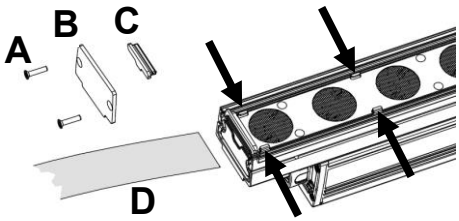

# Maintenance

**Warning!** There are no user-serviceable parts inside. Do not open the housing. Refer any service operation not described in this manual to Martin Professional or its authorized service agents.

The only service operation the user can carry out on Exterior Linear Pro fixtures is occasional cleaning.

Be aware that the output of LEDs, like all light sources, changes gradually over many thousands of hours of use. If you require products to perform to very precise color specifications, you may eventually need to make small readjustments at the lighting controller.

## Running test sequences

Exterior Linear Pro fixtures are programmed with a test sequence that is activated by 'swiping' (moving) a magnet past a magnetic switch inside the fixture. The magnetic switch is located on the side of the fixture, approximately halfway between the ends of the fixture. A magnet icon is provided on the fixture to show the correct location.

See illustration on right. We recommend that you use the Martin Service Tool to swipe and activate the magnetic switch.

Activating the magnetic switch lets you display the product's status and test the LEDs.

### Exterior Linear Pro QUAD models

Swiping a magnet past the magnetic switch causes the fixture to step through the following sequence:

1. Display status code (see table below for meaning).
2. All LEDs at full intensity.
3. All red LEDs at full intensity.
4. All green LEDs at full intensity.
5. All blue LEDs at full intensity.
6. All white LEDs at full intensity.
7. Exit sequence and resume normal operation.

You can also resume normal operation by cycling power off and on. If you are sending a DMX signal to the fixture, it will exit the sequence and enter normal DMX operation again after a short period.

Fixture status is indicated as follows:

| LED color | Signal | Status |
|---|---|---|
| Blue | Fast flash | Busy (booting or uploading SW) |
| Blue | Slow flash | No DMX detected |
| Green/blue | Alternating | Running normally in DMX mode |

### Exterior Linear Pro CTC models

Swiping a magnet past the magnetic switch causes the fixture to step through the following sequence:

1. Display status code (see table below for meaning).
2. All LEDs at full intensity.
3. All cold white LEDs at full intensity.
4. All neutral white LEDs at full intensity.
5. All warm white LEDs at full intensity.
6. Exit sequence and resume normal operation.

You can also resume normal operation by cycling power off and on. If you are sending a DMX signal to the fixture, it will exit the sequence and enter normal DMX operation again after a short period.

Fixture status is indicated as follows.

| LED color | Signal | Status |
|---|---|---|
| Cold | Fast flash | Busy (booting or uploading SW) |
| Cold | Slow flash | No DMX detected |
| Cold/warm | Alternating | Running normally in DMX mode |

# Managing humidity

Exterior Linear Pro fixtures are IP66-rated and are designed to resist water and moisture in environments with widely varying climate, temperature and humidity conditions. But if fixtures are not managed correctly during installation and service, water and moisture can enter, leading to humidity and condensation inside the fixtures. Follow the precautions in this chapter to avoid this problem.

### General

- Air, and even water, can be sucked along cables and into fixtures. A cracked or porous cable jacket can allow water into the cable. Replace any cable that is not in perfect condition. Make sure that cables from fixtures open into dry areas (e.g. junction boxes in dry locations).
- Do not clean fixtures with high-pressure water jets or immerse them.

### Pressure relief valve

A valve with a Gore-Tex membrane on the back of the fixture equalizes pressure by allowing air to pass through it when the fixture heats up and cools down, but at the same time it acts as a barrier to water in liquid form. The expulsion of warm air (with a slightly higher water vapor content) and intake of cool air (with a slightly lower water vapor content) prevents humidity buildup over time, provided that the valve works correctly and the fixture is correctly sealed.

Pressure relief valves have a limited service life. They become blocked over time as the micropores in the membrane fill with particles. When a valve becomes blocked, excess pressure can damage seals or cause air and even water to be sucked into the fixture along cables. A blocked valve cannot be cleaned and must be replaced if it shows any signs of contamination or is not in perfect condition.

For maximum fixture service life, have the pressure relief valve replaced after an extended period of use. Intervals for valve replacement depend on the installation environment. Please consult your Martin dealer about a suitable replacement schedule. To ensure optimum humidity control, valve replacement must be carried out by Martin Service.

# Cleaning

Regular cleaning is essential for fixture life and performance. Buildup of dust and dirt degrades the fixture’s light output and cooling ability.

Cleaning schedules will vary greatly depending on the operating environment. It is therefore impossible to specify precise cleaning intervals for the Exterior Linear Pro Series. Inspect fixtures within their first few weeks of operation to see whether cleaning is necessary. Check again at frequent intervals. This procedure will allow you to assess cleaning requirements in your particular situation. If in doubt, consult your Martin dealer about a suitable maintenance schedule.

Do not use products that contain solvents, abrasives or caustic agents for cleaning, as they can cause surface damage to the fixture. The aluminum housing and front glass can be cleaned with mild detergents such as those for washing cars.

To clean the housing and front glass:

1. Visually check that the silicone seals and the power and data cables are in good condition. If any seal or cable shows signs of damage, cracking or loss of water resistance, stop cleaning the fixture and contact a Martin authorized service technician for replacement.
2. If seals are in good condition, rinse off loose dirt with a hose or low-pressure water spray.
3. Wash the aluminum housing and front glass using warm water with a little mild detergent and a soft brush or sponge. Do not use abrasive cleaners.
4. Rinse with clean water and wipe dry.

## Approvals

This product has been tested and found to comply with the following standards:

- Global CB Certification/IECEE: IEC 60598-2-5 (IEC 60598-1)
- EU safety: EN 60598-2-5 (EN 60598-1), EN 62471, EN 62493
- EU EMC: EN 55015, EN 55032, EN 61547, EN 55035, EN 61000-3-2, EN 61000-3-3
- US safety: UL1598
- US EMC: FCC Part 15 Class B
- Canadian safety: CSA C22.2 No. 250.0
- Canadian EMC: ICES-003 Class B; ICES-005 Class B
- United Kingdom: UKCA
- Australia/NZ: RCM
- India: BIS IS 10322 (Part5/section5)
- Korea: KS C 9832, KS C 9835

## FCC Compliance

This device complies with part 15 of the FCC Rules. Operation is subject to the following two conditions:

1. This device may not cause harmful interference, and
2. this device must accept any interference received, including interference that may cause undesired operation.

This equipment has been tested and found to comply with the limits for a Class B digital device, pursuant to part 15 of the FCC Rules. These limits are designed to provide reasonable protection against harmful interference in a residential installation. This equipment generates, uses and can radiate radio frequency energy and, if not installed and used in accordance with the instructions, may cause harmful interference to radio communications. However, there is no guarantee that interference will not occur in a particular installation. If this equipment does cause harmful interference to radio or television reception, which can be determined by turning the equipment off and on, the user is encouraged to try to correct the interference by one or more of the following measures:

- Reorient or relocate the receiving antenna.
- Increase the separation between the equipment and receiver.
- Connect the equipment into an outlet on a circuit different from that to which the receiver is connected.
- Consult the dealer or an experienced radio/TV technician for help.

| | |
|---|---|
| 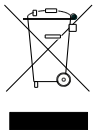 | **Disposing of this product**<br>Martin® products are supplied in compliance with Directive 2012/19/EC of the European Parliament and of the Council of the European Union on WEEE (Waste Electrical and Electronic Equipment), where applicable. Help preserve the environment! Ensure that this product is recycled at the end of its life. Your supplier can give details of local arrangements for the disposal of Martin products |