DCE DataSplitterBooster IP

INDOOR/OUTDOOR POWER POWER+DATA SPLITTER FOR MARTIN CREATIVE LED FIXTURES

SPEC SHEET

OVERVIEW

The Martin DCE DataSplitterBooster IP is an indoor/outdoor power+data splitter for Martin Creative LED fixtures that is ideal for rental and install applications. It can be used to split a power+data chain, which started at a P3 PowerPort, in two branches to facilitate easier cabling. Additionally, it can be used to extend the range of a power+data chain, allowing fixtures to be placed further away from the P3 PowerPort. The DCE DataSplitterBooster IP is powered by the P3 PowerPort and hence, does not require separate power input. It is fitted with DCE connectors for easy deployment and can be wall- or truss-mounted.

FEATURES

- Indoor/outdoor power+data splitter unit for Martin Creative LED fixtures
- Suitable for rental and install applications
- Can be used to split DCE power+data chain in two branches
- Can be used to extend range of power+data chain (fixtures further away from P3 PowerPort)
- Powered via DCE input from P3 PowerPort
- Fitted with DCE connectors for easy deployment
- Can be truss- or wall-mounted
- IP66 rated

ORDERING INFORMATION

- **DCE DataSplitterBooster IP:** .....P/N MAR-90721204

INCLUDED ITEMS

- 1x Multi-Language Safety & Installation Manual

RELATED ITEMS

- P3 PowerPort 2000.....P/N MAR-90721200
- P3 PowerPort 500 IP Rental .....P/N MAR-90721201
- P3 PowerPort 500 IP Install ..... P/N MAR-90721202
- DCE PSU 240 IP .....P/N MAR-90721203

COMPATIBLE FIXTURES

- VDO Sceptron XB
- Exterior Dot-1 Pro (via Exterior DC-Feeder)
- Exterior Dot-4 Pro (via Exterior DC-Feeder)
- Exterior Dot-9 Pro (via Exterior DC-Feeder)
- Exterior Dot-HP Pro

HARMAN PROFESSIONAL INC. • 8500 BALBOA BOULEVARD • NORTHRIDGE • CA 91329 • USA • +1 818 893 8411

©2024 HARMAN Professional. All rights reserved. Martin® is a registered trademark of HARMAN Professional Inc. registered in the United States and/or other countries.
Features, specifications, and appearance are subject to change without notice. REV. 20260923

DCE DataSplitterBooster IP

INDOOR/OUTDOOR POWER POWER+DATA SPLITTER FOR MARTIN CREATIVE LED FIXTURES

SPEC SHEET

ACCESSORIES

Pre-Assembled Hybrid DCE Cables

- DC + Ethernet Cable DCE-DCE 1m: ..... P/N MAR-91700100
- DC + Ethernet Cable DCE-DCE 2.5m: ..... P/N MAR-91700101
- DC + Ethernet Cable DCE-DCE 5m: ..... P/N MAR-91700102
- DC + Ethernet Cable DCE-DCE 10m: ..... P/N MAR-91700103
- DC + Ethernet Cable DCE-DCE 25m: ..... P/N MAR-91700104

Bulk Hybrid DCE Cables

- DC + Ethernet Cable 100m: ..... P/N MAR-91700105
- DC + Ethernet Cable LSZH 100m: ..... P/N MAR-91700106

Field-Installable DCE Connectors

- Field-installable Connector DCE Male:..... P/N MAR-91700107
- Field-installable Connector DCE Female: ..... P/N MAR-91700108

Closing Caps for DCE Connectors

- Closing Cap Male DCE Connector:..... P/N MAR-91700109
- Closing Cap Female DCE Connector:..... P/N MAR-91700110

Hybrid DCE Adapters

- DC + Ethernet Adapter DCE Male-Male:..... P/N MAR-91700111
- DC + Ethernet Adapter DCE Female-Female: ... P/N MAR-91700112
- DC + Ethernet Adapter EtherCON+Wires to DCE:..... P/N MAR-91700113
- DC + Ethernet Adapter DCE to EtherCON: ..... P/N MAR-91700114

Rigging Accessories

- Super Lightweight Half Coupler Rigging Clamp, black:..... P/N MAR-91602018
- Safety Cable, SWL 60 kg, BGV C1 / DGUV 17, black:..... P/N MAR-91604006
- Safety Cable, SWL 60 kg, BGV C1 / DGUV 17, silver:..... P/N MAR-91604007

TECHNICAL SPECIFICATIONS

DATA INTERFACES

Control Protocols:.....P3, sACN, Art-Net and RDM over Art-Net
Protocol Detection: .....Automatic
Art-Net Compliance:.....Art-Net 1, 2, 3 and 4; including RDM over Art-Net
sACN Compliance: .....ANSI E1.31 - 2018
Martin P3 Compliance: .....P3 System Controller Software 6.1.0 or newer
Ethernet Transceiver IN: 100Mbit
Ethernet Transceiver OUT 1-2:...100Mbit
Firmware Update:.....Not applicable

DATA SPLITTING & BOOSTING FUNCTIONALITY

Split:..... Split a DCE line in two branches
Boost:..... Extend maximum cable length between two devices from 90 m to 2x 90 m

POWER SPLITTING & BOOSTING FUNCTIONALITY

Split:..... Passive split of DCE 48 VDC input in two branches
Boost:..... None, system power limitations still apply

CONTROL/USER INTERFACE EXTERNAL

Power Status:..... 1x Green LED
Ethernet In Status:..... 1x Amber LED
Ethernet Out Status 1-2:..... 2x Amber LED

CONSTRUCTION

Color:..... Matte Black
Housing Material: ..... Aluminum
Protection Rating:..... IP 66
NEMA Enclosure Rating:..... Type 3
Impact Resistance: ..... IK 08
Corrosion Resistance:..... ISO 12944-6: 2018; C5 High, Test regime ISO 9227 , 1440h
Vibration Resistance:..... 1.0g Sinusoidal (IEC 60068-2-6) and 0.7g RMS Random (IEC 60068-2-64)

INSTALLATION

Orientation: ..... Any
Wallmount:..... Flanges for installation on flat surface
Trussmount:..... Using half-coupler clamp in M10 threaded hole, max. bolt length 20 mm
Location:..... Indoor or permanent outdoor

HARMAN PROFESSIONAL INC. • 8500 BALBOA BOULEVARD • NORTHRIDGE • CA 91329 • USA • +1 818 893 8411

©2024 HARMAN Professional. All rights reserved. Martin® is a registered trademark of HARMAN Professional Inc. registered in the United States and/or other countries.
Features, specifications, and appearance are subject to change without notice. REV. 20260923

DCE DataSplitterBooster IP

INDOOR/OUTDOOR POWER POWER+DATA SPLITTER FOR MARTIN CREATIVE LED FIXTURES

SPEC SHEET

TECHNICAL SPECIFICATIONS

CONNECTIONS

DC Power and Network input: ..... 1x chassis-mount DCE hybrid connector (7pin)

DC Power and Network output: ..... 2x chassis-mount DCE hybrid connector (7pin)

Max. distance between source (P3 PowerPort) or previous fixture and DCE DataSplitterBooster IP: ..... 90 m

Max. distance between DCE DataSplitterBooster IP and following fixture or next DCE DataSplitterBooster IP: ..... 90 m

Max. number of units in a daisy-chain: ..... Unlimited, unless limited by power consumption

Surge protection: ..... 4 KV

All connections hot plugging compatible

ELECTRICAL

Nominal Input Voltage: ..... 48 VDC +/- 10%

Power Supply Options ..... Martin P3 PowerPort 2000, Martin P3 PowerPort 500 IP Rental, Martin P3 PowerPort 500 IP Install, Martin DCE PSU 240 IP or generic 48 VDC PSU

Power Consumption:

Typical: ..... 0.9 W *

* Measurements made at nominal voltage. Allow for a deviation of +/- 10%.

THERMAL

Cooling: ..... Convection

Maximum Ambient Temperature (Ta max): ... 55° C (131° F)

Minimum Ambient Temperature (Ta min): ..... -30° C (-22° F)

Maximum Surface Temperature, steady state, at 40° C ambient: ..... 55° C (131° F)

Typical Heat Dissipation (calculated, +/- 10%): ..... 3 BTU/hr.

ENVIRONMENTAL

RoHS: ..... Compliant

REACH: ..... Compliant

WEEE: ..... Compliant

Proposition 65: ..... Compliant

APPROVALS

Global CB Certification/IECEE: ..... IEC 62368-1

EU safety: ..... EN 62368-1

EU EMC: ..... EN 55032, EN 55035, EN 61000-3-2, EN 61000-3-3

US safety: ..... UL 62368-1

US EMC: ..... FCC Part 15 Class B

Canadian safety: ..... CSA C22.2 No. 62368-1

Canadian EMC: ..... ICES-003 Class B

Australia/NZ: ..... RCM

United Kingdom: ..... UKCA

CONNECTIONS

Input Connector

Output Connectors

HARMAN PROFESSIONAL INC. • 8500 BALBOA BOULEVARD • NORTHRIDGE • CA 91329 • USA • +1 818 893 8411

©2024 HARMAN Professional. All rights reserved. Martin® is a registered trademark of HARMAN Professional Inc. registered in the United States and/or other countries.
Features, specifications, and appearance are subject to change without notice. REV. 20260923

DCE DataSplitterBooster IP

INDOOR/OUTDOOR POWER POWER+DATA SPLITTER FOR MARTIN CREATIVE LED FIXTURES

SPEC SHEET

DIMENSIONS

PHYSICAL

Width: ..... 124.0 mm (4.9 in.)
Height: ..... 40.0 mm (1.6 in.)
Depth: ..... 124.0 mm (4.9 in.)
Weight: ..... 0.5 kg (1.1 lbs.)

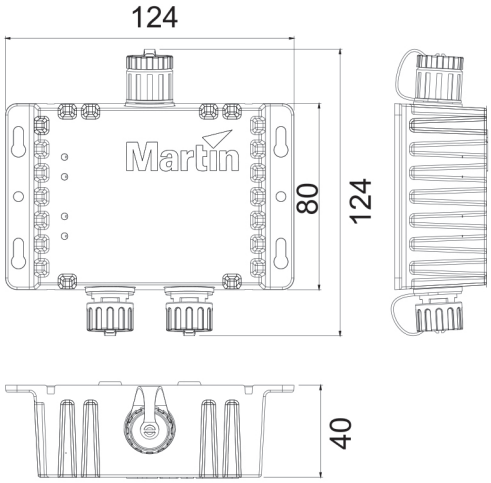

All measurements are in mm

MOUNTING OPTIONS

Wallmount

Trussmount

HARMAN PROFESSIONAL INC. • 8500 BALBOA BOULEVARD • NORTHRIDGE • CA 91329 • USA • +1 818 893 8411

©2024 HARMAN Professional. All rights reserved. Martin® is a registered trademark of HARMAN Professional Inc. registered in the United States and/or other countries.
Features, specifications, and appearance are subject to change without notice. REV. 20260923